SCHEMATIC LAYOUT OF THE ENGINE CONTROL SYSTEM
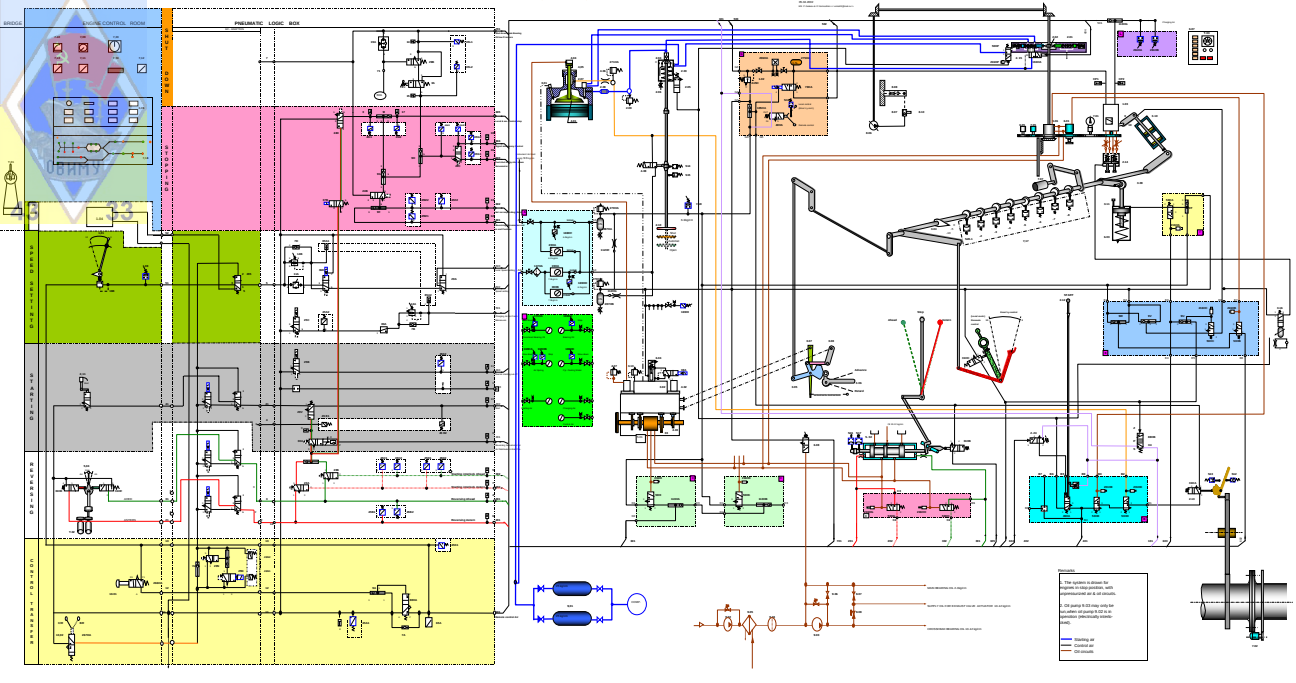
SULZER 6 RTA 62