Delcam Advanced Manufacturing Solutions

Powering your productivity

PowerMILL

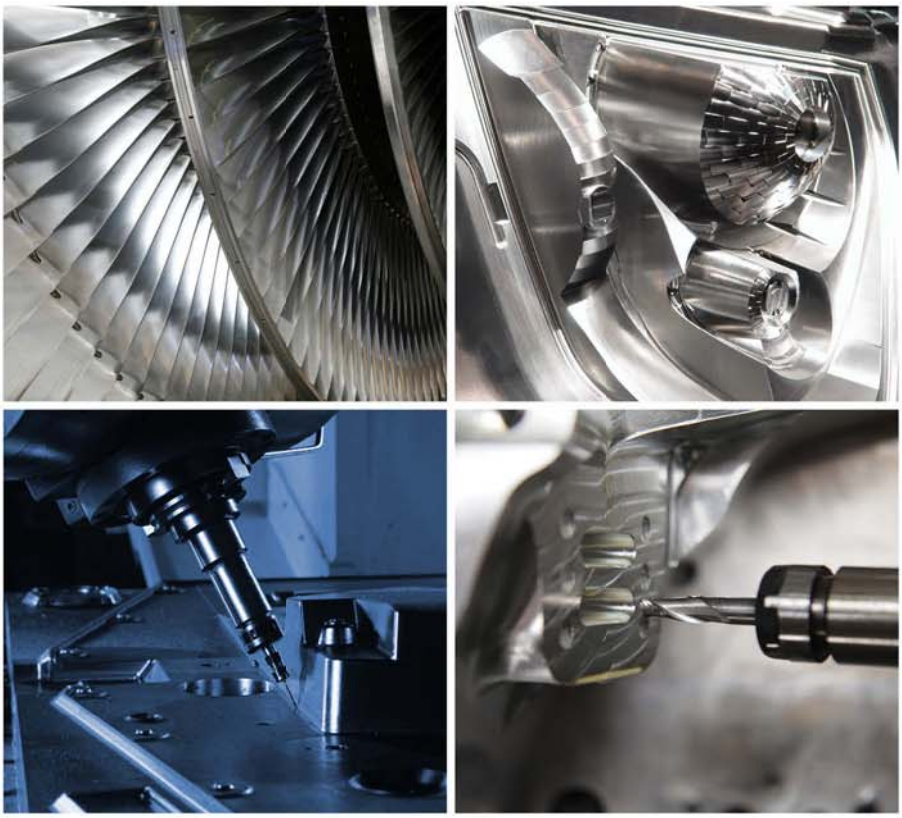

Training Course

Important Notice

This document is supplied as part of a Delcam Training Course. It is not intended to be distance-learning material: rather as an aid for Tutors when presenting material to course delegates and as a subsequent aid memoir to those delegates.

Delcam does not accept responsibility for any personal belongings / valuables whilst on the premises. Delegates are advised to keep their belongings on their person at all times.

Delcam plc. has no control over the use of the software described in this document and cannot accept any responsibility for any loss or damage howsoever caused as a result of using the software. Users are advised that all results from the software are checked by a competent person in accordance with good quality control procedures.

The software described in this document is furnished under a license agreement and may be used only in accordance with the terms of this license.

Copyright © 2014 – Delcam. All rights reserved.

PowerMILL 2016 Contents

	Chapters	Page Number
Day 1	1. Getting Started	1.1 - 1.26
	2. Machining Set Up in Detail	2.1 - 2.22
	3. Area Clearance Strategies	3.1 - 3.54
Day 2	4. Finish Machining Strategies	4.1 - 4.54
	5. Leads and Links	5.1 - 5.14
	6. Boundaries	6.1 - 6.32
Day 3	7. Levels and Sets	7.1 - 7.10
	8. Editing Toolpaths	8.1 - 8.24
	9. Collision Checking	9.1 - 9.14
	10. Patterns	10.1 - 10.18
Day 4	11. Curve Editor	11.1 - 11.12
	12. 2D Machining	12.1 - 12.48
	13. NC Programs	13.1 - 13.10
	14. Setup Sheets	14.1 - 14.8
Day 5	15. Specialist Finishing	15.1 - 15.38
	16. Component Thickness	16.1 - 16.22
	17. Stock Models	17.1 - 17.18
	18. Macros & User Menus	18.1 - 18.10
	19. Tutorials	19.1 - 19.36

Copyright © Delcam Ltd

Copyright © Delcam Ltd

1. Getting Started

This course covers the 3-Axis functionality available in **PowerMILL**. Additional **Five Axis** license options are covered on a separate course.

PowerMILL can quickly create gouge-free cutter paths on imported component data. It supports Wireframe, Triangle, Surface, and Solid models created by other Delcam products or from neutral formats such as IGES. If the relevant **Delcam Exchange** translators are purchased, **PowerMILL** will also directly import data created by other proprietary CAD packages.

Start PowerMILL

1 Double-click the **PowerMILL** shortcut on the desktop:

*On the training PC, the icon will be displayed as **PowerMILL**.*

The **PowerMILL** screen is displayed:

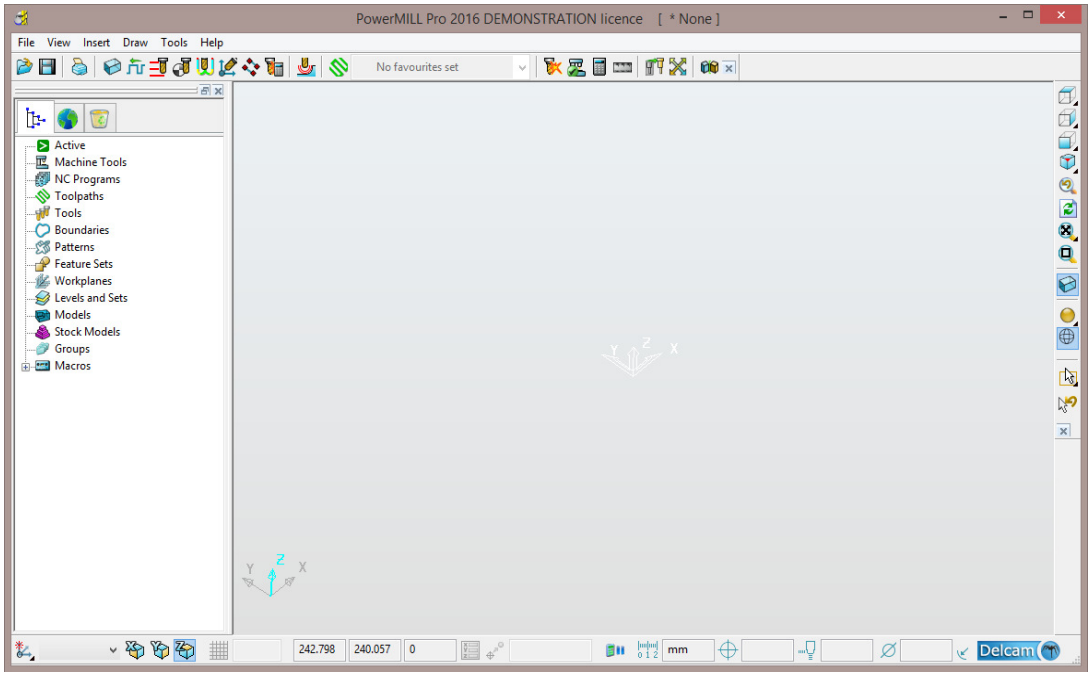

The screen is divided into the following main areas:

a **Main menu**

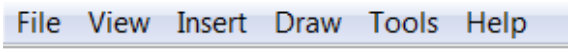

Click one of the menu names on this bar (for example, **File**) to open a pull-down menu list of associated commands and sub-menus. A sub-menu is indicated by a small arrow to the right of the text (for example **File - Recent Projects >**). Highlighting this arrow generates a list of commands/names specific to that sub-menu (for example, **File - Recent Projects** displays a list of recently opened projects that open directly when selected).

b **Main Toolbar** (shown un-docked)

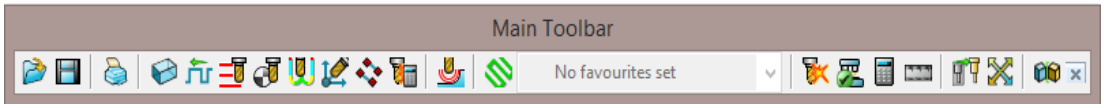

This provides quick access to the most commonly used commands in **PowerMILL**.

c **Explorer**

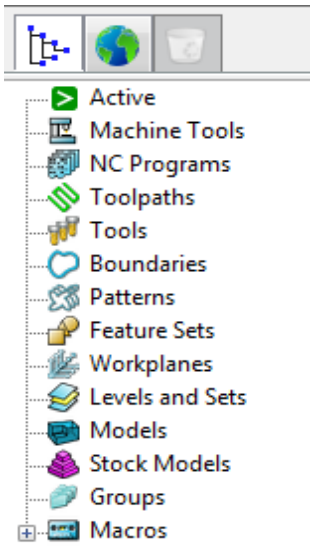

The **PowerMILL** ***explorer*** provides access and storage of **PowerMILL** entities created during the session.

d **Graphics Window**

This is the large, visual display area to the right of the **Explorer** (Look at the illustration on previous page).

e **View Toolbar** (shown as horizontal)

Provides quick access to standard view and shading options in **PowerMILL**.

f **Information Toolbar**

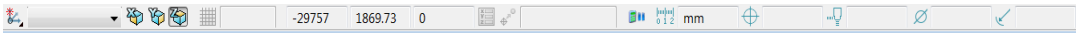

This area provides a reminder of some of the active setup options.

g **Tool Toolbar**

Facilitates the rapid creation of tools in **PowerMILL**.

Most available toolbars are not factory defaults, and are therefore not shown at initial start-up. To display any of these, select them under **View > Toolbar**.

 Copyright © Delcam Ltd

For example, select **View > Toolbar > Toolpath** to display the **Toolpath Toolbar**.

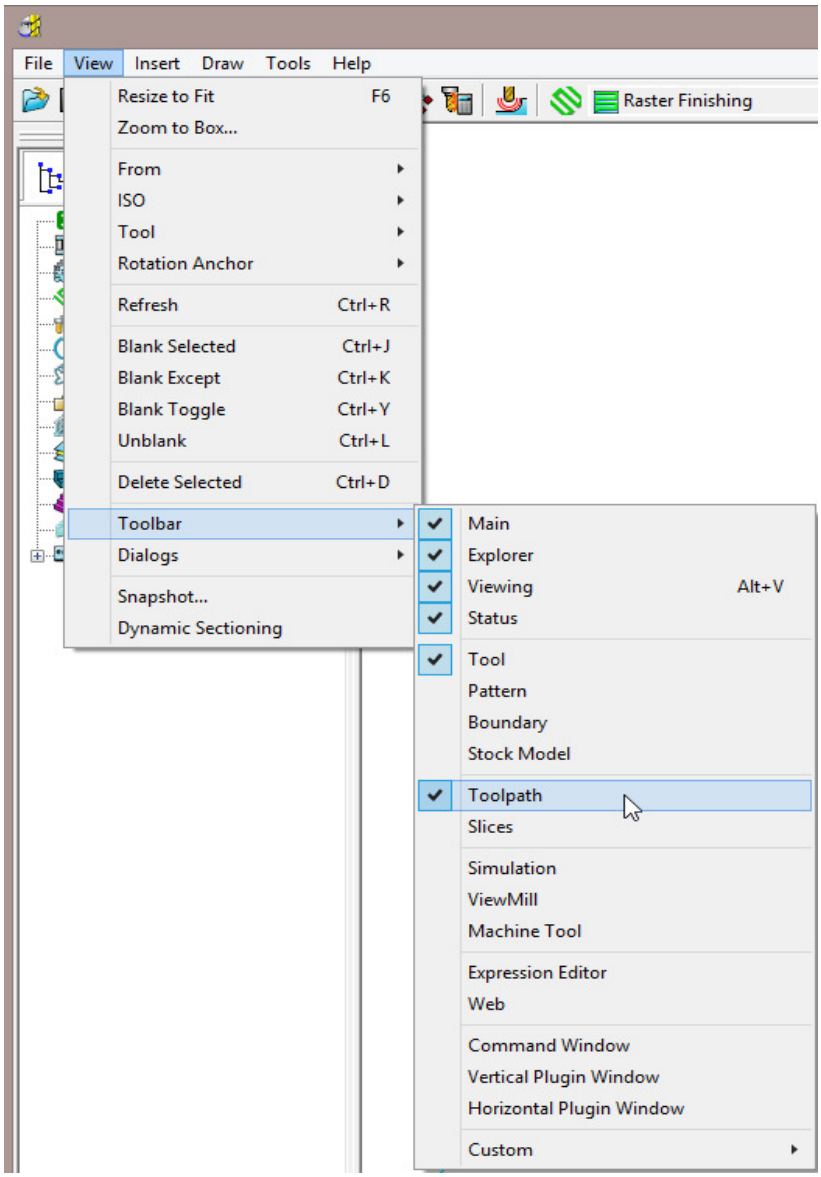

The **Toolpath** toolbar appears (as shown below).

Changing the Background Colour.

To change the background colour of the graphics area, select **Tools > Customise Colours** and from the dialog select **View Background**.

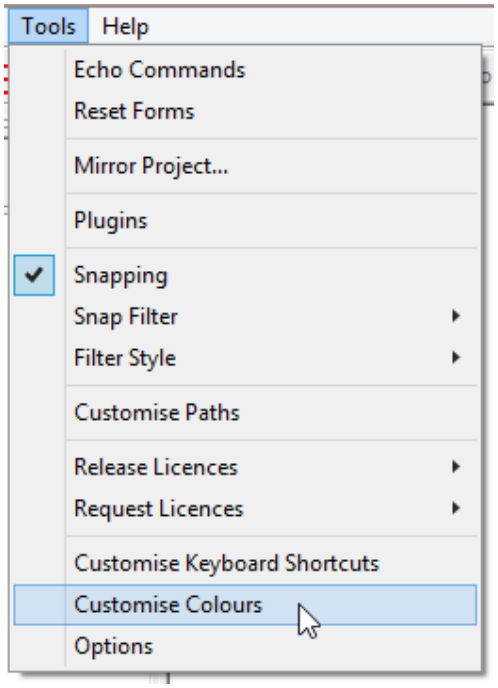

The Top and/or Bottom colours can be changed independently and reset using **Restore Defaults** to restore to the original settings:

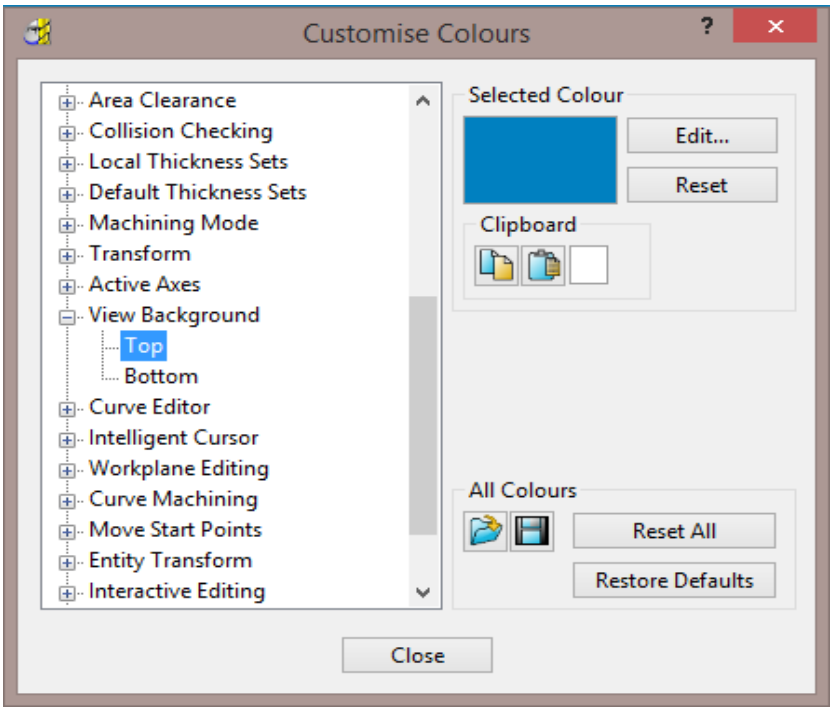

PowerMILL remembers **Toolbar** and ***colour selections*** from one session to the next. For example, if a **Toolbar** is open when the session is closed, it will appear the next time **PowerMILL** is opened.

 Copyright © Delcam Ltd

Mouse buttons

Each of the three mouse buttons performs a different dynamic operation in **PowerMILL**.

Mouse button 1: Pick and Select

This button is used for selecting items on menus, options on dialogs, and entities in the graphics area.

The method of selection is controlled by 2 options accessed from the **Viewing** toolbar, the default being Select using a **Box**.

Select using a box

If the cursor is positioned on an entity, such as part of a surface model, and if the mouse is clicked, then the item turns yellow indicating that it is selected.

If you select another surface, all currently selected items are de-selected.

- If you want to select more surfaces to add to the currently selected surface, then, while making selections, hold down the **Shift** key on your keyboard.
- If you want to remove a surface from your current selections, hold down the **Ctrl** key on your keyboard and click on the surface that you want to remove.

Select by dragging the cursor

Use this option to select multiple entities by dragging the cursor across the required items. This is ideal for quickly selecting multiple surfaces on a model. To deselect entities, press the **Ctrl** key when dragging across an entity.

Mouse button 2: Dynamics

- **Zooming in and out**: Hold down the **Ctrl** key and mouse button 2. Move the mouse up and down to zoom in and out.

- **Pan** around the model: Hold down the **Shift** key with mouse button 2. Move the mouse in the required direction.
- **Zoom Box**: Hold down the **Ctrl** and **Shift** key, drag a box around the area to zoom into using the middle mouse button.
- **Rotate mode**: Hold down mouse button 2 and move the mouse, and the rotation is centred about the tracker ball.
- **View Spinning**: Dynamically rotate the view and quickly release the mouse. The faster the mouse movement, the faster it will spin. This feature is switched off by default. Select **Tools > Options > View > 3D Graphics** and select the **Spin View** option to enable it.

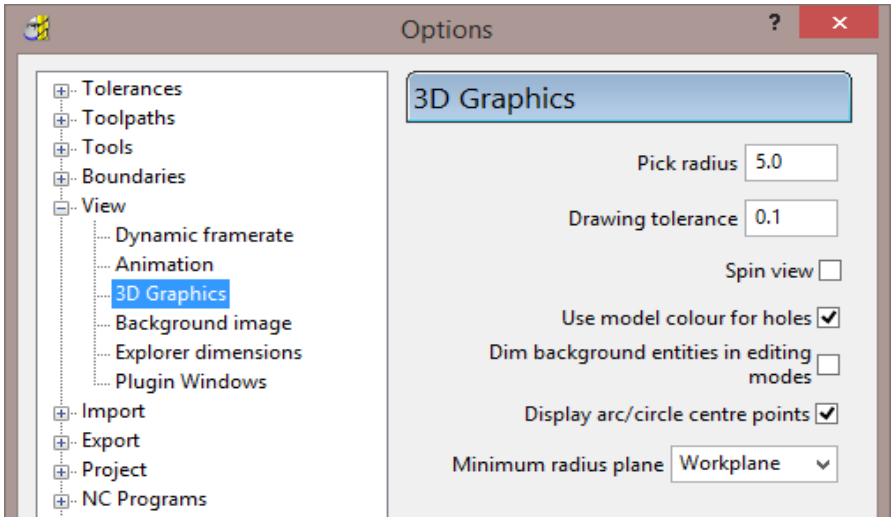

Mouse button 3: Special Menus & PowerMILL Explorer Options

When this button is pressed it brings up a local menu relating to whatever the mouse is over, such as a named item in the **PowerMILL explorer** or a physical entity in the graphics area. If nothing specific is selected, the View menu appears.

 Copyright © Delcam Ltd

HELP!

PowerMILL provides you with help in a number of ways:

- **Tooltips**: Place the mouse cursor over a menu button. A description is of what the button does is displayed.
- **Online Help**: Select Help > Contents from the Main Toolbar to access the online help documents. There is a full index and search facility provided.
- To see a summary of all new functionality available in the current version of **PowerMILL**, select Help > What's New.

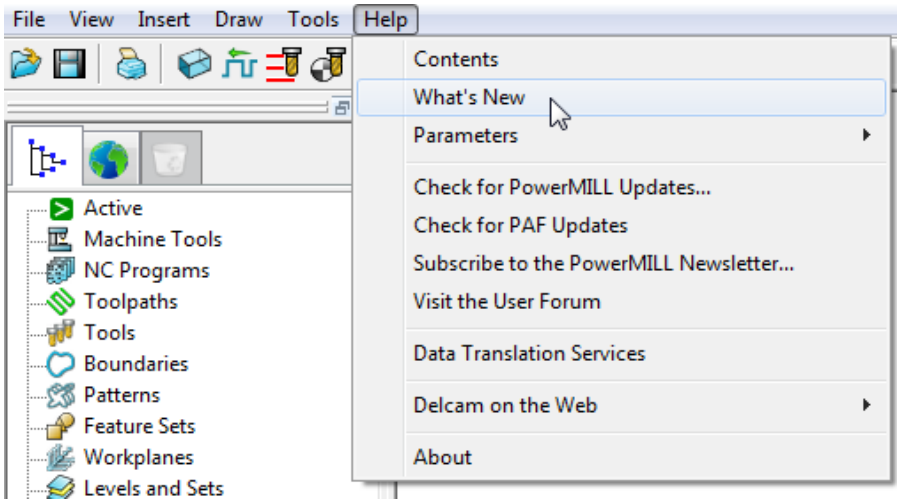

- **Context Sensitive Help**: Press the **F1** key to display the help page for the currently active dialog. Click the button in the top right hand corner of the dialog, followed by a left click in any of the input fields to focus on the help topic for that part of the dialog.
- **PowerMILL User Forum**: On the **Main** toolbar, select **Help** > **Visit the User Forum**, to participate in web-based user discussions on **PowerMILL** issues.
- The link to access the forum from any other internet connection is: http://forum.delcam.com/
- **Telephone and Email Support**: UK customers with up-to-date software maintenance can call 01216831010 or mail support@delcam.com to get help or advice on specific application problems.

Simplified PowerMILL Example

This example provides a quick overview of the machining process. It shows how to create and output a couple of simple toolpaths on a model of a valve chamber using default settings wherever possible.

The basic procedure is:

a Start up **PowerMILL**.

b Import a **Model**.

c Define the **Block** that defines the material size (or 3D machining limits).

d Define the cutting **Tools** to be used.

e Define set up options (**Rapid Move Heights – Start and End Point**).

f Create a **Roughing** Strategy.

g Create a **Finishing** Strategy.

h **Simulate** the toolpaths.

i Create an **NC Program** and output as a post-processed NC data file.

j **Save** the **PowerMILL Project** to an external directory.

Import a Model

2 From the **Main** menu select **File > Import Model** and browse for the model file:

.....\PowerMILL_Data\Models\PmillGettingStarted.dgk

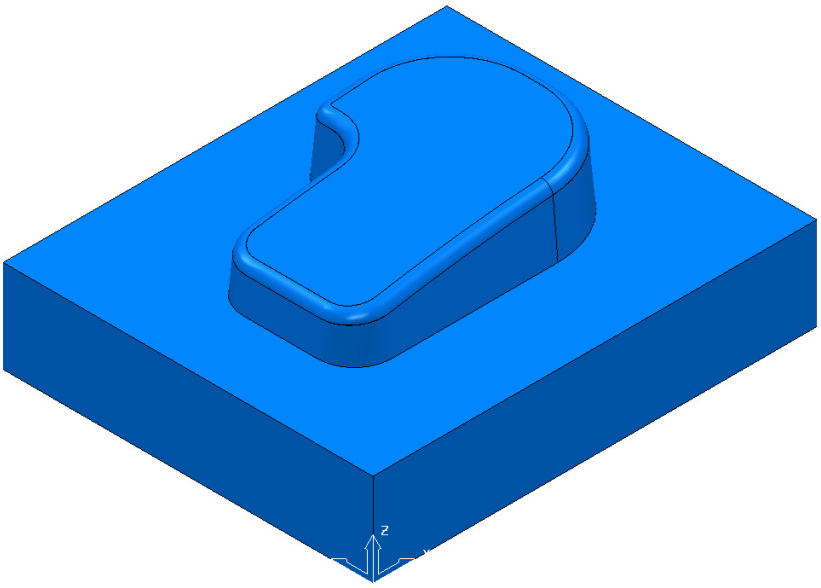

3 Select an **ISO 1** view.

 Copyright © Delcam Ltd

Blanking model entities

Use the **Blank Selected** (**Ctrl + J**) option available on the **Model** context menu to temporarily hide the selected model components.

In the illustrations below, the ***light blue*** surfaces are selected.

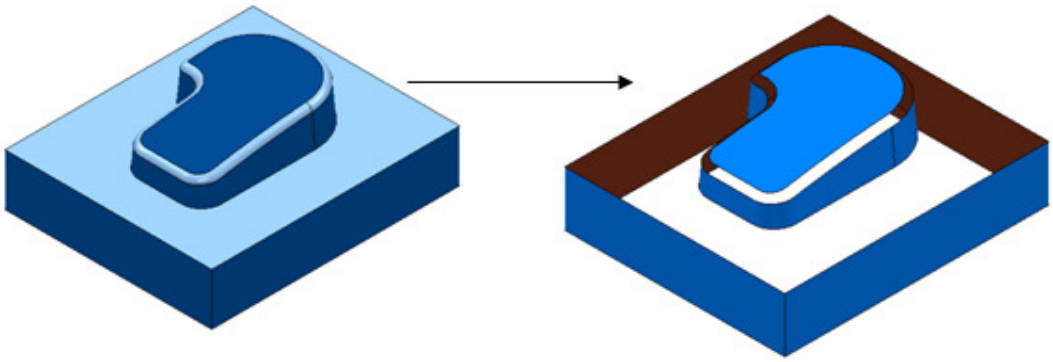

Use the **Blank Except** (**Ctrl K**) option available on the **Model** context menu to temporarily hide all model components except the selected ones.

The 2 selected items are light blue.

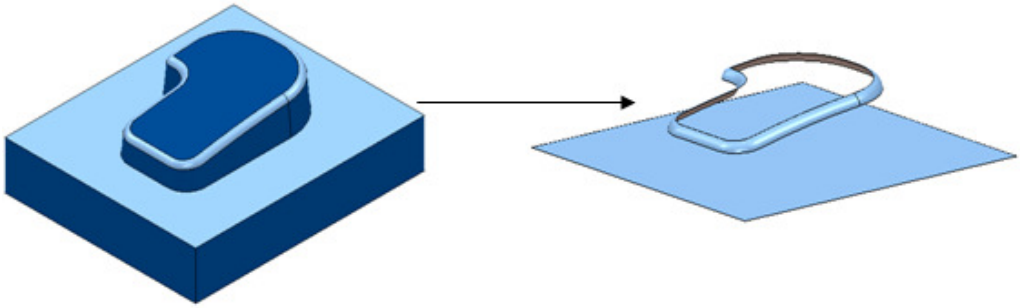

To re-display all model components, right-click in the graphics area and select **Unblank (Ctrl L)**. The blanked model components are displayed and selected (back to the left hand image above).

You can also toggle between the blanked and unblanked status of model components. Select the **Blank Toggle** (**Ctrl Y**) option to switch between the ***Blanked*** and ***Unblanked*** components of the model.

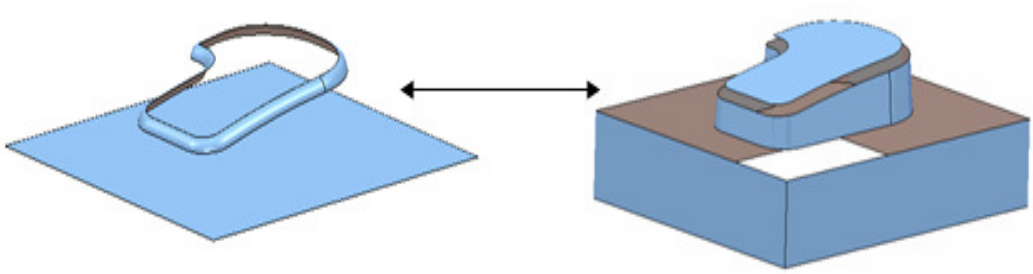

Defining a Block

The **Block** dialog is used to define the 3D working limits. This could be the actual raw material size or a user-defined volume, localised to a particular part of the component.

The settings on the **Block** dialog are set by default to **Defined by – Box**. Individual values in the dialog can be edited or locked (greyed out) as required. Enter a value in the **Expansion** field to include an offset in the block calculation.

Click the **Calculate** button to define a block around the model dimensions.

1 Click the **Block** button on the **Main** toolbar to display the **Block** dialog.

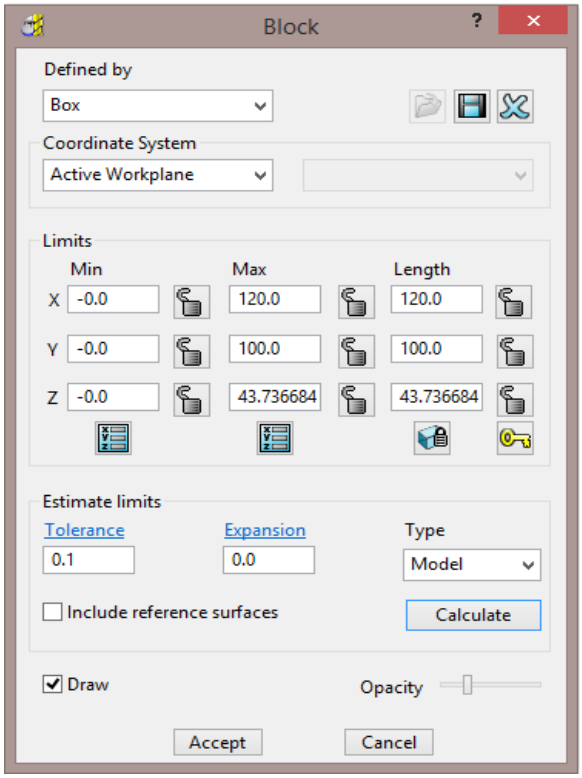

2 Click the **Calculate** button.

3 Click **Accept**.

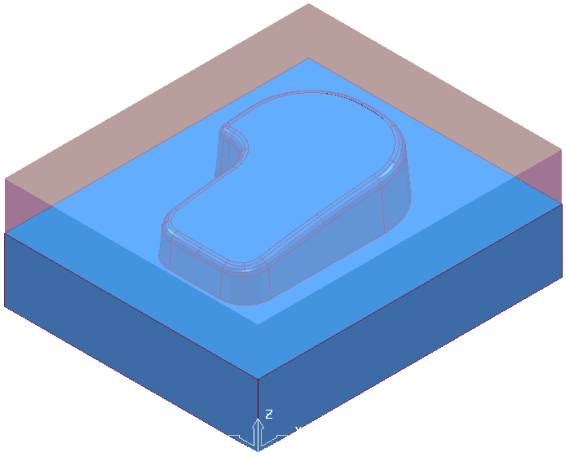

 Copyright © Delcam Ltd

Defining a Cutting Tool

The **Tool** dialogs are accessed using the various tool buttons on the **Tool** toolbar. This is located to the bottom left corner of the graphics area.

For this example, 2 tools will be created, A **Tip Radiused** tool for roughing out and a **Ball Nosed** tool for finishing.

1 Click the down arrow to display all the **Tool** options .

2 Place the cursor over a tool to view the description of the tool type (Tool tips).

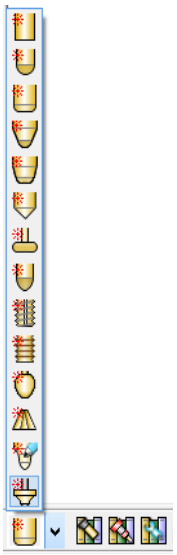

3 Select the Create a **Tip Radiused** tool button .

The **Tip Radiused Tool** dialog is displayed.

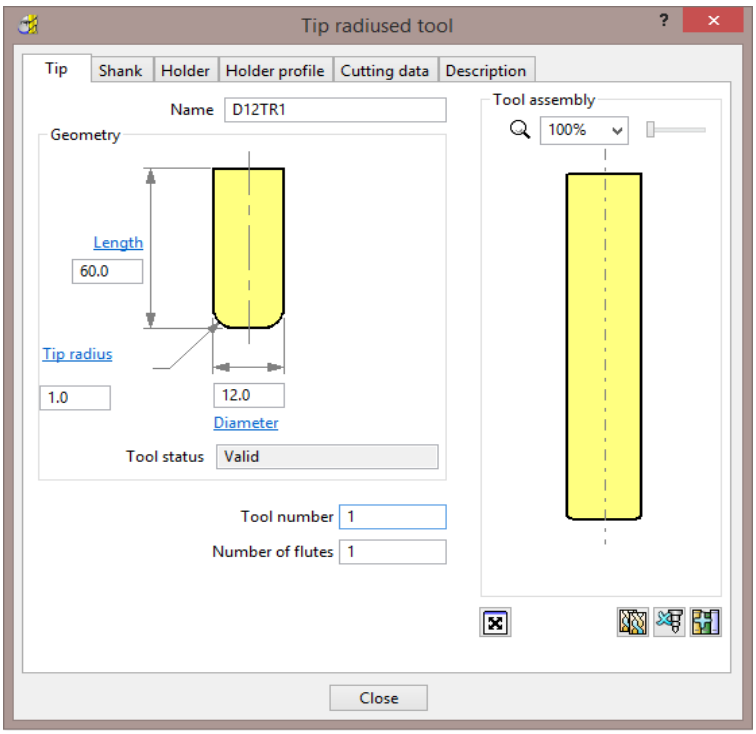

4 In the **Tip Radiused Tool** dialog, enter:

a **Name** – **D12TR1** It is recommended that the tool is renamed with a more relevant identification.

b **Diameter** – **12** When you enter a value for the **Diameter**, the tool Length automatically defaults to five times this value. You can edit this value if needed.

c **Tip Radius** – **1**

d **Tool Number** – **1**, A **Tool Number** can be output to the **NC Program**. If the machine has a tool changer, this number will represent the location in the carousel.

e Click **Close** on the **Tip Radiused Tool** dialog.

5 Define another tool, this time, select the **Create a Ball Nosed tool** button and in the **Ball Nosed Tool** dialog, enter:

a **Name** – **BN12**

b **Diameter** – **12**

c **Tool Number** – **2**

d Click **Close** on the **Ball Nosed Tool** dialog.

6 In the **PowerMILL *explorer*** panel on the left of the screen, open **Tools** and right mouse click **D12TR1** tool to raise the local menu and select **Activate**.

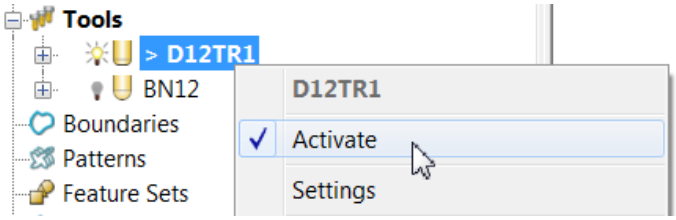

*Only one tool can be active at any one time and the word **Activate** in the tool context menu is prefixed with a tick* ✔ Activate *. The active tool is automatically included in a strategy dialog when the strategy is created.*

*In the **PowerMILL explorer**, the **Active** tool is displayed in **bold text** and prefixed with '**>**'.*

Rapid Move Heights

The **Rapid move heights** options provide safe control rapid tool movements across the component.

- **Safe Z** is the height above the job at which the tool can move at a rapid feedrate, clear of any obstructions such as the work piece or clamps.
- **Start Z** is the height to which the tool will descend, at rapid feed rate prior to applying the plunge feed rate.

PowerMILL displays rapid moves as dotted red lines, plunge moves as pale blue, and cutting moves as green.

 Copyright © Delcam Ltd

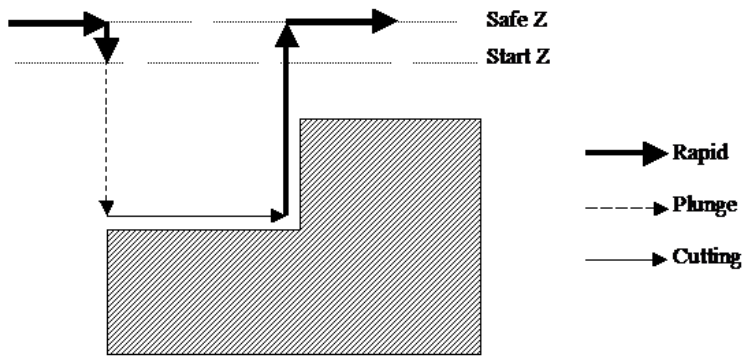

Setting up Rapid Move Heights

1 On the **Main** toolbar, click the **Rapid Move Heights** button to open the **Rapid Move Heights** dialog.

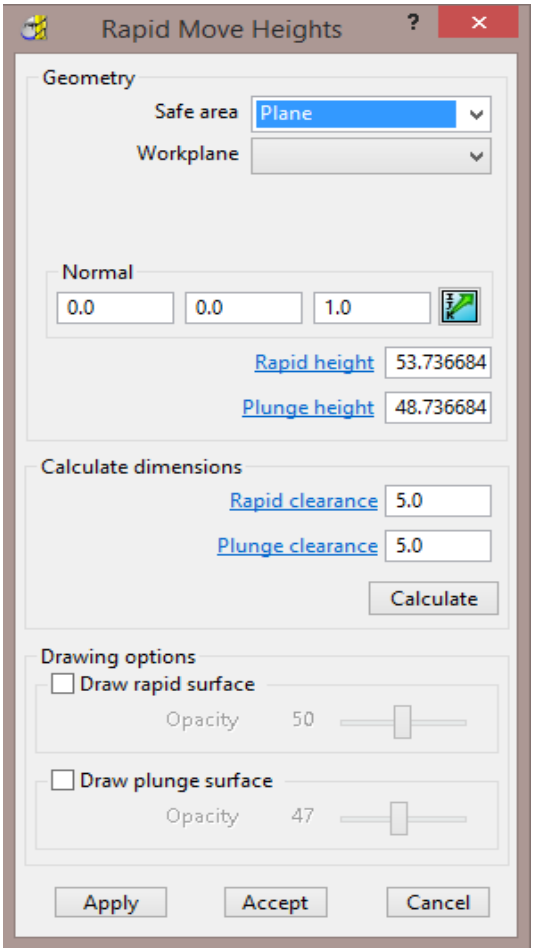

2 Click **Calculate**.

3 Click **Accept**.

This sets the absolute **Safe Z** and **Start Z** values to be above the **Model** or **Block** by the incremental distances, displayed in the **Calculate dimensions** area of the dialog.

Tool Start and End Point

The **Start and End Point** dialog allows you to define a position where the tool travels to before and after a machining strategy.

Click the tool **Start and End Point** button on the **Main** toolbar to display the **Start and End Point** dialog.

By default, the tool **Start Point** is set to **Block Centre Safe** and the **End Point** is set to **Last Point Safe**.

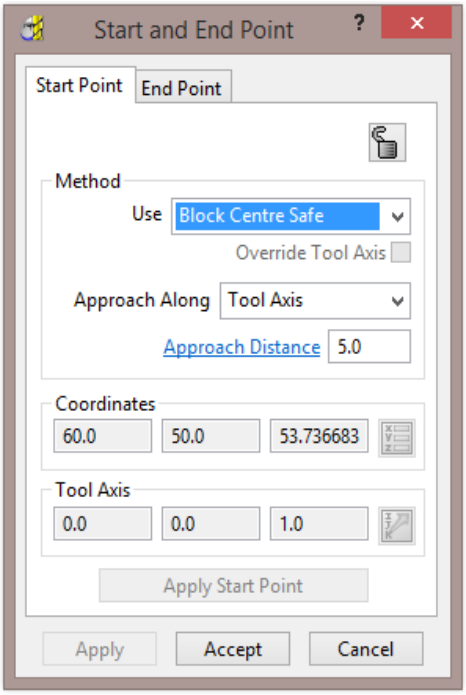

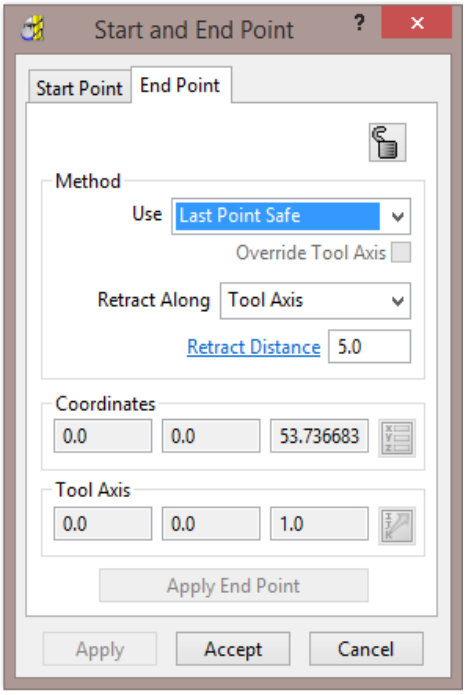

Other **Start and End Point** settings are configured by selecting the different options in the **Method** area on the dialog.

These include **Block Centre Safe**, **First/Last Point Safe**, **First/Last Point**, and **Absolute**.

For now, click **Accept** to use with the default settings.

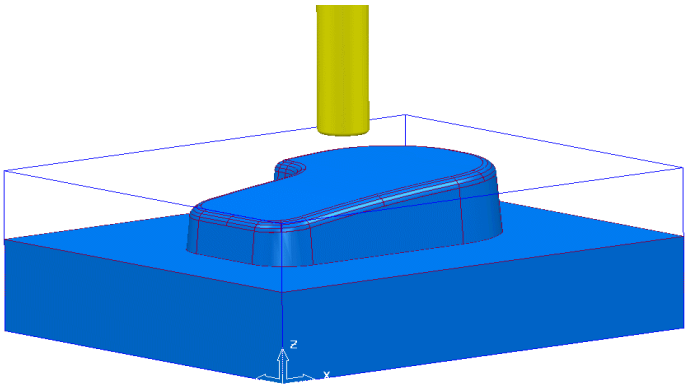

The **D12TR1** tool is placed at the **Block Centre Safe** position ready for you to create the first toolpath.

 Copyright © Delcam Ltd

Creating a Roughing Strategy

1 From the **Main** toolbar select the **Toolpath Strategies** button.

2 From the left hand list select **3D Area Clearance**

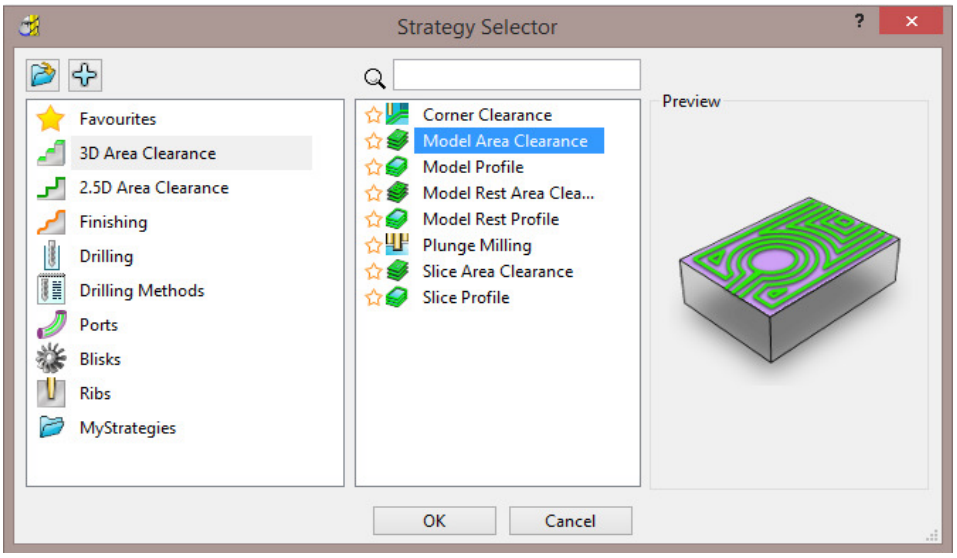

3 From the right hand list select the **Model Area Clearance** strategy. This displays the **Model Area Clearance** strategy dialog.

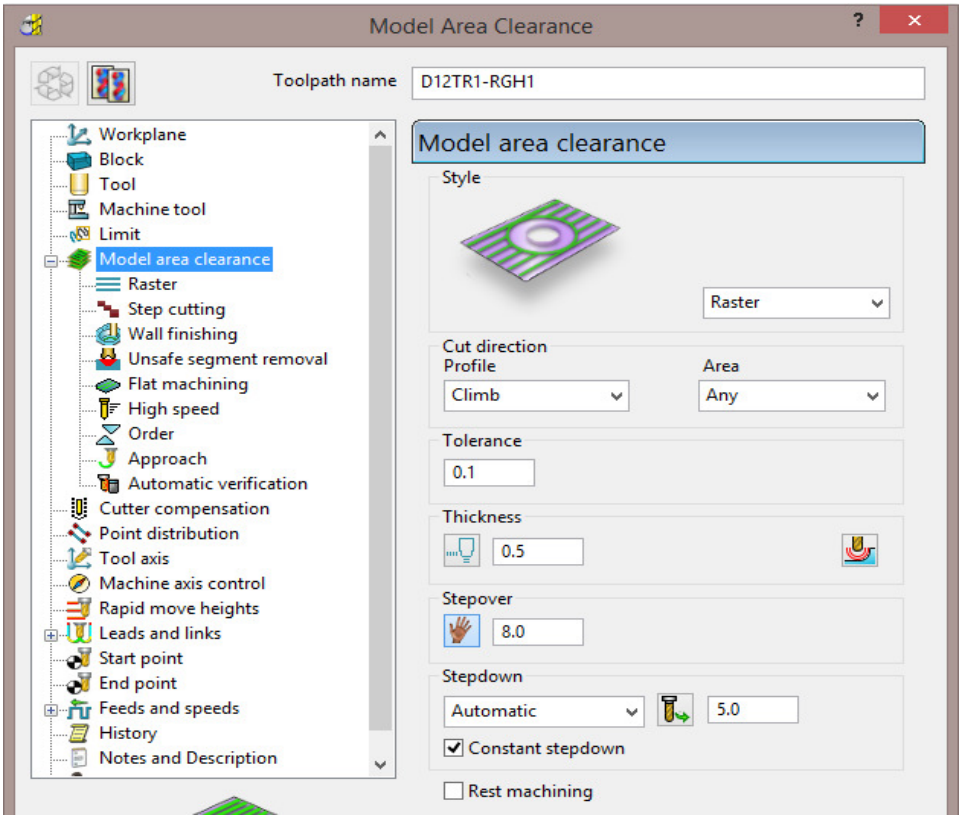

4 In the **Model Area Clearance** strategy dialog:

a In the **Toolpath** name field, enter **D12TR1-RGH1**.

b Select ***Style*** – **Raster** with ***Profile*** **- Climb** and ***Area*** **- Any**.

c Edit the **Thickness** value to be **0.5** (This is the amount of material that will be left on the job).

d Edit the **Stepover** value to be **8** (This is the distance between each raster pass (the width of cut)).

e The **Stepdown** value (depth of cut) is left at the default value of **5**.

f Click **Calculate** to process the machining strategy.

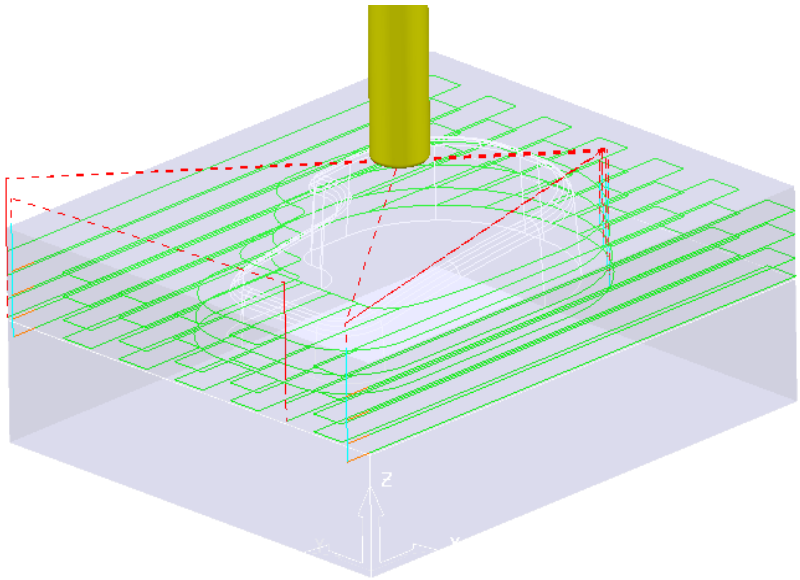

Simulating the toolpath

5 From the **PowerMILL** ***explorer*** right mouse click on the **Toolpath D12TR1-RGH1** and from the local menu select, **Simulate from Start**.

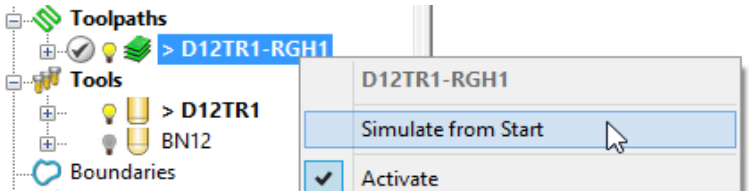

The ***Simulation*** *toolbar will appear just* above the graphics area.

6 From the **Simulation** toolbar click the **Play** button to run the **Simulation**.

The buttons beyond ***Play*** *enable other actions such as* ***Pause****,* ***Step****,* ***Search****,* and ***Go to***.

 Copyright © Delcam Ltd

Creating a Finishing Strategy

7 In the **PowerMILL *explorer***, right click the **BN12** tool and select **Activate** (or double left click on the tool's, **PowerMILL *explorer***, icon).

8 From the **Main** toolbar select the **Toolpath Strategies** button.

9 From the left hand list select **Finishing**.

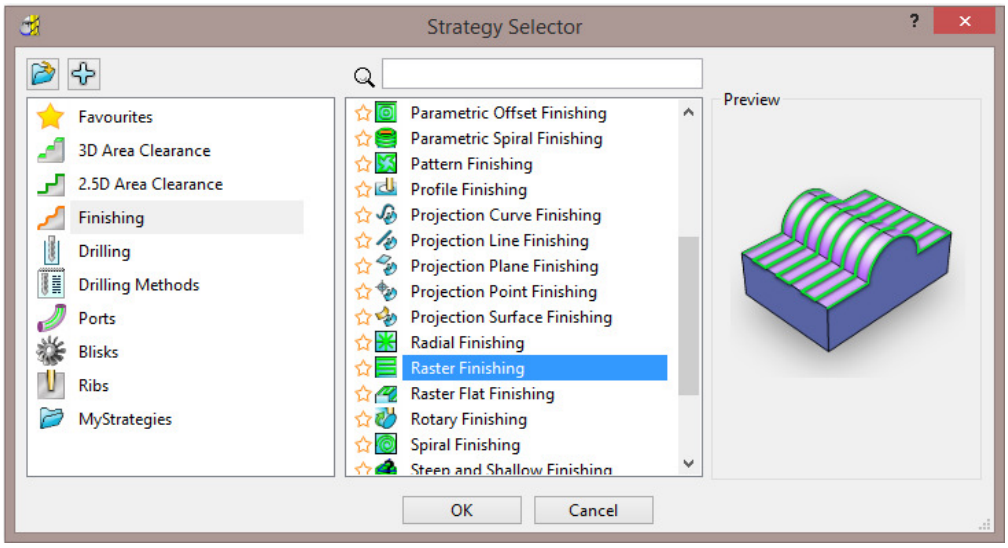

10 From the right hand list select the **Raster Finishing** strategy and click **OK**.

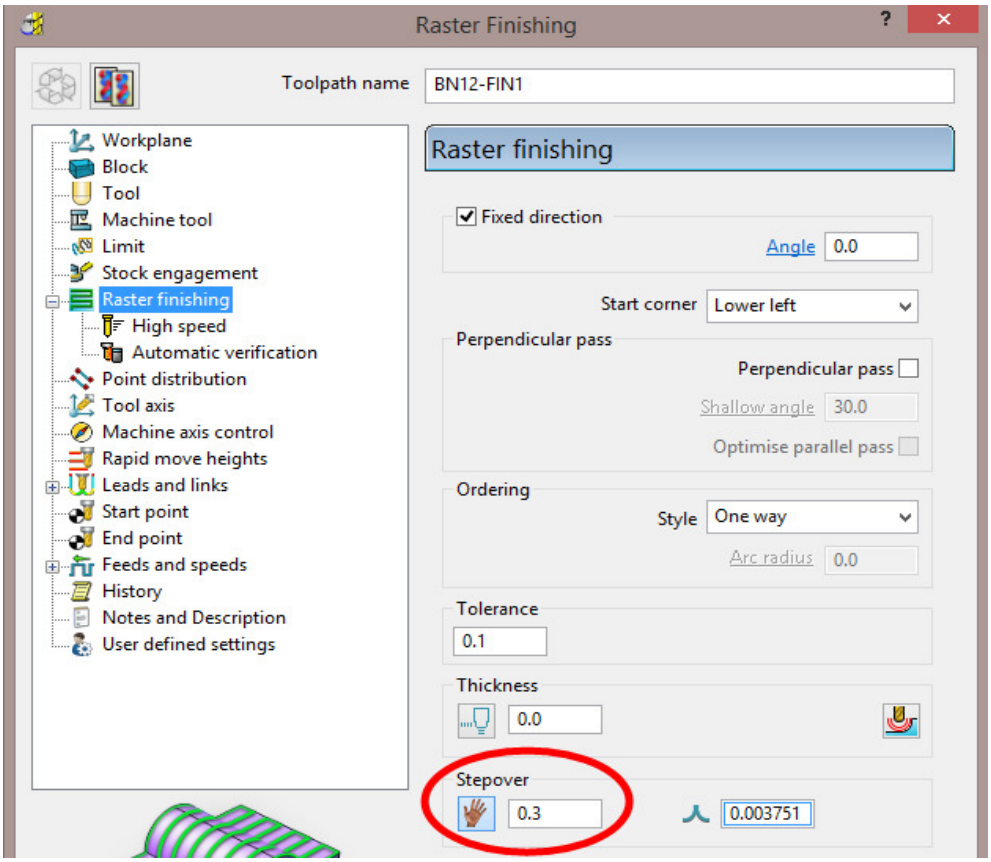

11 In the **Raster Finishing** strategy dialog:

a For the **Toolpath Name**, enter **BN12-FIN1**.

b Edit the **Stepover** value to **0.3**

c Click **Calculate** to process the machining strategy.

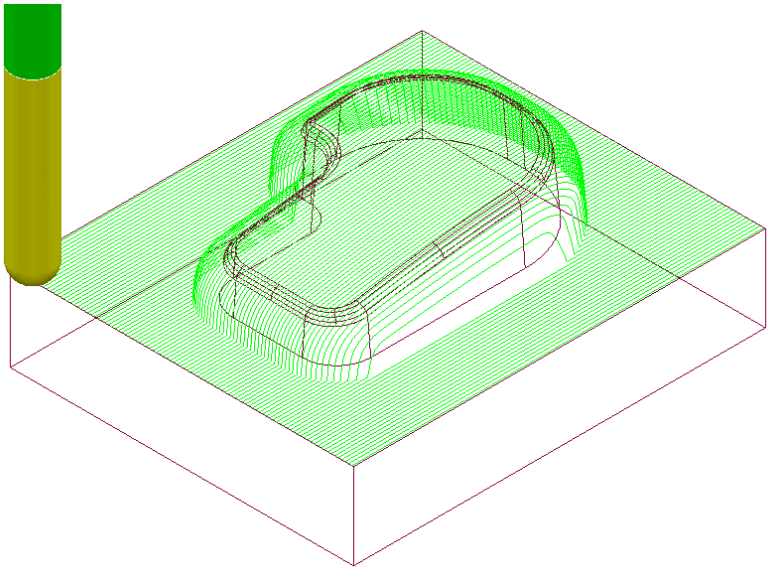

The **Raster Finishing** pattern is projected down Z onto the component, taking into account tool geometry and machining settings.

The toolpath link moves, clear of the job, are not displayed in this illustration for clarity.

Toolpath Simulation and ViewMILL

PowerMILL provides two levels of options for simulating toolpaths:

- The first level **Simulates** the cutting tool movement along the toolpath.
- The second level (**ViewMILL**) includes a shaded image of the stock material being progressively reduced as the tool moves along the toolpath.

Toolpath Simulation

12 In the **PowerMILL *explorer***, right-click on the toolpath **D12TR1-ModelAreaClear** and from the local menu select **Activate**.

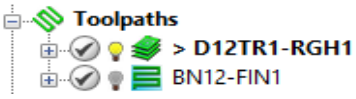

The **Active** toolpath is displayed in bold text and prefixed with a > symbol.

13 In the **PowerMILL *explorer***, right-click on the roughing toolpath **D12TR1-ModelAreaClear** and select **Simulate from Start**.

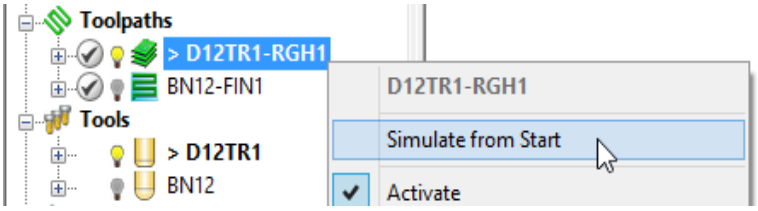

 Copyright © Delcam Ltd

14 The **Toolpath Simulation** toolbar is displayed at the top of the screen. This displays the name of the toolpath and tool, together with buttons to control the simulation.

Using the simulation control buttons, you can:

- **Play -** start the simulation and play it in continuous mode.
- **Pause -** pause the simulation.
- **Step Back -** step the simulation back by tool moves. Click the **Play** button to resume continuous mode.
- **Step Forward –** step the simulation by tool moves. The faster the speed (defined using **Speed Control**) the bigger the step. Click the **Step Forward** button again to see the next move or click the **Play** button to resume continuous mode.
- **Search Backward -** step the simulation back to the previous toolpath segment.
- **Search Forward -** step the simulation to the next toolpath segment. Click the **Search Forward** button again to see the next component or click the **Play** button to resume continuous mode.
- **Go to Beginning -** moves to the start of the toolpath.
- **Go to End -** moves to the end of the toolpath.
- **Speed Control -** controls the speed of the simulation. The fastest setting is by having the slider at the right, the slowest at the left.
- Select **Point to Point** (toolpath points per second) or **Feedrate** (a multiple of the stored federate) as the basis for the **simulation** feedrate.

15 Click the **Play** button and **Simulate** the **toolpath**.

16 **Activate** the finishing toolpath **BN12-FIN1** and repeat the simulation process.

ViewMILL

1 **Activate** the roughing toolpath **D12TR1-RGH1** and select it in the **Simulation** Toolbar.

2 From the **Main** pull down menus, select **View > Toolbars > ViewMILL** to raise the **ViewMILL** Toolbar.

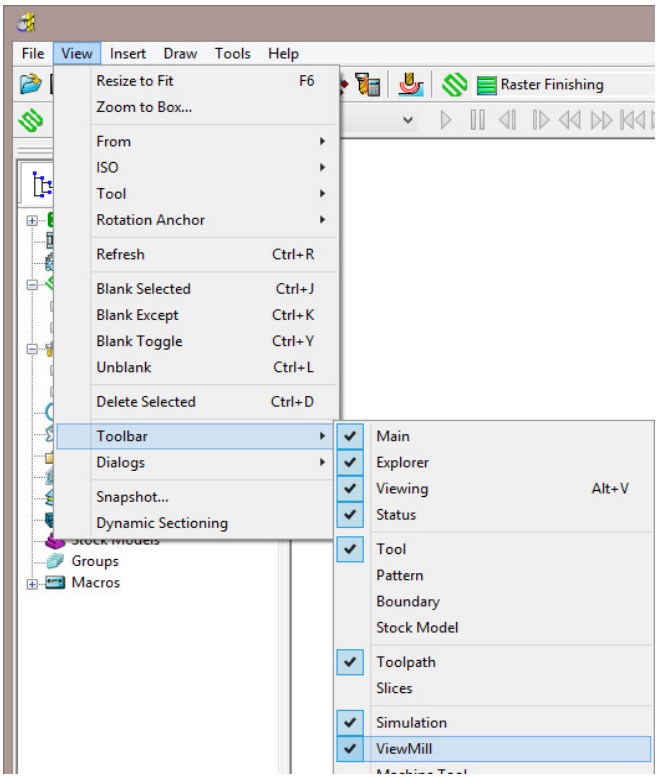

The **ViewMILL** toolbar is displayed. Initially, all the buttons are greyed out.

3 Click the button to toggle the graphics window into the **ViewMILL** mode (The **ViewMILL** toolbar buttons are now active).

4 Click the button to select a **Plain Shaded Image**.

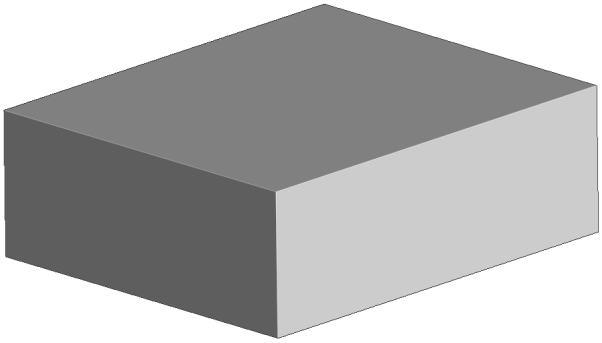

 Copyright © Delcam Ltd

5 Click the **Tool** button to display the tool.

6 Click the **Play** button to start the **ViewMILL** simulation.

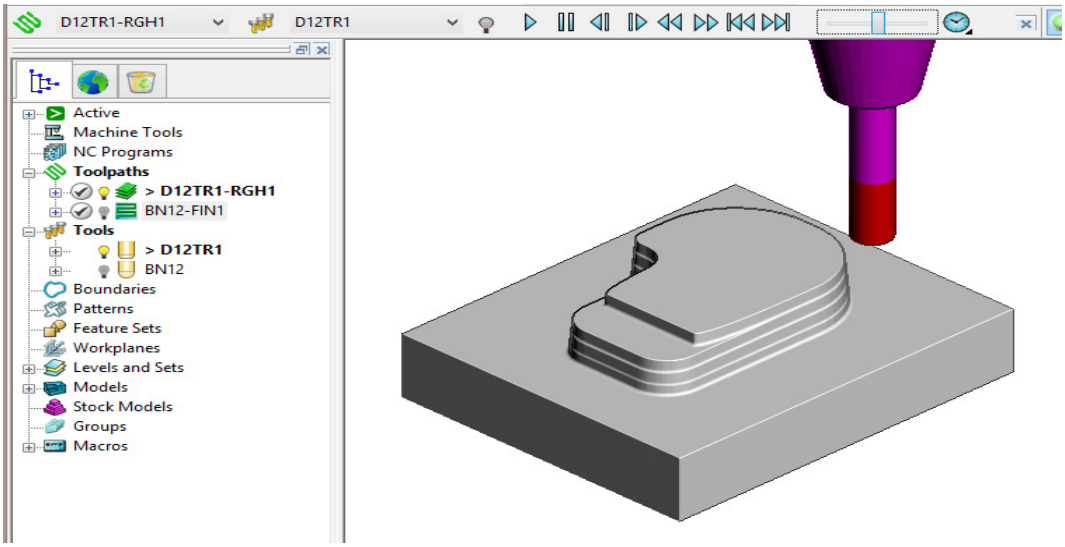

7 After the ***simulation*** has finished, select the toolpath **BN12-FIN1** on the **Simulation** toolbar, followed by the **tool** button .

8 Click the **Play** button again to view the continued simulation of material removal by the finishing toolpath.

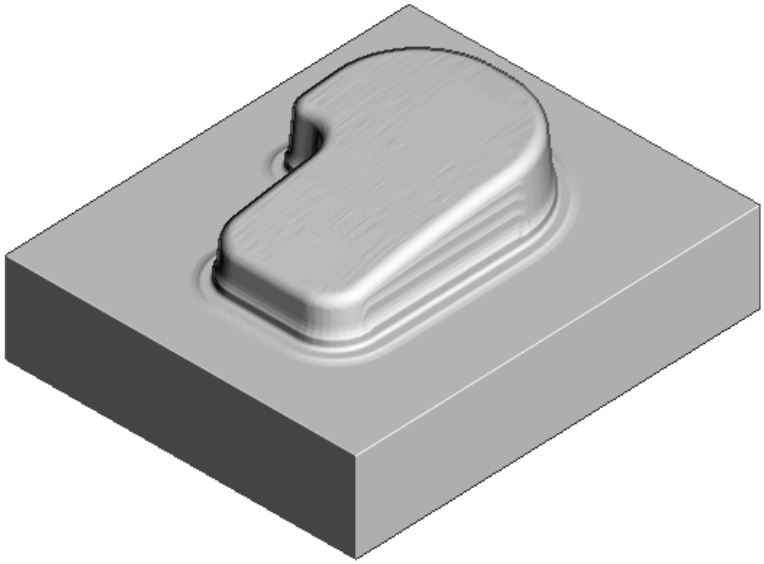

9 In the **Simulation** toolbar, select the **Close** button to delete the **ViewMILL** session.

NC Programs (Post-Processing and NC data Output)

1 From the **Main** menu, select **Tools > Customise Paths** to open the **PowerMILL Paths** dialog.

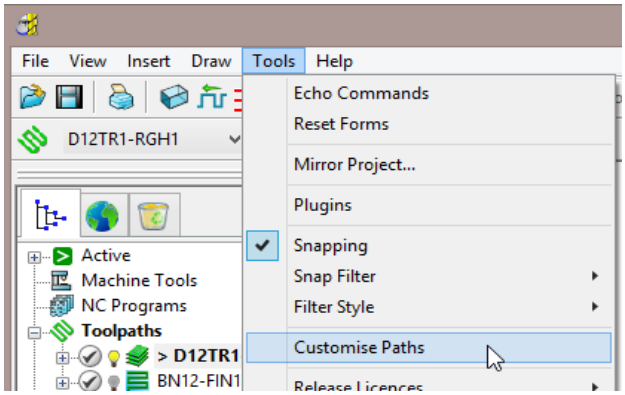

This displays the **PowerMILL Paths** dialog.

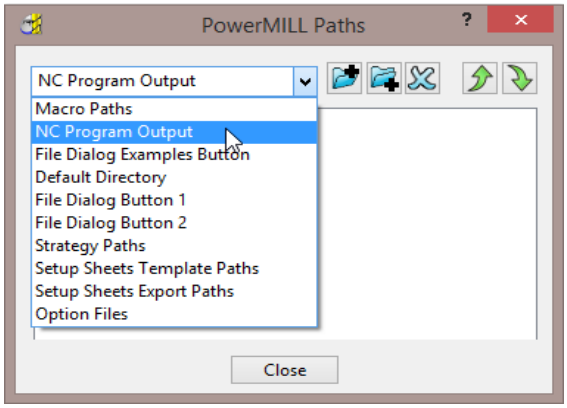

2 In the **PowerMILL Paths** dialog, select the option **NC Programs Output**.

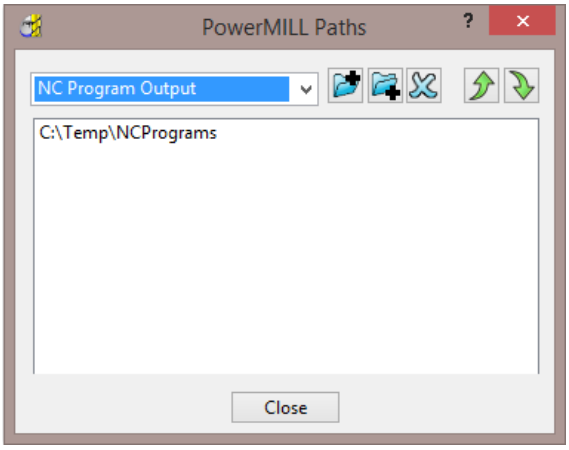

This controls where the post-processed, NC data files are output ready to download to a machine tool controller.

3 Click the ***Add path*** to top of list button.

4 In the **Select Path** dialog which appears, browse to the required location **C:\Temp\NCPrograms** and click **OK**.

5 In the **PowerMILL *explorer***, right-click **NC Programs** and select **Preferences** to display the **NC Preferences** dialog.

 Copyright © Delcam Ltd

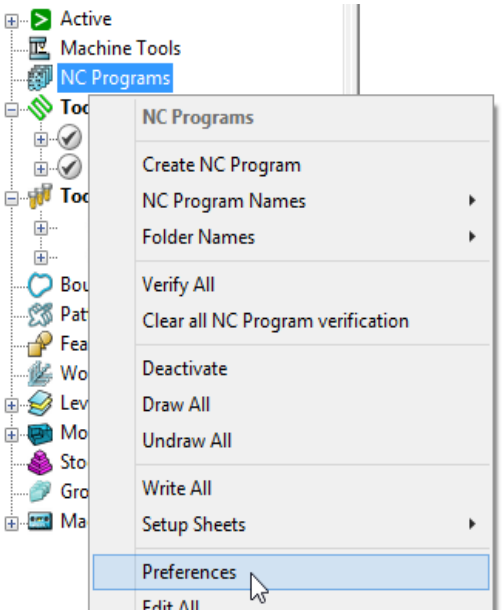

NC Preferences enables you to control the content of output files to download to a machine tool.

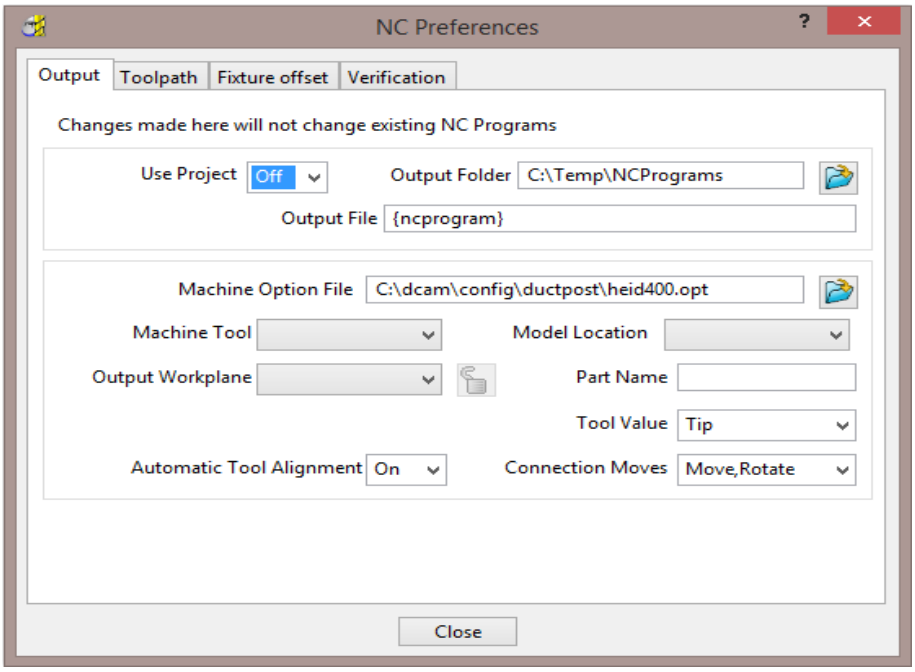

The **Output Folder** defaults to the location already defined in **Tools > Customise Paths**.

6 In the **NC Preferences** dialog, click **Machine Option File** button. This displays the **Select Machine Option Filename** dialog.

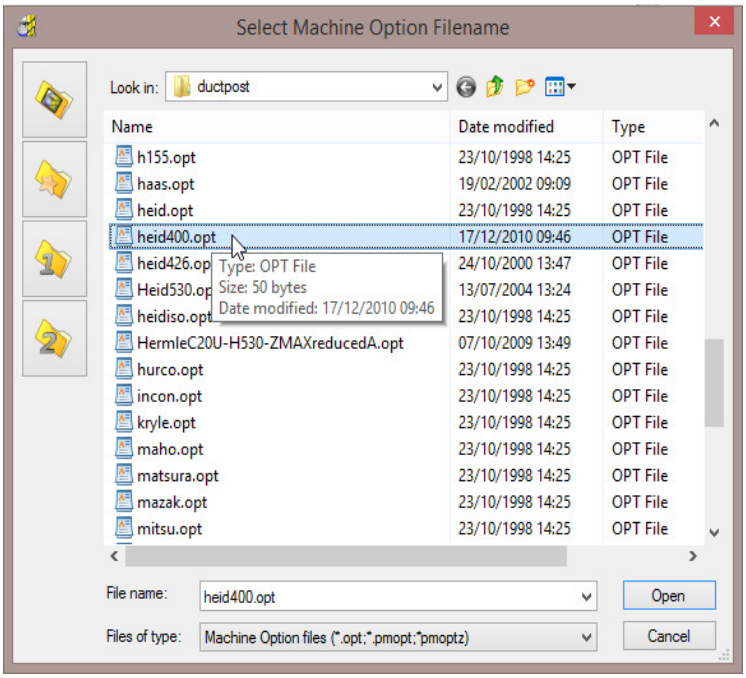

7 Select **heid400.opt** and click **Open**. This selects the **heid400.opt** file and returns you back to the **NC Preferences** dialog.

8 **Close** the **NC Preferences** dialog.

9 In the **PowerMILL *explorer***, right-click **NC Programs** and select **Create NC Program**.

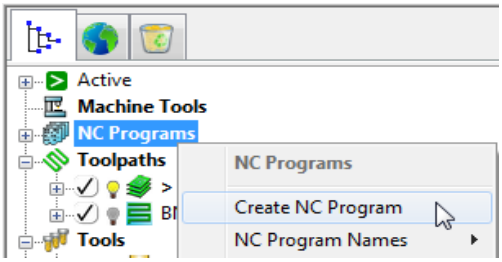

An empty **NC Program** appears in the **PowerMILL *explorer*** and the **NC Program** dialog is displayed.

10 Within the **PowerMILL *explorer***, use the left mouse to select and drag the toolpath **D12TR1- ModelAreaClear** onto the **NC Program 1**.

*Alternatively, right-click on the toolpath **D12TR1-RGH1** and select **Add to > NC Program**.*

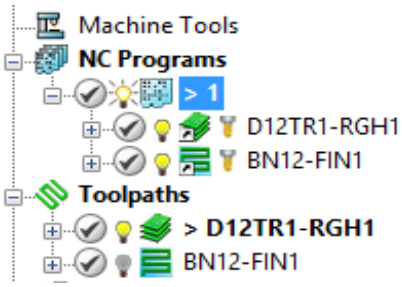

A copy of the ***toolpath name*** will appear in the **NC Program** indicating that it has been assigned as part of the output file.

 Copyright © Delcam Ltd

11 In the **PowerMILL *explorer***, click and drag the toolpath **BN12-RasterFinish** onto **NC Program** 1.

Click the small + box to expand and view the contents of the **NC Program**.

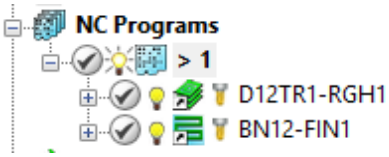

The toolpath names are listed in the **NC Program** ready to be post-processed.

12 In the **NC Program** dialog displayed in the graphics area, click the **Write** button to start the post processing operation. An Information dialog is displayed with a progress and confirmation summary.

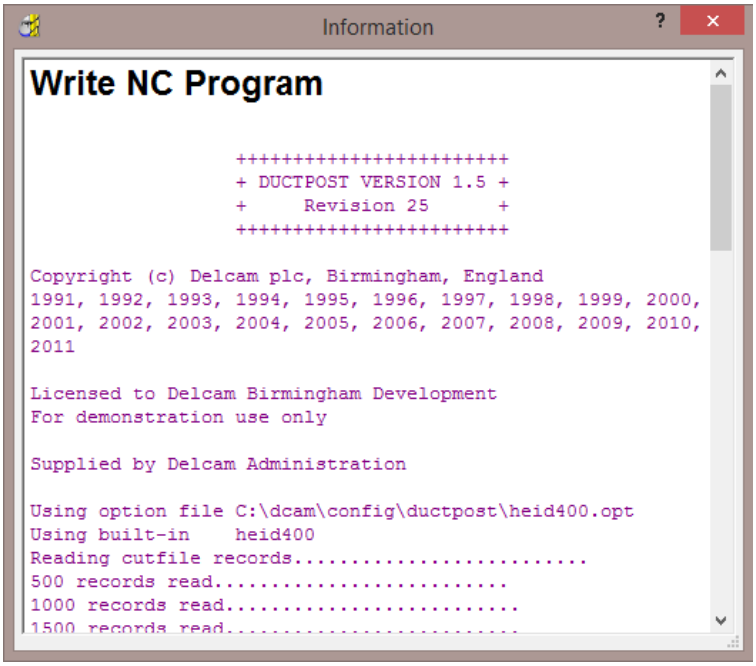

13 **Close** both the **NC Program** and **Information** dialogs.

14 You can find the created NC data file **1.tap** under **C:\temp\NCPrograms** on your computer.

Saving the Project

15 On the **Main** toolbar, click the **Save** button.

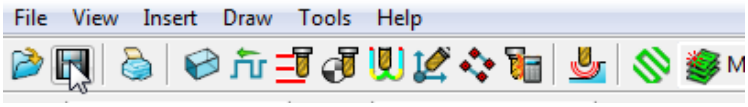

*As this is the first time that this **Project** is saved, the **Save Project As** dialog will open.*

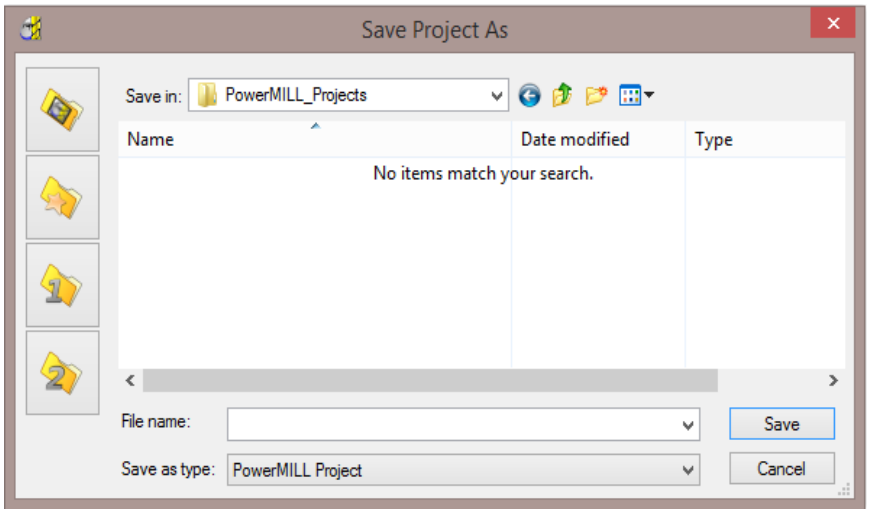

If the **Project** has been **Saved** before, then it will simply be updated.

16 From the **Main** menu , select **File** > **Save Project As**:-

.....\COURSEWORK\PowerMILL-Projects\PmillGettingStarted

17 From the ***pulldown*** menus, select **File** > **Delete All**, followed by **Tools** > **Reset Forms**.

The content of **PowerMILL *explorer*** is deleted and all dialogs are reset to their default settings.

The externally stored copy of the **Project** (***PmillGettingStarted***) can be reopened as required.

Additional Exercise

1 **Import** the **Model**:-

.....\PowerMILL_Data\Models\facia.dgk

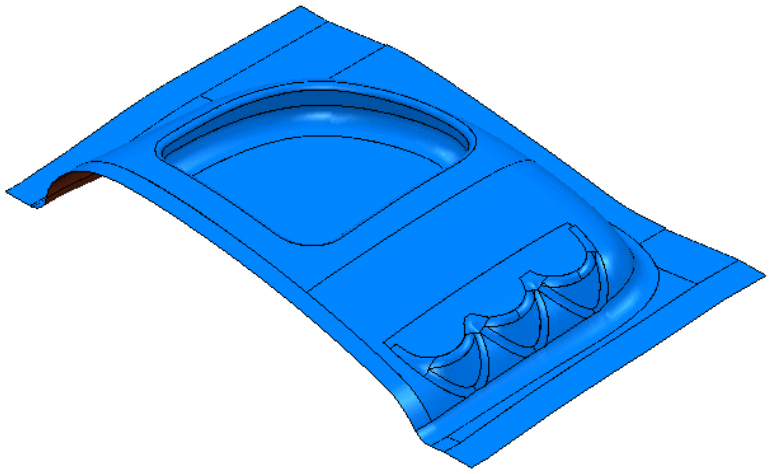

2 **Save the Project as**:

.....\COURSEWORK\PowerMILL_Projects\Facia-1

3 Use the same **Tools** and **machining strategies** to those in the previous **Project** (PmillGettingStarted).

4 Once this exercise is completed (and saved as a **Project)** locate the ***pulldown*** menus, and select **File** > **Delete All** followed by **Tools** > **Reset Forms**.

 Copyright © Delcam Ltd

2. Machining Setup

In the previous section, the toolpaths were created using the default values wherever possible.

We will now look at the machining Setup options in more detail.

In particular:

- Setting up direct access to regularly used files using **Customise Paths**.
- Setting **Feed rates**.
- **Workplanes** (Positional datums) to create appropriate machining set ups.
- **Tool** with ***Shank*** and ***Holder*** definition.

PowerMILL Panes

The **PowerMILL** panes are located above the **PowerMILL *explorer*** area.

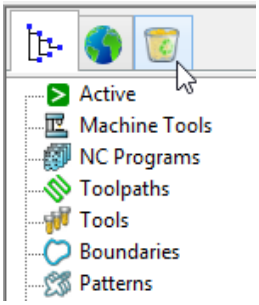

- The first pane displays the **PowerMILL explorer** (as shown above).
- The second pane displays the **HTML** browser used for viewing **Help** files.
- The third pane opens the **PowerMILL *Recycle Bin***. Entities deleted from the ***PowerMILL explorer*** can be recovered from the **Recycle Bin**.

Setting up direct access to regularly used folders

1 To Import a Model via the **Main** pull down menus, select **File** > **Import Model**.

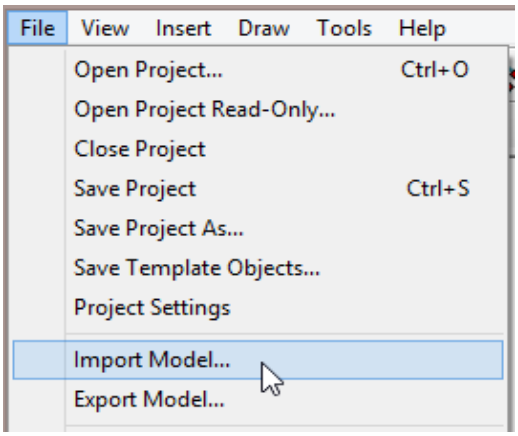

The **Import Model** dialog is displayed.

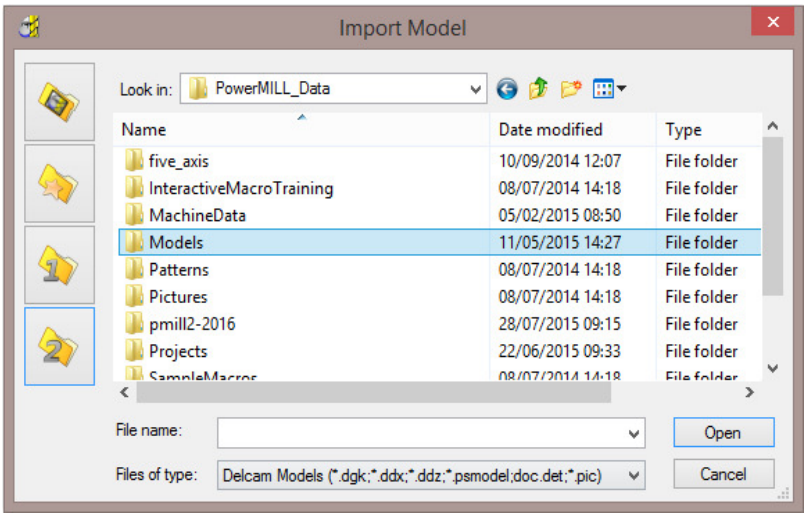

- - changes the directory to the current ***Project*** directory.
- - changes the directory to the ***Examples*** directory.

  This folder contains a selection of sample model files which are installed within the **PowerMILL** installation in a directory called ***Examples***.
- - changes the directory to the first ***user-defined*** directory.
- - changes the directory to the second ***user-defined*** directory.

To customise the paths for ***user-defined*** directory folders:

 Copyright © Delcam Ltd

2 From the **Main** menu select **Tools** > **Customise Paths**. The **PowerMILL Paths** dialog is displayed.

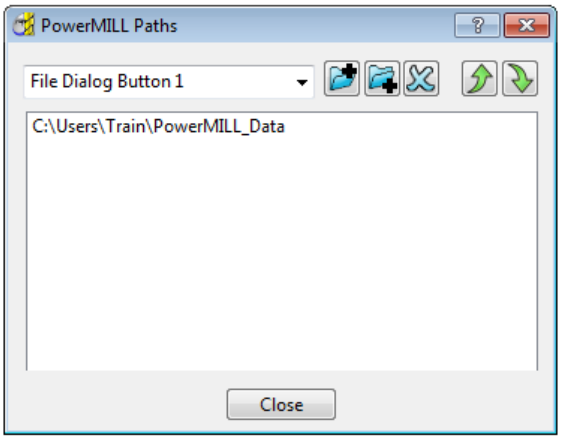

3 Select the **File Dialog Button 1** option from the drop-down list.

4 Click the **Add path to top of list** button and browse to:

.....\PowerMILL_Data\Models

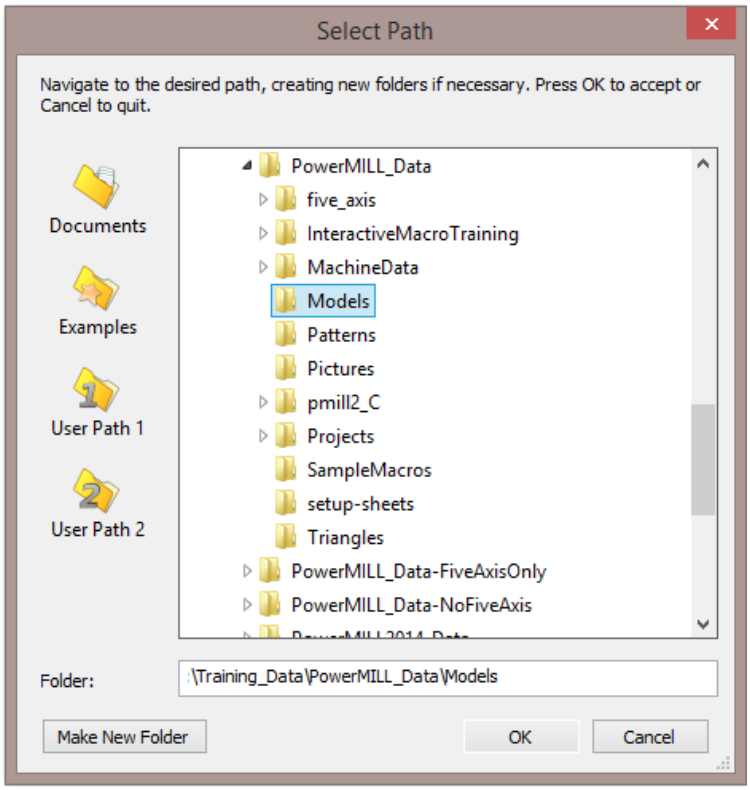

5 Click **OK**.

6 Repeat steps 2 and 3, but this time select the **File Dialog Button 2** option to link directly to:

....\PowerMILL_Data

*Outside the training environment, the location of the **PowerMILL_Data** directory will depend on where you have installed it!*

Loading a model into PowerMILL

1 From the **Main** menu, select **File** > **Import Model**.

2 Use **Shortcut Button 1** or browse to:

....\PowerMILL_Data\Models

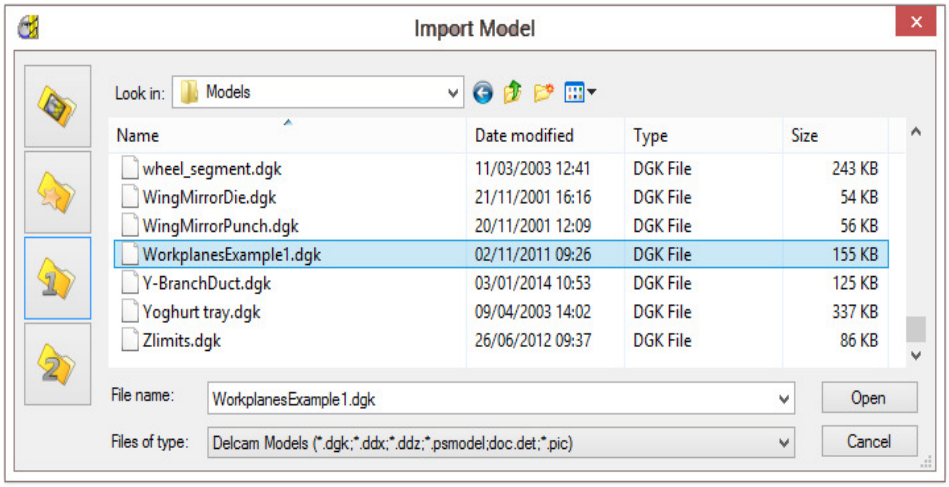

*A variety of **Model** formats can be imported into **PowerMILL**. Use the **Files of type** filter to widen or narrow your choice.*

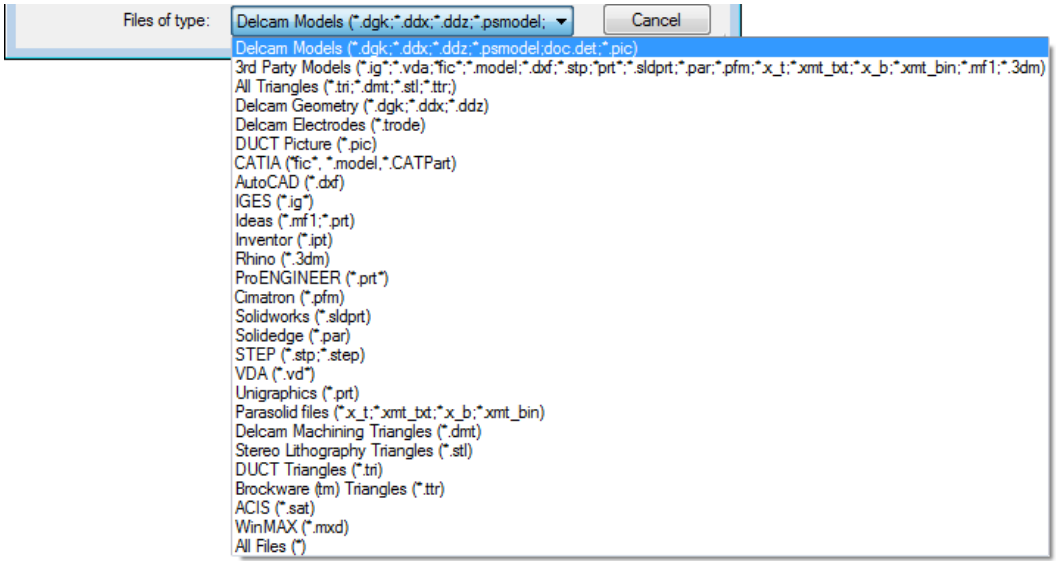

Please note: direct transfer - file formats (eg: CATIA, ProENGINEER, etc) are only available as a cost option.

3 Back in the main form, select the file **WorkplanesExample1.dgk** and then click **Open**.

4 From the **Viewing** toolbar (Right of graphics area) select **Resize to fit** .

The **model** is re-scaled to fit within the **PowerMILL** graphic area.

 Copyright © Delcam Ltd

Viewing the Model

Although the **model** is displayed, it is a good idea to look at it from all angles to fully understand its size and features.

Above is the **Views** toolbar (shown aligned horizontally).

By default, the **Viewing** toolbar is aligned to the right hand side of the graphics area. These options mainly include basic visual orientations along with several shading modes, many of which provide specialist analysis of the model.

5 From the **View** toolbar, select an isometric **ISO 1** view.

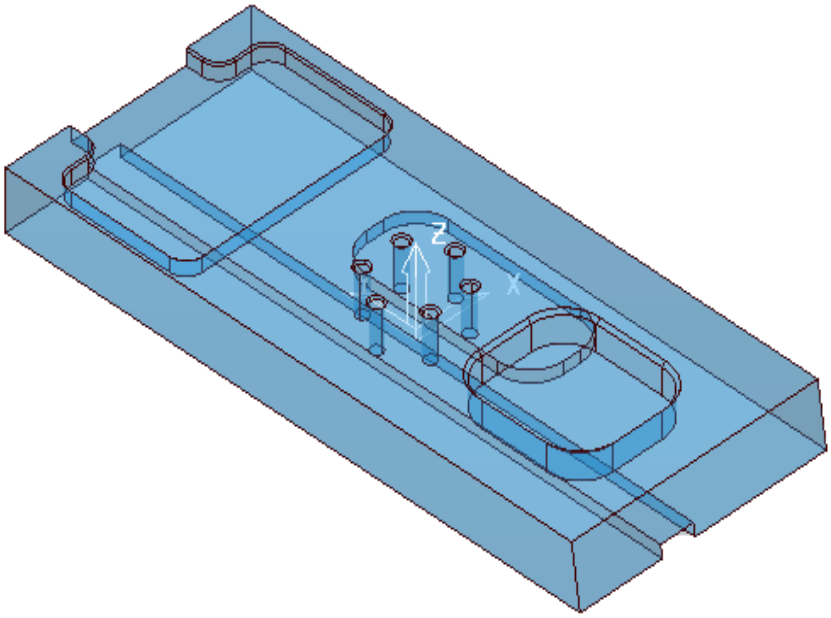

In most cases, the X dimension of a machine tool table will be greater than Y; in which case, the longer side of the component may exceed of the travel limits in Y.

If this is the case, it will be required to align the component with the longest side along X to ensure that it can be positioned within the travel limits.

Saving the Project

It is good practice to create a **Project** as soon as possible and then to **Save** it at regular intervals during the session.

6 On the **Main** menu, select **File** > **Save Project As**:

....\COURSEWORK\PowerMILL-Projects\WorkplaneExample1-EX1

Setting Feed rates

The current **Feed rate** values are applied directly to a newly created **toolpath**. The **Feed rate** values can be stored in a **Tool** definition to update the **Feed rate** dialog accordingly on **Tool** activation. At this stage we will look at manually setting the feed rate individually. Click the **Feeds and Speeds** button on the **main** toolbar to display the **Feeds and Speeds** dialog.

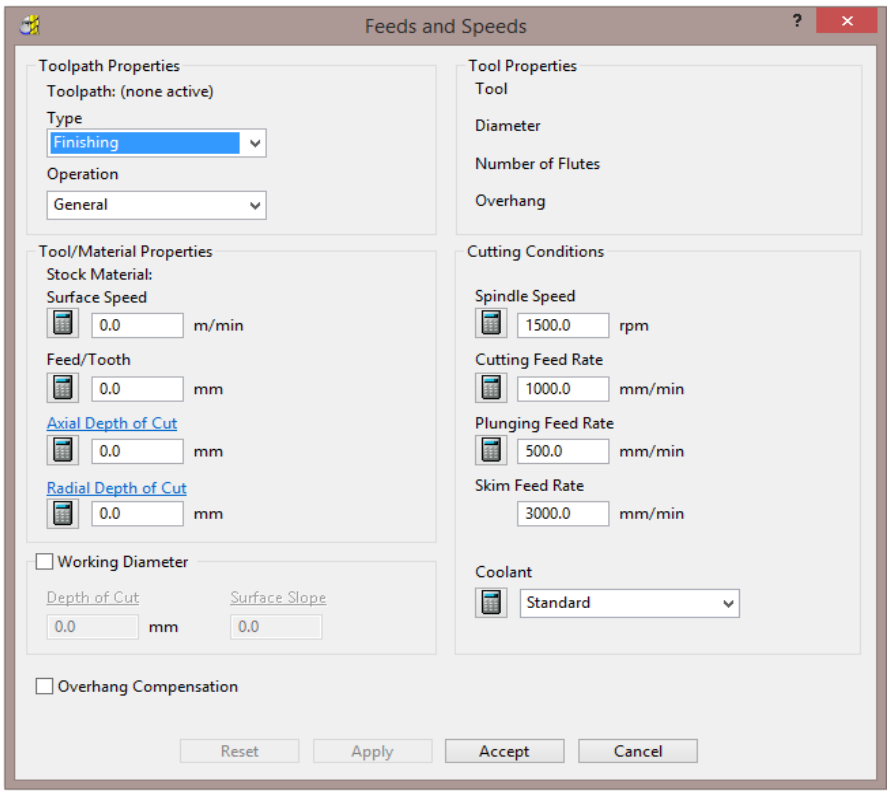

The default values (as shown above) can be modified as required and **Accept** selected for them to be the default for future toolpaths. **Apply** is used to update the **Feeds and Speeds** of an ***active* toolpath**. Note **Apply** is 'greyed out' if there is currently no ***active* toolpath**.

Creation and Application of Workplanes.

When a **model** is imported into **PowerMILL** it is more than likely that the original global datum (**Transform**) will not provide a suitable position/orientation for tool setting or applying machining strategies.

Workplanes provide the ideal method of creating suitable machining datums and alignments without having to physically move the component **model**.

Workplanes are additional datums that can be moved and/or orientated within the global environment. Only one **workplane** can be active at any one time. If no **workplane** is active, then the original global **Transform** is the datum.

By deactivating a **workplane**, the original coordinate set-up can easily be re-activated for tasks such as checking original dimensions or for importing a 'new issue' updated model.

 Copyright © Delcam Ltd

Workplane (1) - At Top of Selection

7 With the left mouse button depressed, drag a box over the entire **model** to select it.

8 In **PowerMILL explorer**, right-click **Workplanes** and select **Create and Orientate Workplane** > **Workplane at top of Selection**.

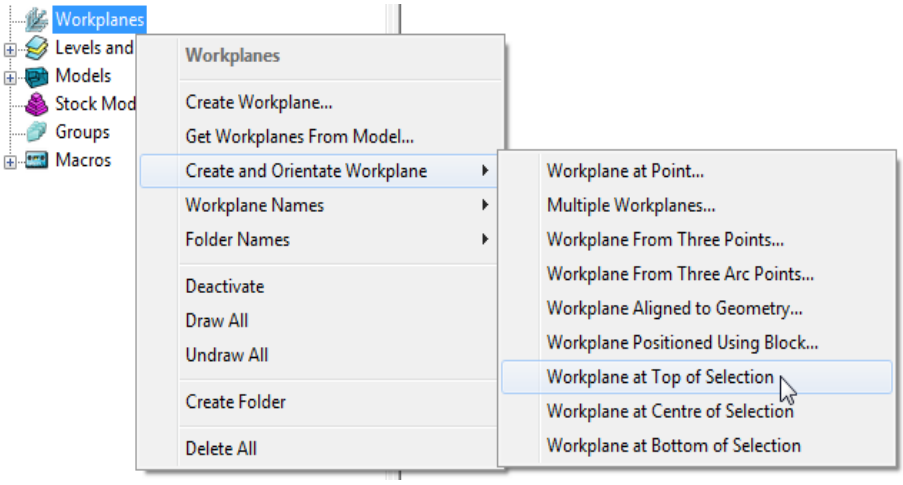

A **Workplane** is created and appears at the top-centre of the selected model. The new **Workplane 1** also appears as an entity in the **PowerMILL *explorer***.

9 Right-click the newly renamed **Workplane 1** and from the local menu select **Activate**.

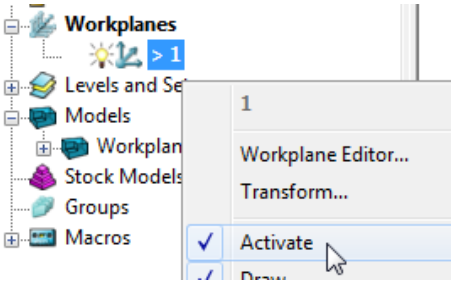

The next step will be to rotate the new **Active** - **Workplane** - **1** to re-orientate the model such that the longer side is aligned to the **X-Axis**.

10 From the same local menu, select **Workplane Editor** to display the **Workplane** editing toolbar.

11 Double click the **Twist about Z** button. This displays the **Twist** dialog.

12 Enter **Angle 270** and click **Accept**.

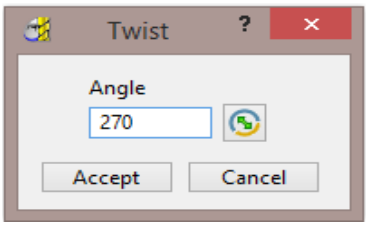

13 Click the **Green Tick** located to the right of the **Workplane** toolbar to accept the changes.

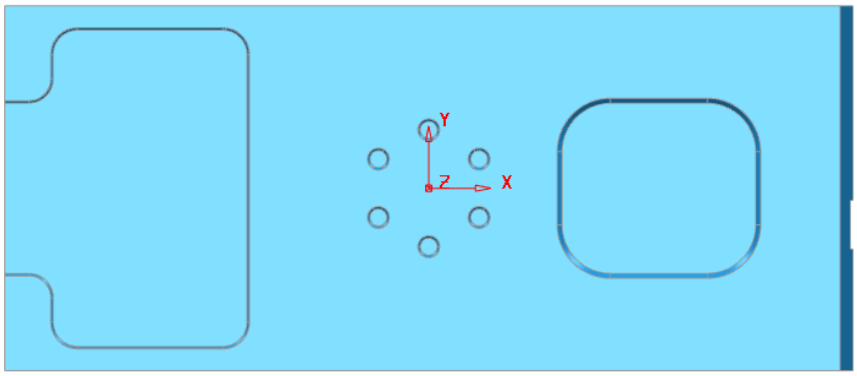

14 Select a **View from top (Z)** to see the effect of the rotated, ***Active Workplane*** providing a more suitable machining position for the model.

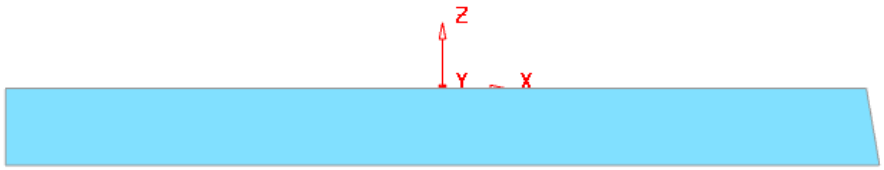

The **Workplane** is shown positioned on the top of the model, which has the longer edge aligned to X.

Workplane (2) - Positioned using the Block

Another method of creating a **Workplane** is from *key points* on the defined **Block**.

15 From the **main** menu, select the **Block** Icon the following form will appear select **Active Workplane** press **Calculate** followed by **Accept**.

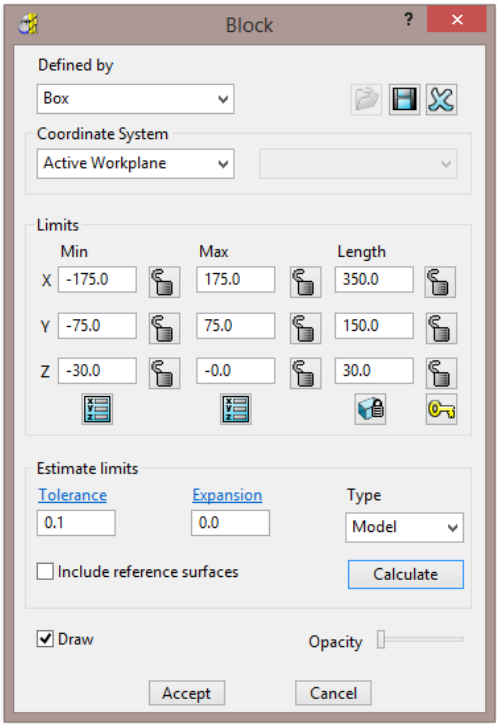

 Copyright © Delcam Ltd

16 In the **PowerMILL explorer**, Right mouse click on **Workplanes** to access the following menus.

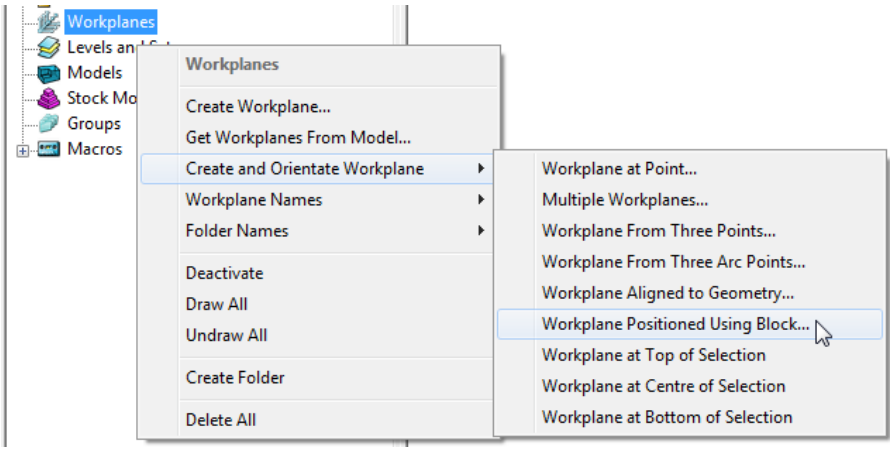

17 Select **Workplane Positioned using Block** from the above menu.

18 Click the new **Workplane** on to the orange *sphere* located at the *centre* of the *bottom face* of the **Block**.

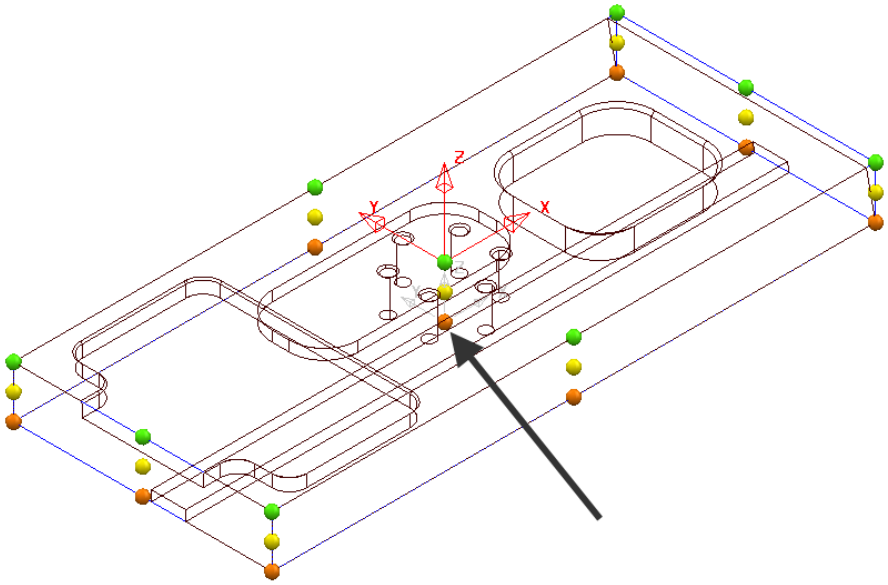

*The new **workplane** will inherit the default name **2**.*

19 Right click on **workplane 2** and from the local menu, select **Activate**.

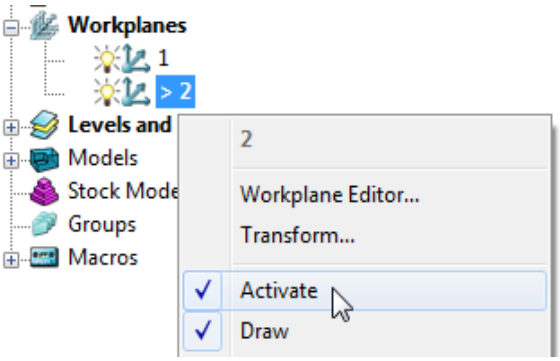

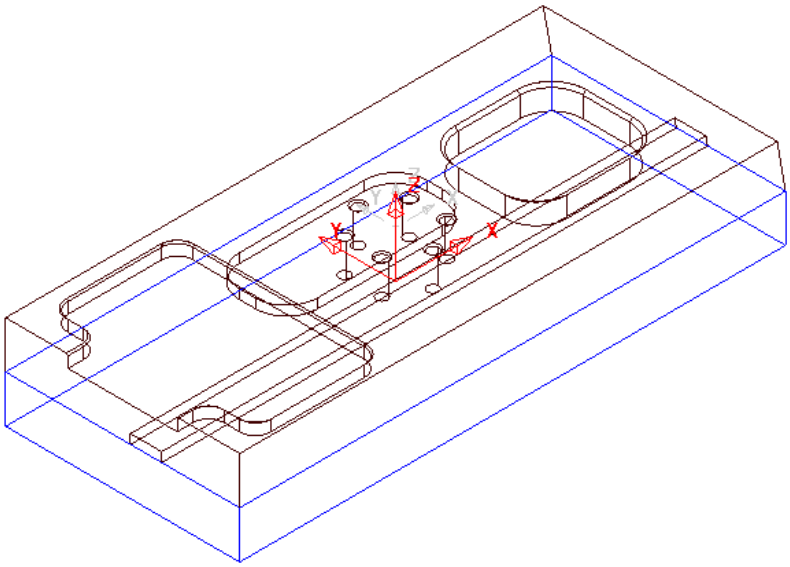

*Note that **Block** definition moves relative to the **active datum**.*

20 **Activate** the new **Workplane** and from the local menu select the **Workplane Editor**.

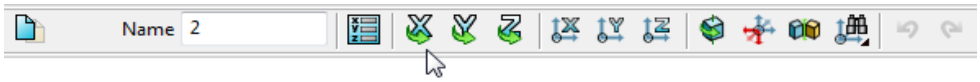

21 Select **X Twist**, and in the dialog enter **180** degrees to make the new **workplane** normal to the underside of the model.

22 Select **Accept** for the new **workplane 2** to be updated.

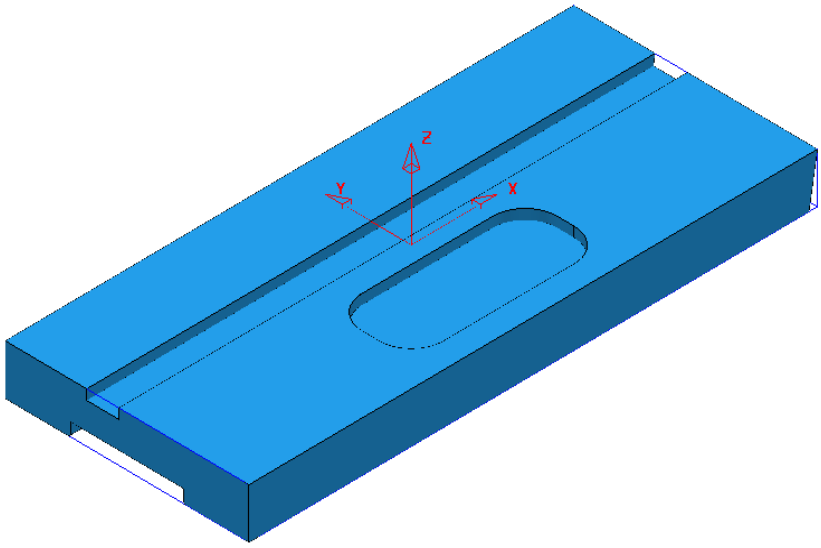

The **Block** returns to the correct position relative to the **model** which in this case is dimensionally the same for both **Workplanes 1** and **2** when either is **Active**.

23 De-activate **Workplane 2**.

 Copyright © Delcam Ltd

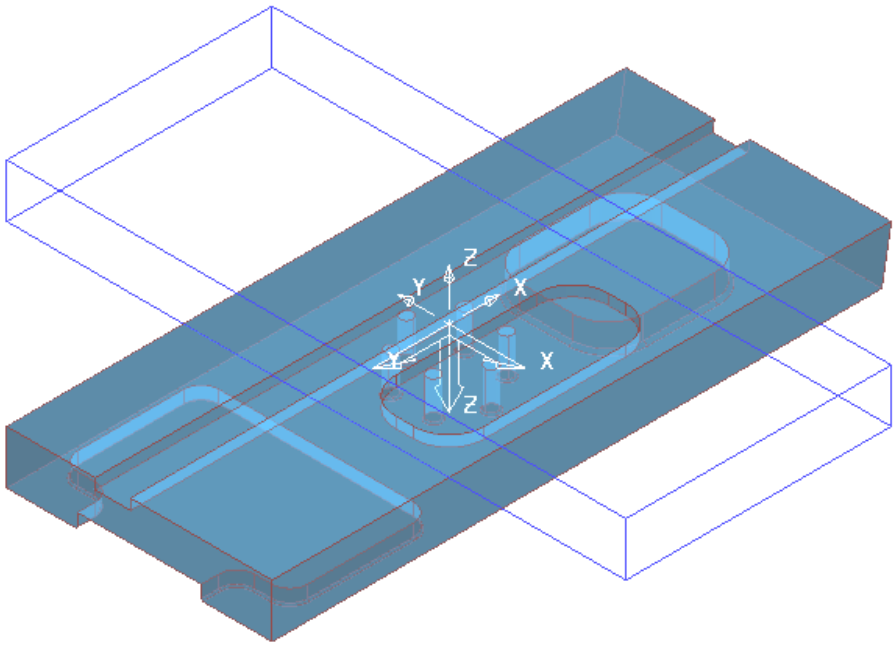

The **Block** is now dimensionally positioned relative to the global **Transform**.

24 Select **File** - **Save Project**:-

The contents of the **Project** saved earlier will be updated.

Block Coordinate System

The above type of **Block** Co-ordinate, definition (**Active Workplane**) is ideal for 3 Axis applications. The physical re-positioning of the **Block** will provide a useful visual warning if the machining datum, **Workplane** is de-activated.

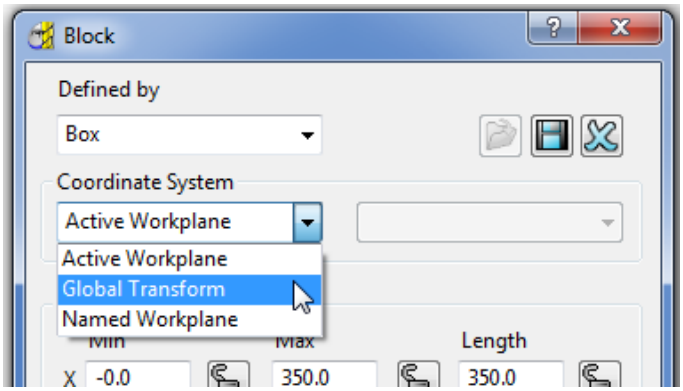

Other **Coordinate System** options become essential for advanced applications such as multi-axis, ***3Plus2*** set ups. In this case the **Block** definition can be fixed to either the **Global Transform** or a **Named Workplane**.

Workplane Aligned to Geometry

This option enables the user to create a **Workplane** perpendicular to a face using **Workplane aligned to Geometry**. The next example shows this in detail. (See original model orientation).

1 Select **File - Delete all** followed by **Tools - Reset forms**.

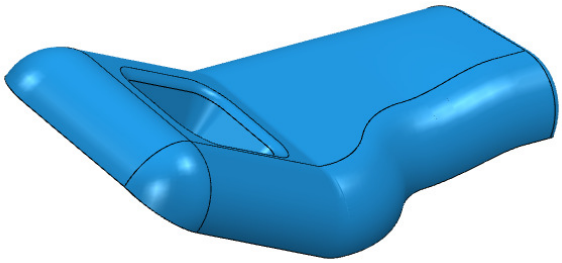

2 **Import** the **Model**:-

.....\PowerMILL_Data\Models\InteriorTrim.dgk

3 With the centre mouse wheel held down, move the mouse to rotate the view of the **Model** so that the base of the pocket is fully visible.

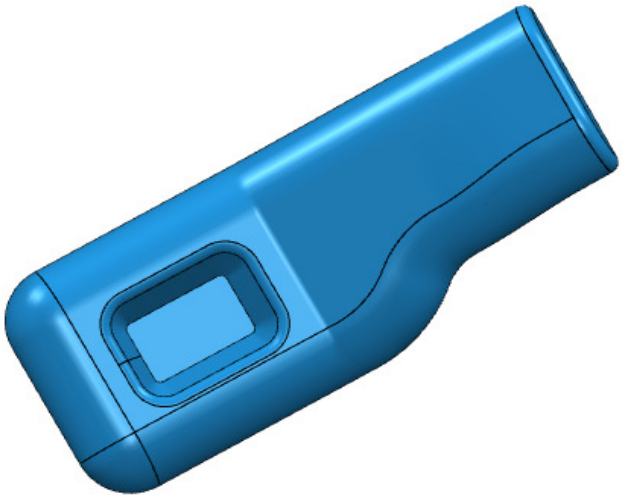

4 Right click on **Workplanes** and select **Create and Orientate Workplane** followed by **Workplane aligned to Geometry**.

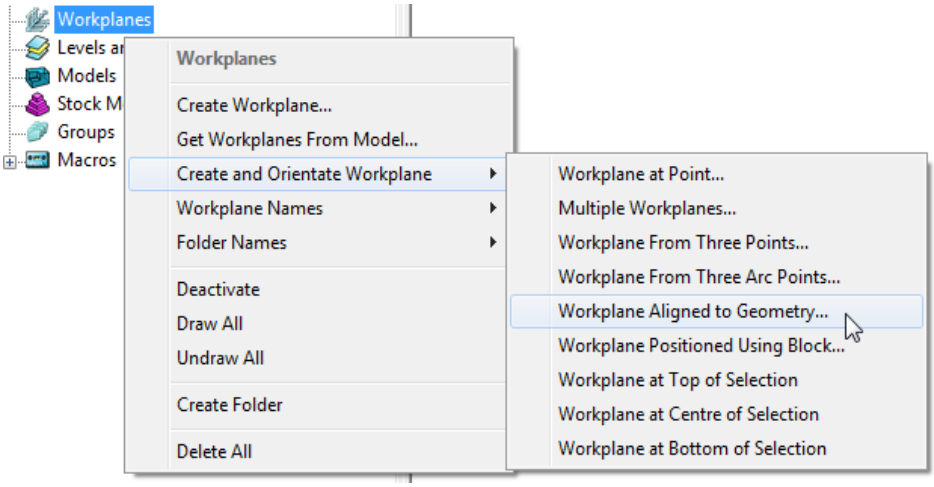

 Copyright © Delcam Ltd

5 Left mouse click on the base of the pocket (as shown below) to locate a new **Workplane** (with its Z-axis normal to the surface).

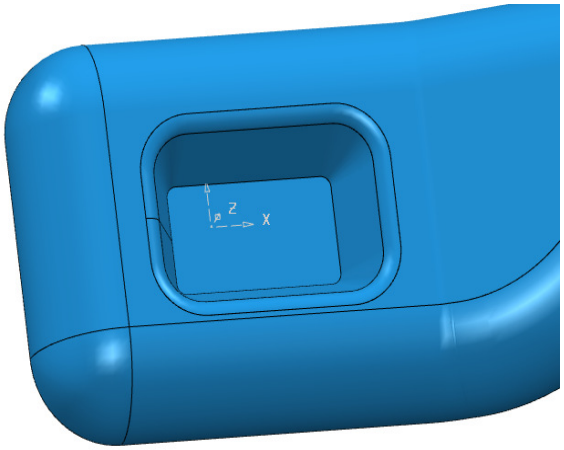

6 In the **PowerMILL** ***explorer***, right click on the new **workplane** and select **Activate**.

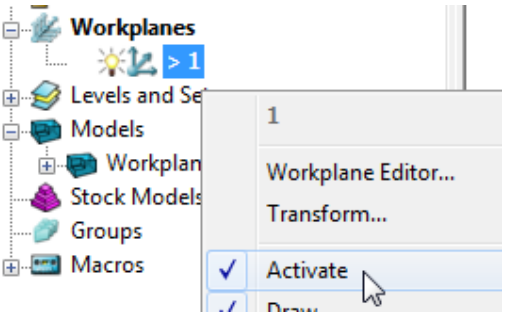

7 Use the left mouse and click on the bottom face of the pocket to make it selected (shaded light blue below right).

8 Then right click on **Workplanes** to open the local menus below.

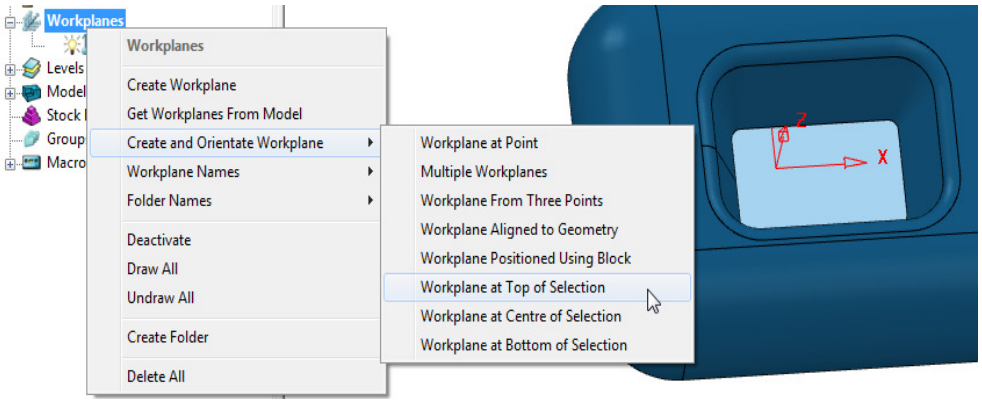

9 From **Create and Orientate Workplane**, select **Workplane at Top of Selection**.

10 The new **Workplane** will be centrally located at the base of the pocket.

11 **Rename** the new **Workplane** as **Datum** and make it **Active**.

12 **Delete** the original **Workplane**.

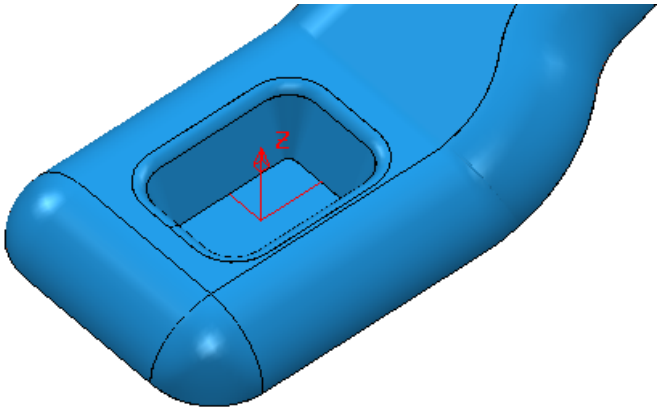

The new **Workplane** is central to the pocket base as shown below.

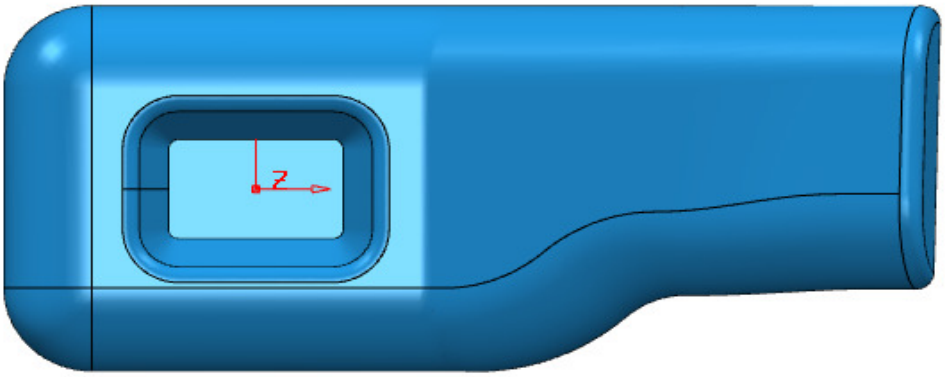

13 **Save** the **Project** as:-

.....\COURSEWORK\PowerMILL_Projects\Workplane-Example2

14 Select **File** – **Delete all** followed by **Tools** – **Reset forms**.

Other local Workplane menu, creation options

a **Create Workplane** produces a single **Workplane** on the current active datum and opens the **Workplane Editor** context toolbar.

b **Create and Orientate Workplane** opens the following form, that provides a selection of specialised **Workplane** creation options.

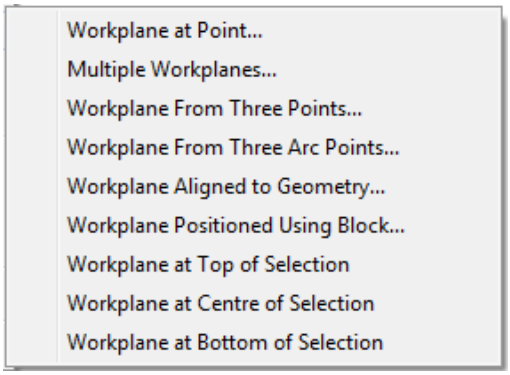

 Copyright © Delcam Ltd

Speaker Core Example - Set Up

1 **Import** the **Model**:-

.....\PowerMILL_Data\Models\speaker_core.dgk

*Use **Button 1*** *in the **Import Model** dialog for quick access!*

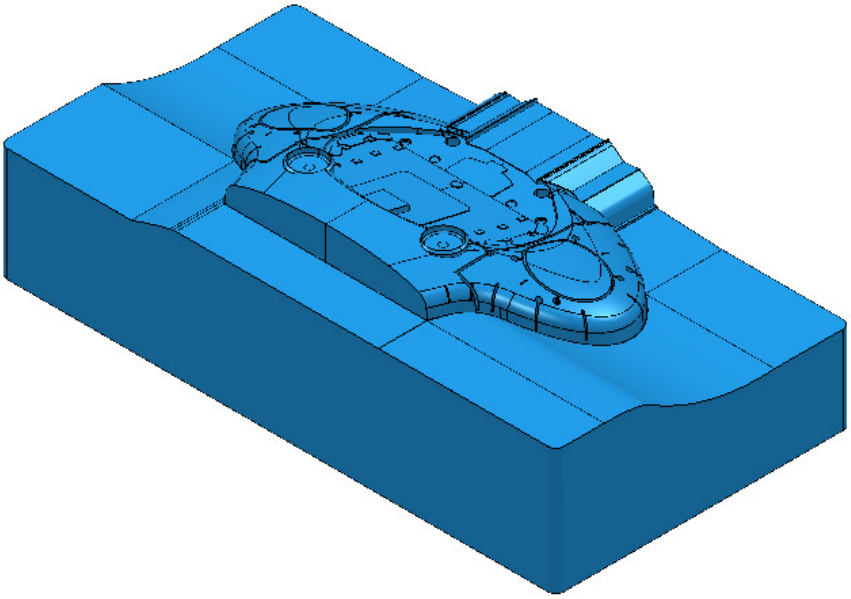

For this example it is required for the long side of the component to be aligned to the **X** direction and not **Y** as shown above.

2 Depress the left mouse key and drag a box across the whole **model** to select all **Surfaces**.

3 From the **PowerMILL *explorer***, select **Workplanes** - **Create and Orientate Workplane** – **Workplane at Top of Selection**.

4 In the **PowerMILL *explorer*** right mouse click on the new **Workplane** and from the local menu select **Workplane Editor**.

5 In the above toolbar, click on the **Z-Twist** option and enter **90** in the form for the **Workplane** rotation angle.

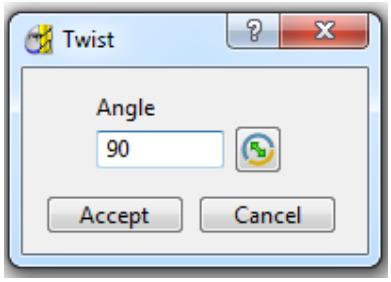

6 **Accept** the ***Twist*** form and then click on the **Green** tick on the toolbar to exit the **Workplane Editor** (and finally accept the changes).

7 **Activate** the new **Workplane 1**.

8 Select an **ISO 1** view.

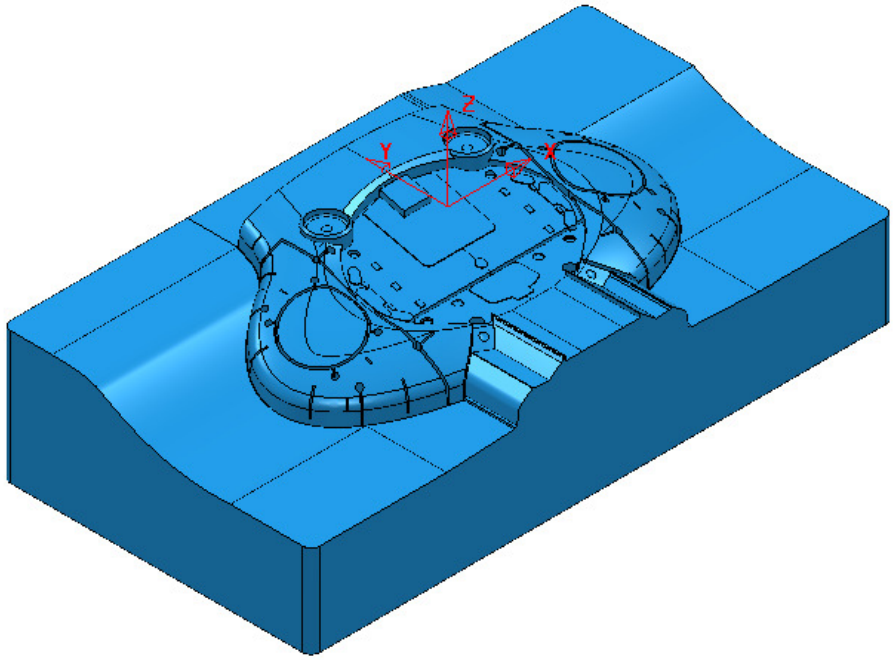

The long side of the component is now running along the **X** direction.

Now that the component model is suitably aligned, the next stage is to create some suitable cutting **Tools** ready to carry out the machining process.

Tool and Holder Definition

For the cutting **Tools** in this example the **Shank** and **Holder** will be included as part of the overall definition.

Note it is also possible to store specific **feeds** and **speed** values in a Tool definition. Not a default setting, but **PowerMILL** can be set to recognise these and automatically update the **Feeds and Speed** dialog on activation of the **Tool**.

9 From the **PowerMILL** ***explorer*** select **Tools** - **Create Tool** - **Tip Radiused**.

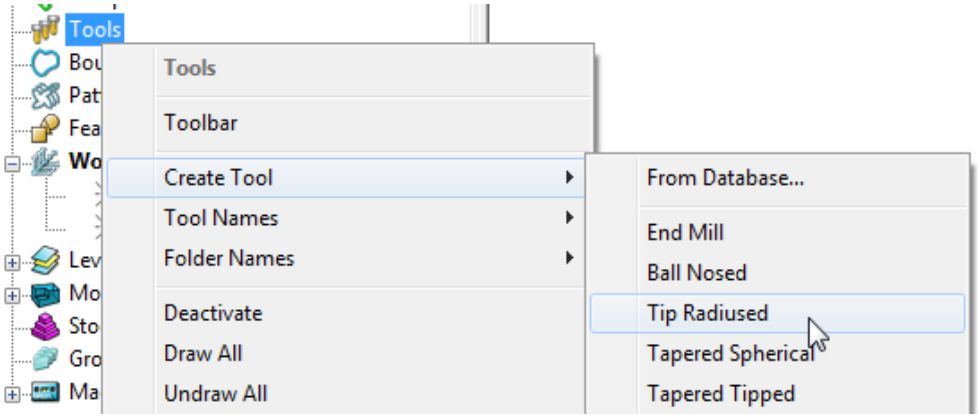

 Copyright © Delcam Ltd

10 In the **Tip Radiused Tool** dialog, input a ***Name* D50TR6** - ***Diameter* 50 - *Tip Radius* 6** - ***Length* 160** - ***Tool Numbe*r 1**.

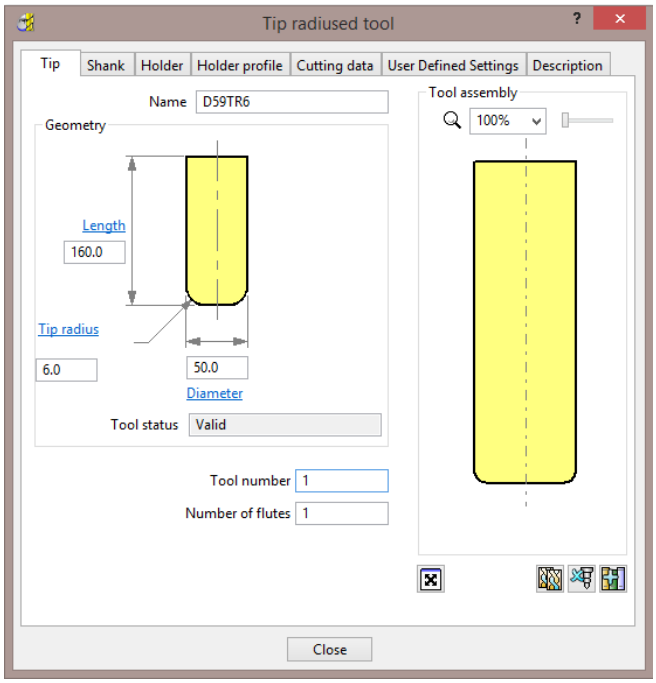

11 In the **Shank** dialog, click **Add a shank component** and enter: **Upper/Lower *Diameter* 50** and ***Length* 100**.

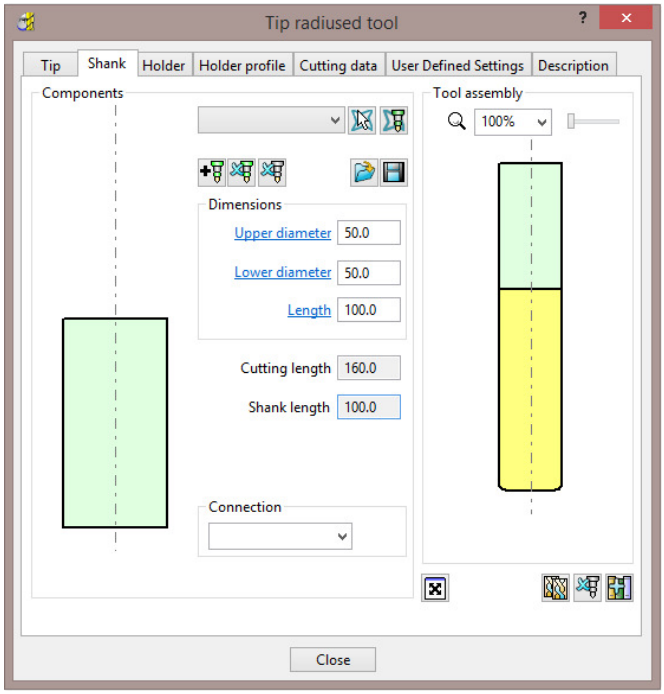

12 In the **Holder** dialog, click **Add holder component** and input:

- **Upper Diameter – 120**
- **Lower Diameter – 90**
- **Length – 50**
- **Overhang - 200**

*The **Overhang** is the vertical distance from the bottom of the **Holder** to the bottom of the tool **Tip**.*

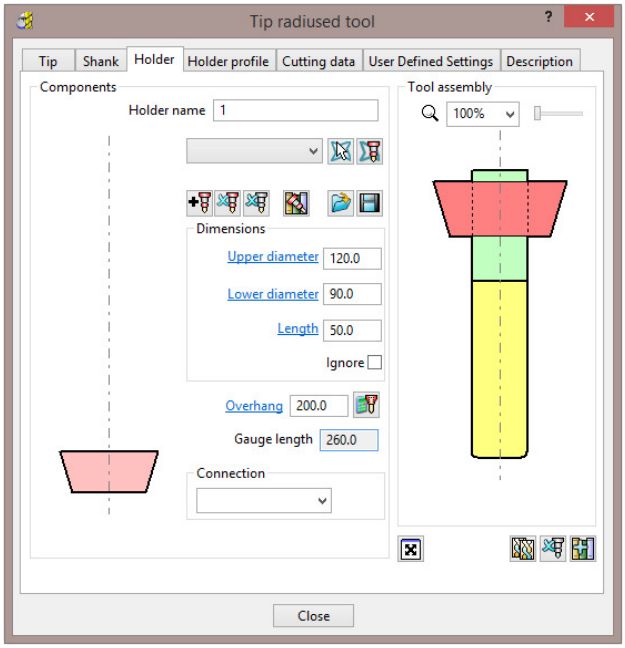

13 In the **Holder** dialog, click the **Add holder component** button. Enter:

- **Upper Diameter – 120**
- **Lower Diameter – 120**
- **Length – 50**

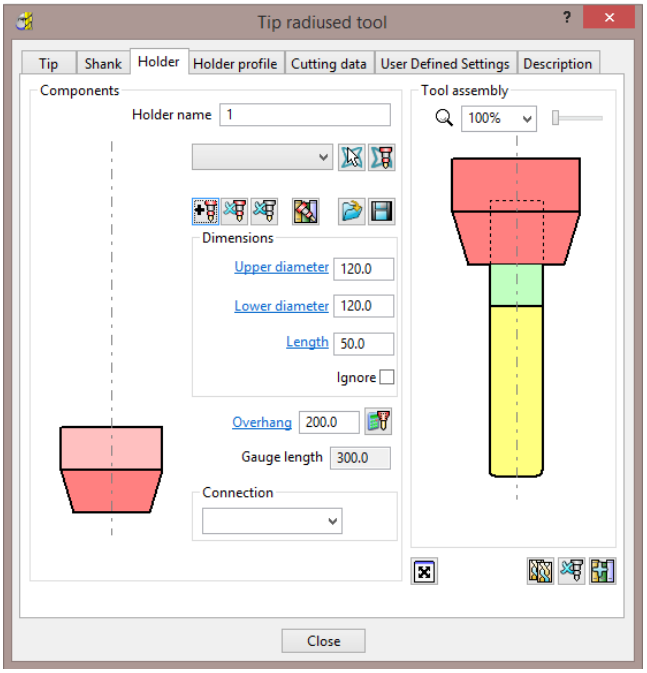

14 In the **Holder** dialog, click the **Add holder component** button Enter:

- **Upper Diameter – 150**
- **Lower Diameter – 150**
- **Length – 25**

 Copyright © Delcam Ltd

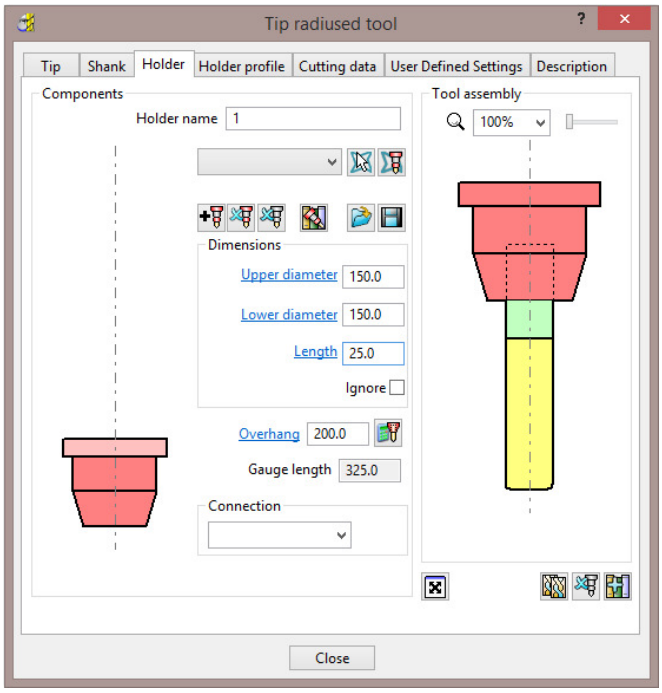

15 **Close** the dialog.

*You can control the style in which the tool is displayed in the graphics window. In the **PowerMILL explorer**, right-click on the **Tool** - **D50TR6** and from the local menu, select **Shaded**.*

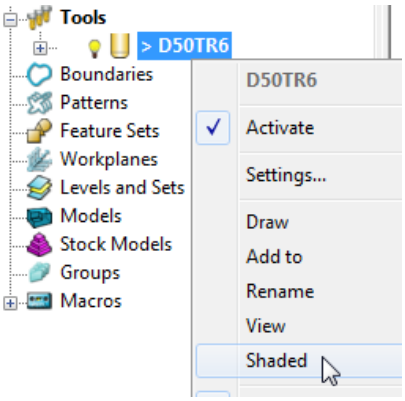

*A **Tool** can be saved outside **PowerMILL** as a permanently stored template (.ptf).*

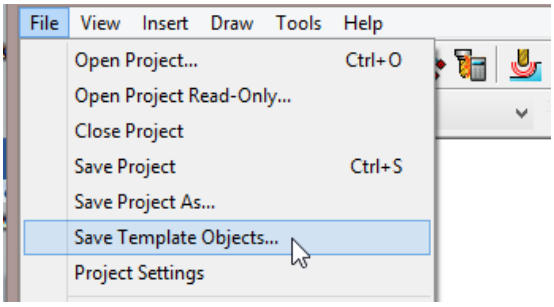

*The tool must be the only item in the **PowerMILL explorer** as all saveable entities will also be added to the template file.*

Block Definition

The default option for **Block** is **Box** (A rectangular volume). Other options include **Cylinder** (a cylindrical volume), a **Triangle** model (eg Casting), and **Picture**/**Boundary** (Extruded 2D wireframe contours).

The dimensions of the **Block** can be entered manually or calculated directly to the Type of entity: **Model**, **Boundary**, **Pattern**, or **Feature**.

The **Opacity** slider controls the degree of shading (from the left, initially wireframe and then graduating from clear to dense).

16 **Calculate** a **Block** using **Defined by** - **Box** and **Type** - **Model**.

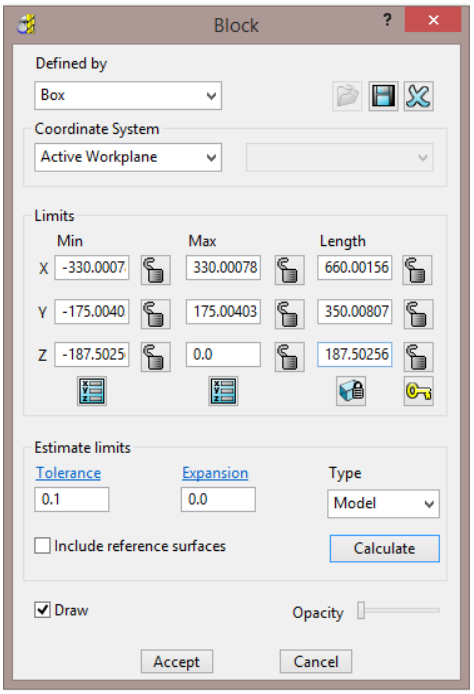

17 Move the **Opacity** slider fully to the left for a wireframe **Block**.

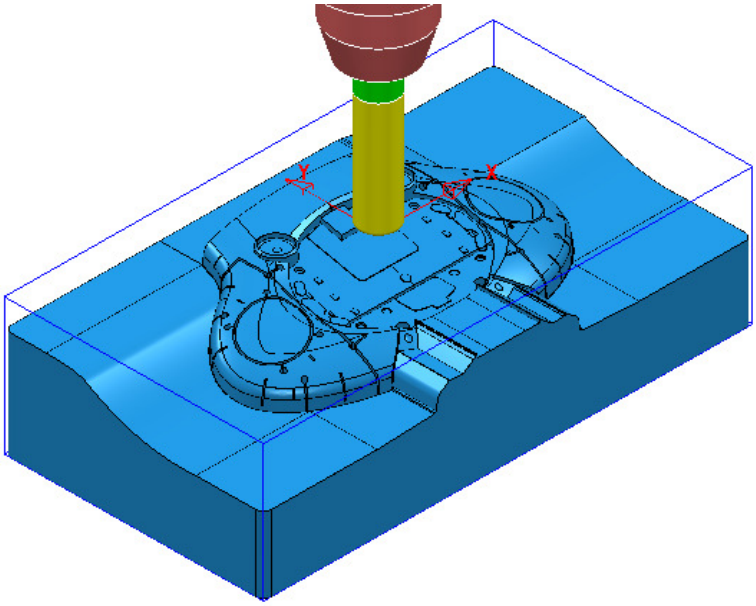

 Copyright © Delcam Ltd

Rapid Move Heights

The **Rapid Move Heights** options enable safe rapid moves between tool tracks clear of the top of the **Model** or **Block** (whichever is the higher).

18 In the **Rapid Move Heights** dialog, click the **Calculate** tab to set **Safe Z** and **Start Z** to the default values of **10** and **5** respectively above the **Model** or **Block**.

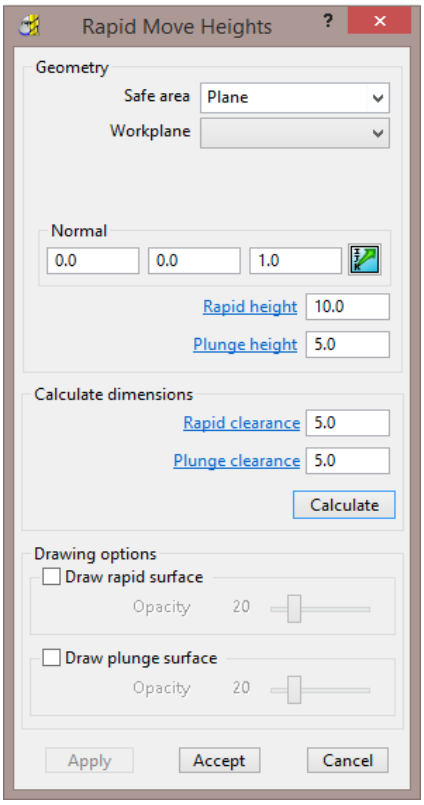

*The **Rapid Move Heights** are calculated relative to the highest point on the **Block** or **Model**.*

*If parts of the **model** are selected, then the de-selected parts will be ignored when the **Rapid Move Heights** are calculated!*

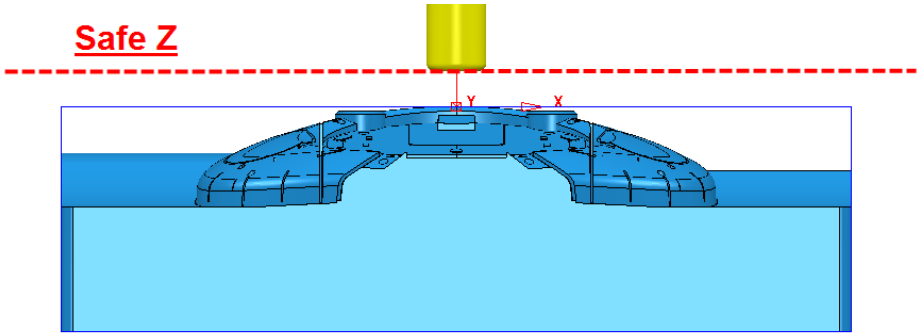

By default the **Tool** will traverse across **Safe Z** and then drop to **Start Z** using a **Rapid** move (eg **G0**). It will then continue downwards at the **Plunging Feed Rate** (eg **G1**).

Start and End Point

The **Start Point** and **End Point** define the first and last points on a toolpath. These can be controlled using 4 different positional options.

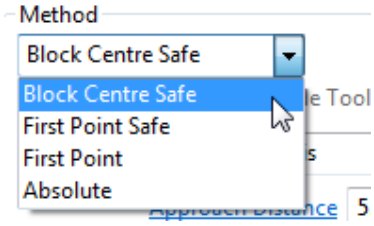

19 In the **Start and End Point** dialog, **Accept** the default settings :

c **Start Point** - **Block Centre Safe**

d **End Point** - **Last Point Safe**

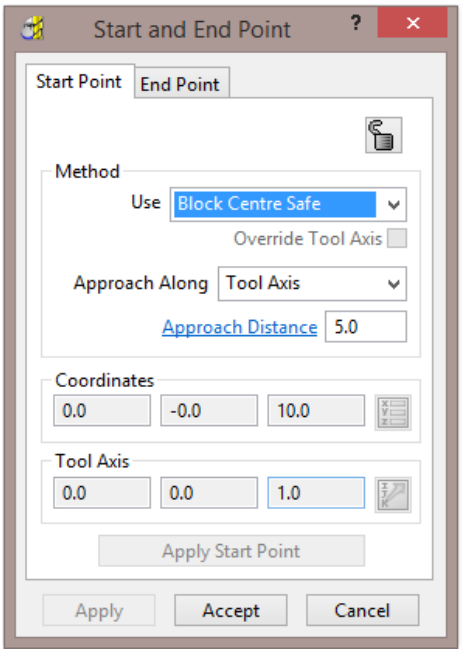

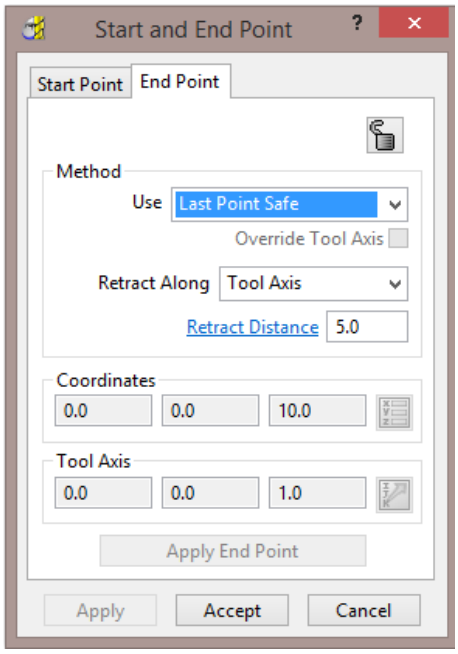

Save Project

20 It is essential to regularly **Save** your work outside the **PowerMILL** session. By saving to a **Project** the contents of the **PowerMILL** ***explorer*** are saved into an external folder.

21 Select **File** - **Save Project As**:-

....\COURSEWORK\PowerMILL-Projects\Spkr-Core

*Do Not Close the **Project** as it will be continued in the following chapter.*

 Copyright © Delcam Ltd

3. 3D Area Clearance

The main strategies for roughing a 3D component model are called **3D Area Clearance**. These provide a choice of 2D material removal methods, which progressively machine the area (**Slice**), up to the component contour, down a sequence of user-defined **Z Heights**.

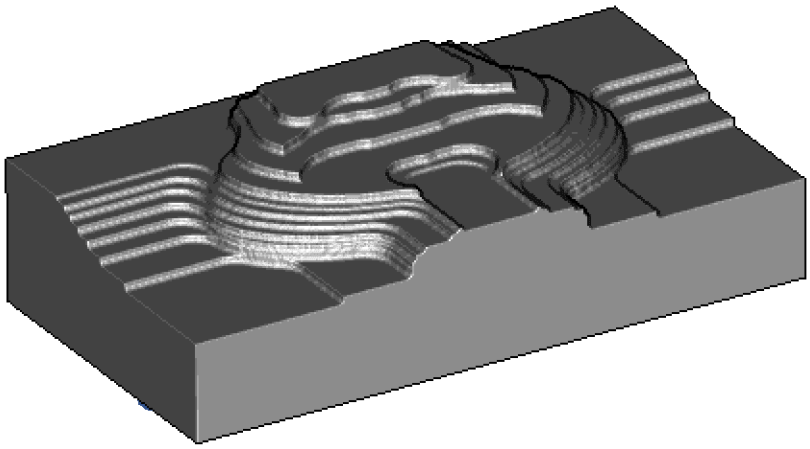

Thickness and Tolerance (Applied to 3D Area Clearance)

Suitable values are required to control the accuracy and amount of excess material to be left on a component by a toolpath. The parameters used for this purpose are preset and are called **Thickness** and **Tolerance**.

Thickness is the amount of extra material specified to remain on the work-piece after machining. This can be applied generally (as shown), or independently as separate **Radial** and **Axial** values within the machining options.

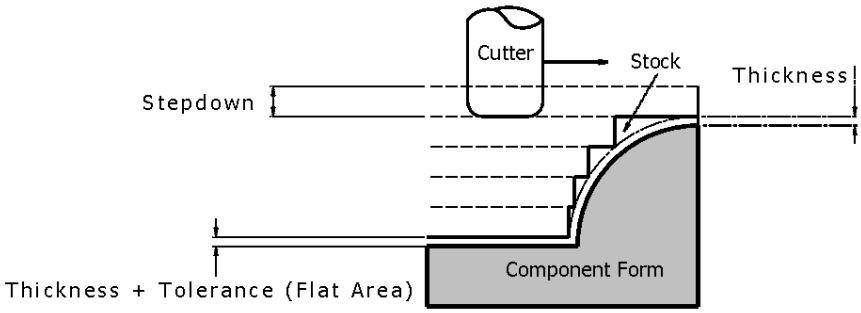

Raster – Model Area Clearance example

The **Raster** (**Model Area Clearance**) strategy follows a series of linear moves across the **Block** limiting to the component form at the active **Z height**. It then, (by default) performs a **Profile** pass around the component to leave a constant **thickness** around the **Slice**.

1. Ensure that the recently saved **Project** (***Spkr-Core***) is still active.
2. **Activate** both the **Workplane** and the **tool D50TR6**.
3. From the **main** toolbar select **Block** and using, ***Defined by*** **Box** – ***Type*** **Model** select **Calculate** followed by **accept**.
4. From the **main** toolbar select **Rapid Move Heights** and in the form select **Calculate** followed by **Accept**.
5. From the **Main** toolbar select **Toolpath Strategies** and from **3D Area Clearance** open a **Model Area Clearance** strategy.

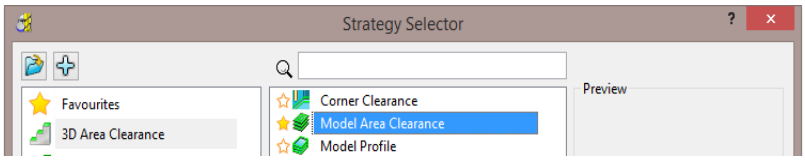

6. Select **OK** to open the **Model Area Clearance** strategy form.

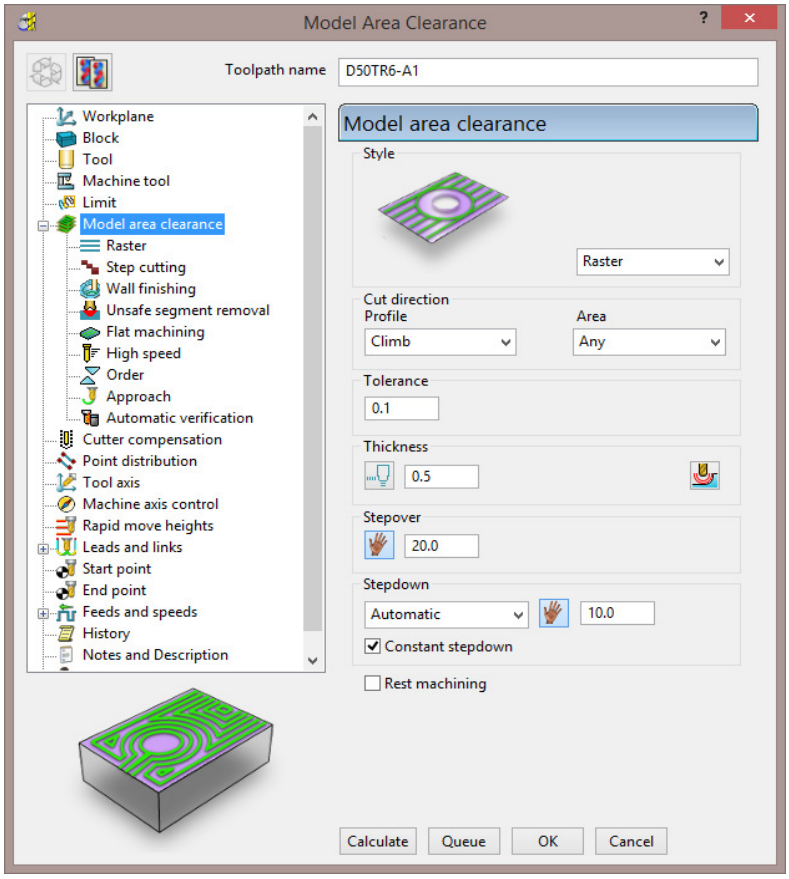

*As soon as the **Model Area Clearance** dialog is opened, the unprocessed **Toolpath** appears in the **PowerMILL explorer**.*

Copyright © Delcam Ltd

7 In the **Model Area Clearance** dialog:

a Enter the **Toolpath name** as **D50TR6-A1**

b Select **Style** as **Raster**.

c For **Cut direction** - ***Area*** select **Any**

d Set **Thickness** to **0.5**

e Set **Stepover** to **20**

f Set **Stepdown** to **10**

8 In the **Model Area Clearance** local ***explorer*** select **Limit**.

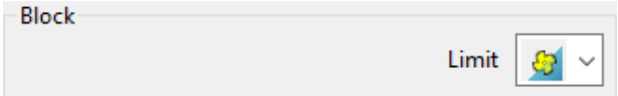

9 In the **Limit** options, **Block** category, switch to ***limit tool center to block edge***.

10 Keeping all other values as default, **Calculate** the strategy.

11 After the **Toolpath** has been created, close the dialog.

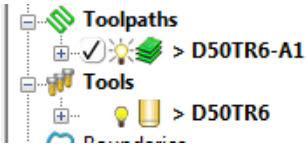

*Double left mouse click on the explorer symbol (in this case) to activate or de-activate the **Toolpath**.*

Click the small + box to expand and view data used to create the toolpath.

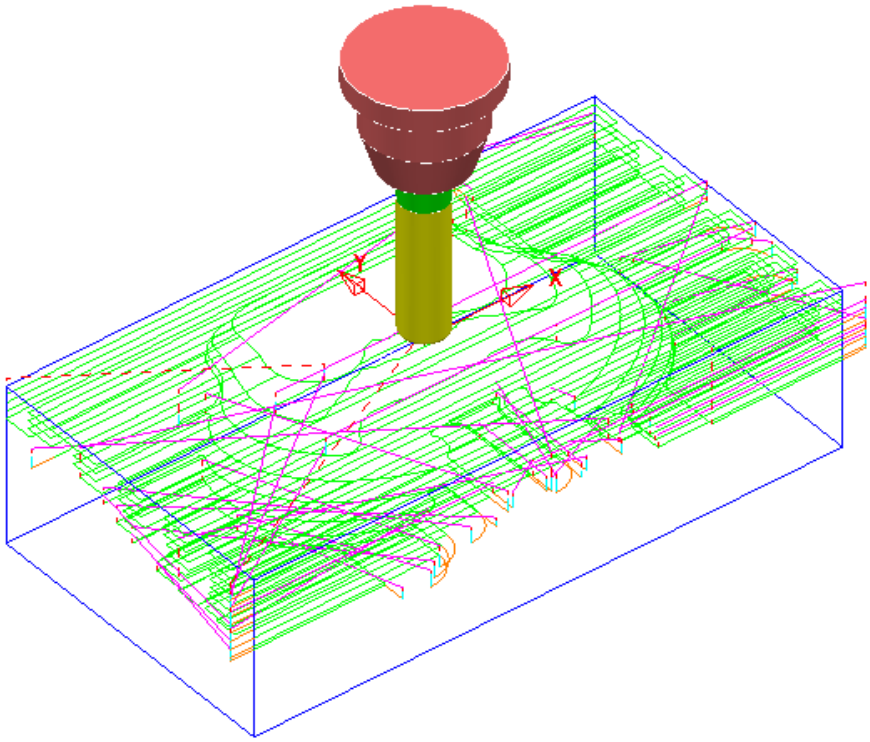

Rapid Move Heights combined with Leads and Links

You can modify the basic **Safe Z** and **Start Z** from the **Rapid Move Heights** dialog.

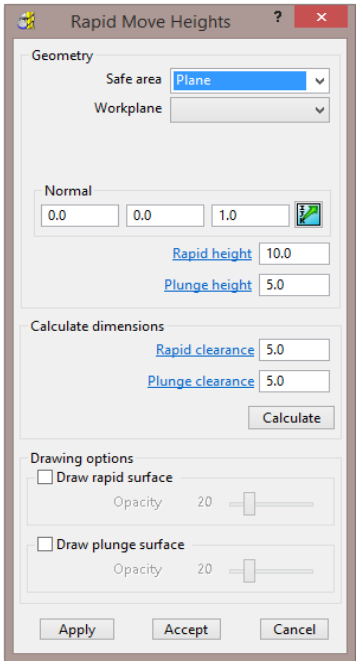

Click the **Calculate** button to set the **Safe Z** and **Start Z** to be at safe distances above the top of the **Model** (whole or selected) or **Block** (whichever is the highest).

***Safe Z** is always above **Start Z**.*

- **Safe Z** specifies a fixed height at which rapid moves across the work piece can safely occur.
- **Start Z** specifies a fixed height at which the slower, plunge feed rate is applied before the tool cuts into the work piece.

Rapid Move Heights works in conjunction with the **Leads and Links** dialog, providing a more comprehensive choice of **Toolpath** link options.

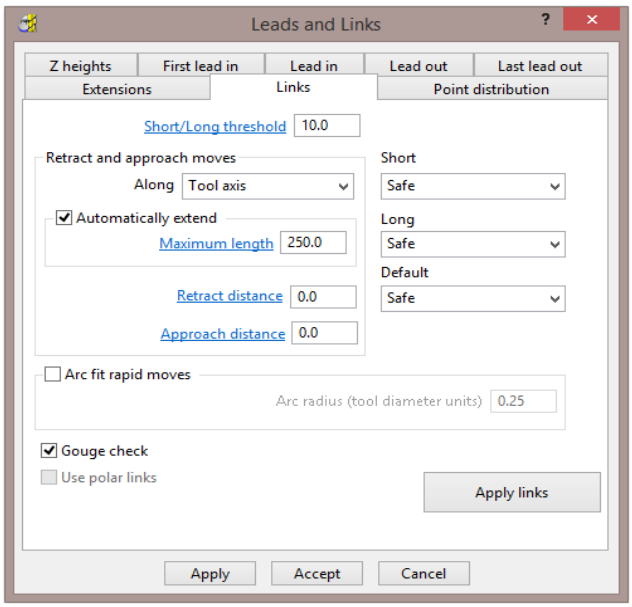

 Copyright © Delcam Ltd

- **Safe** – Applies the plunge feed rate from a fixed height above the job. This is more predictable and reassuring, but the non-cutting (air) moves takes more time and is inefficient, especially in the case of large, deep components.

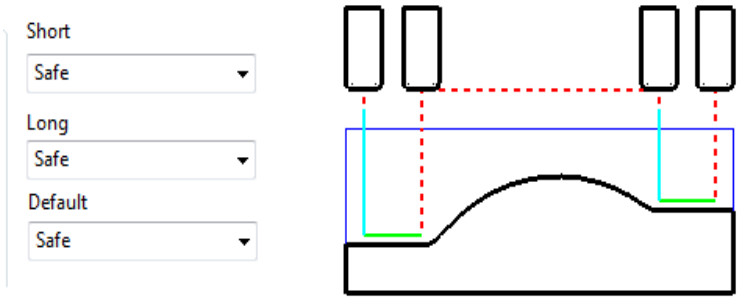

- **Skim** - enables the downward, rapid feed rate to continue to a specified ***incremental*** **Start Z** above the full plunge depth before the slow plunge feed rate 'cuts in'. **Skim** then applies a rapid retract to an ***incremental*** **Safe Z** above the highest point on the component 'in line' with a linear link move to the next plunge position. To cater for all types of machine tools, this move is a **Skim Feed Rate** (G1) (solid purple line), instead of a **Rapid** (G0) (dashed red line).

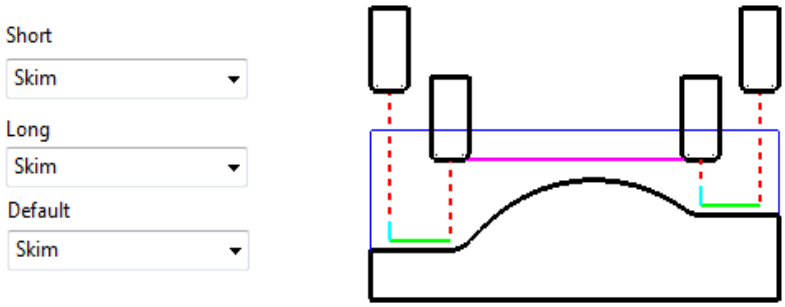

- **Incremental** - applies the rapid feed rate all the way down to an ***incremental*** **Start Z** measured from the full plunge depth, at which point, the slow **Plunge Feed Rate** 'cuts in'. The **Plunge** option differs from **Skim** in that all rapid link moves occur at the ***Absolute*** **Safe Z**.

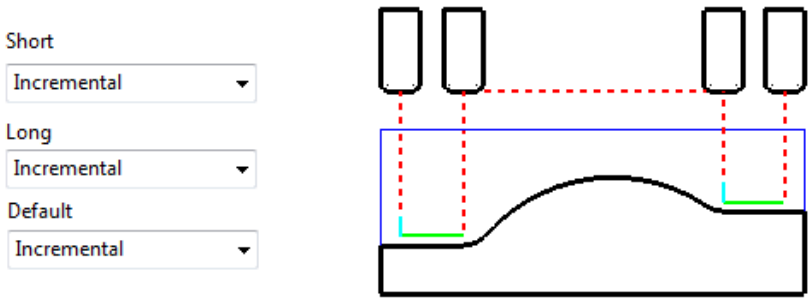

*The default **Link** move settings in the **Model Area Clearance** strategy template are **Short/Long** = **Skim** and **Default** = **Incremental**.*

Feed Rates

The **Feeds and Speeds** dialog uses the **Style** and **Colour** of elements along a toolpath to register the correct Rapid Move or Feed Rate values.

- Fixed **(G0) Rapid** moves = Red Dashed, **Toolpath** elements
- Variable **(G1) Feed Rate** moves = Green/Orange, **Toolpath** elements.
- Plunge **(G1) Feed Rate** moves = Pale Blue, **Toolpath** elements
- Skim **(G1) Feed Rate** moves = Purple, **Toolpath** elements.

1 From the **Main** toolbar, select the **Feeds and Speeds** button and enter the values (shown below) in the **Cutting Conditions** area of the dialog.

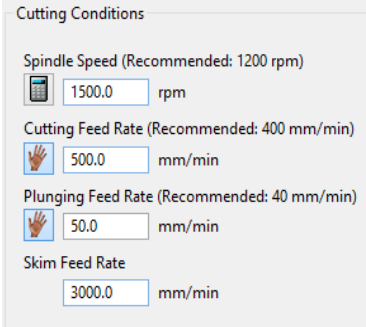

2 Click **Apply** to assign these values to the active **Toolpath** (**D50TR6-A1**) and then select **Accept** to close the dialog.

3 In the **PowerMILL** ***explorer***, right-click on the toolpath and select **Settings...**.

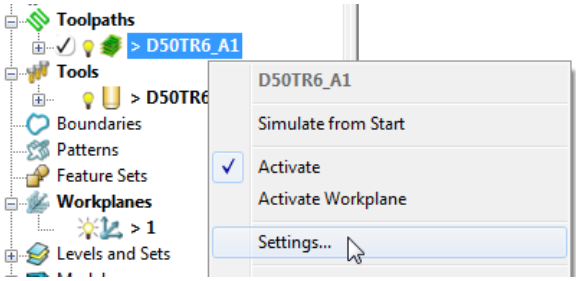

The toolpath can also be activated or deactivated using the ***Activate*** *option in the context menu.*

4 This reopens the **Model Area Clearance** dialog.

5 Select the make a copy of the *Toolpath* button.

6 On the left of the **Model Area Clearance** dialog is a local ***explorer*** window.

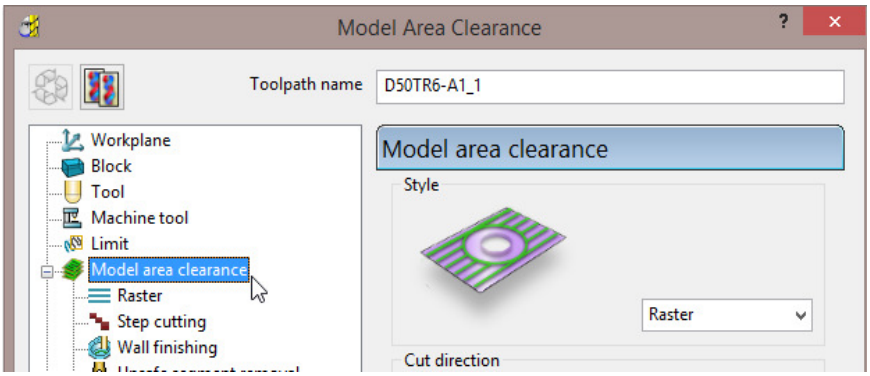

 Copyright © Delcam Ltd

When a local ***explorer*** option is selected the individual page is displayed in the main dialog. This makes it easier to navigate specifically through the pages for the required strategy.

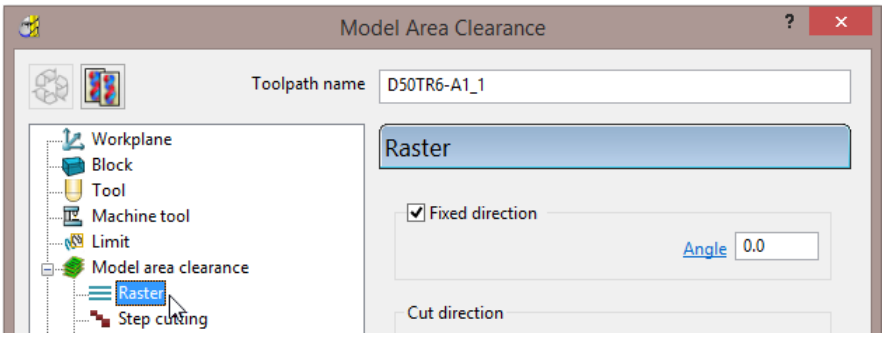

7 From the local ***explorer***, select the ⊞ to the left of **Leads and links** to access the further options **Lead in**, **Lead out**, and **Links**.

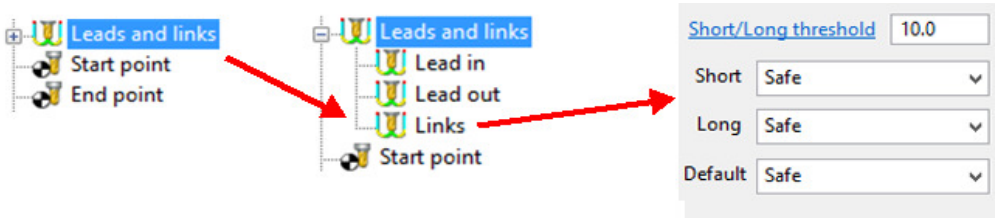

8 In the **Links** page change the **Short**, **Long**, and **Default** link moves to **Safe**.

9 Click **Calculate** to create a new **Toolpath** with the modified settings. Once processing is complete, close the dialog.

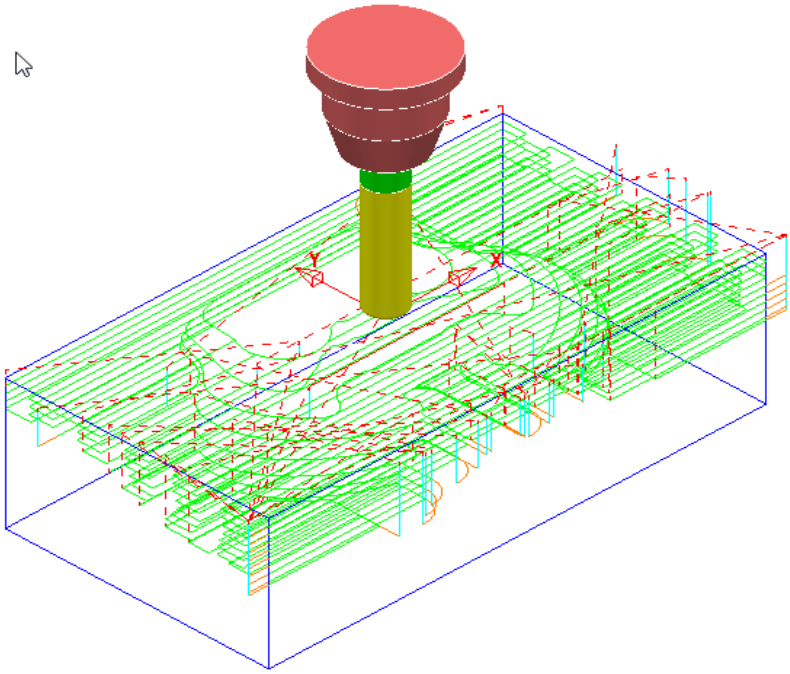

The **Tool** now performs rapid moves (dashed red) at a fixed height (**Safe Z**) above the part (Default height is **10**).

All **Plunge** feedrate (pale blue) moves start from a height between the **Safe Z** and the top of the part (default height is **5**)

Statistics

Provides you with essential information about the active toolpath and associated parameters.

1 In the **PowerMILL *explorer***, right-click the latest **Toolpath D50TR6-A1_1** and from the local menu select **Statistics**.

The dialog with information about the toolpath and its associated settings is displayed.

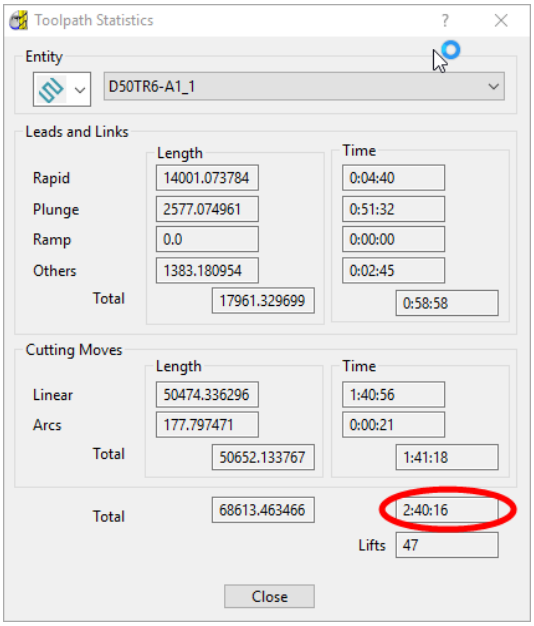

In this case, the total machining time is around **2hrs 40mins**

2 Right mouse click on the original **Toolpath D50TR6-A1** and from the local menu select and view the **Statistics**.

In this case, the total machining time is around **2hrs**.

This large time saving is achieved simply by using **Skim** in the **Links** dialog. In the original toolpath, **Safe** was used, resulting in an excessive amount of the **Link** moves being in fresh air.

Simulating the toolpath

3 Right mouse click on the **Toolpath D50TR6-A1** and from the local menu select **Simulate from Start**.

*If not already displayed the above **Simulation** toolbar will appear automatically.*

4 Use the **Play** button to run the simulation and control the speed with the **slider** bar.

5 If the **ViewMILL** toolbar is not already open, from the **main** pulldown menus select **View** – **Toolbar** – **ViewMILL**.

 Copyright © Delcam Ltd

6 In the **ViewMILL** toolbar, select the **Red** sphere to connect **ViewMILL** to the simulation controls (The sphere will now be **Green** and the current **Block** will be loaded into **ViewMILL**).

7 Select the **Plain Shaded Image** option and run the **simulation** again

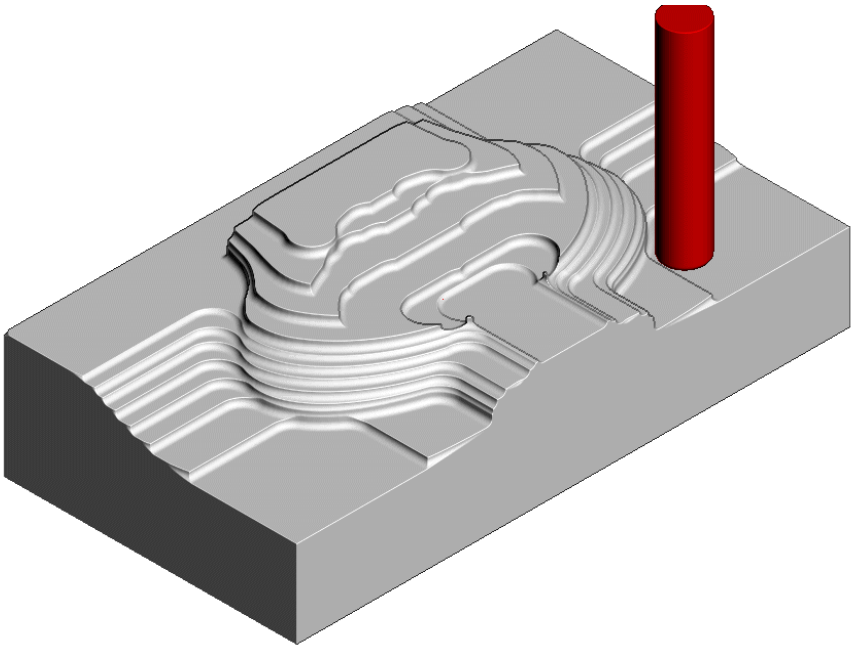

8 Switch the **ViewMILL** to **No Image** to return to the **PowerMILL** session and then disconnect **ViewMILL** from the **simulation** process.

When you toggle back to **PowerMILL**, the **ViewMILL** session still exists in the background, ready to include further toolpaths as required.

If the **ViewMILL** session is still connected, then, even though it is set to **No Image**, **ViewMILL** will continue to update it in parallel with any further toolpath simulations.

Saving the Project

9 From the **Main** menu, select **File** > **Save Project**.

The **Project** (....\COURSEWORK\PowerMILL-Projects\Spkr-Core) is now updated.

We will now ***delete*** the contents of the **PowerMILL *explorer*** and return the **PowerMILL** session back to the original default settings.

10 From the **Main** menu, select **File** > **Delete All**.

11 From the **Main** menu, select **Tools** > **Reset Forms**.

Other Model Area Clearance - Style examples

There are 4 different ***Style*** options in the **Model Area Clearance** strategy.

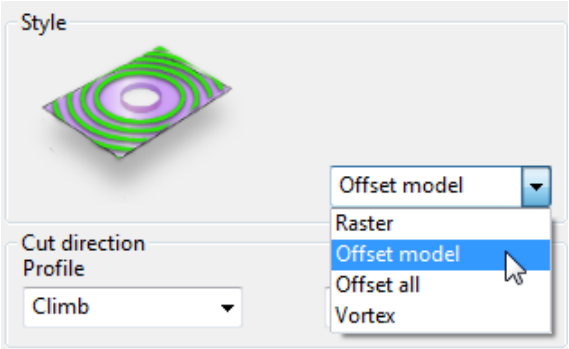

We have already used ***Style*** – **Raster** in the previous example. So for the next section we will simply show the basics of other 3 options (**Offset Model**, **Offset All**, and **Vortex**) on a single Z level.

Offset Model – Basic example

This variant of the **Offset Area Clearance** is primarily designed for ***High Speed Machining***. It provides very consistent tool loading at the expense of increased number of rapid air moves across the component. This strategy, if applied correctly, can go a long way to minimise wear to both tooling and machine.

The strategy is based on the profile around the component at each Z Height, being continually offset outwards, to be trimmed to the limits of the material **Block**.

1 **Import** the **Model**:

.....\PowerMILL_Data\models\Handle.dgk

2 **Save Project As**:

.....\COURSEWORK\PowerMILL_Projects\Handle

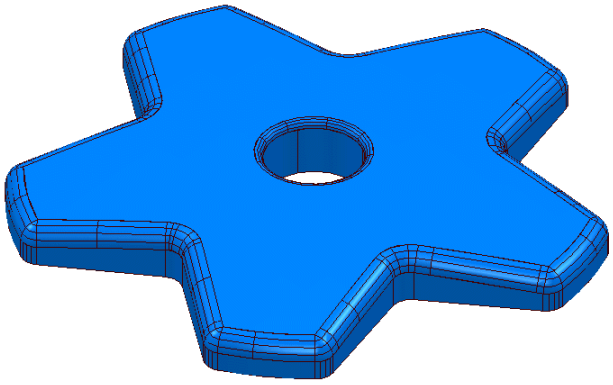

3 Create a ***Dia*** **16**, ***Tiprad*** **3**, **Tool** named **D16TR3**.

4 **Calculate** a **Block** to the full model dimensions.

5 **Lock** the **Z max** and **Z min** values, enter an **Expansion** value of **10** and **Calculate**.

6 In the **Rapid Move Heights** dialog, select **Calculate**.

 Copyright © Delcam Ltd

7 Select **Toolpath Strategies** , and from **3D Area Clearance** open a **Model Area Clearance** strategy.

8 Input data into the pages of the form exactly as shown below.

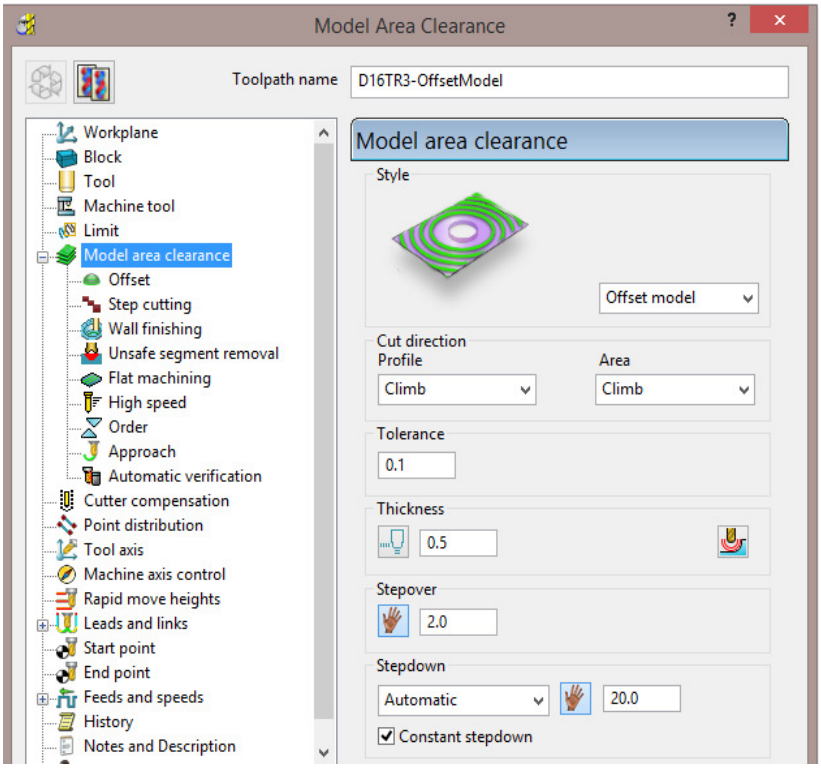

9 Select the **Offset** page and tick the **Spiral** option.

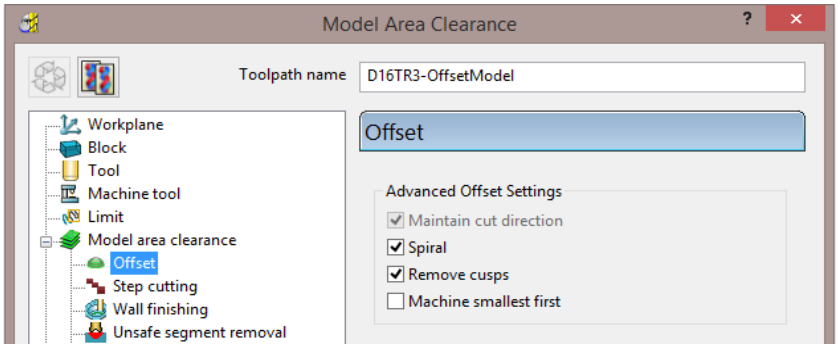

10 Select the **Flat machining** page and select ***Machine flats*** - **Off**.

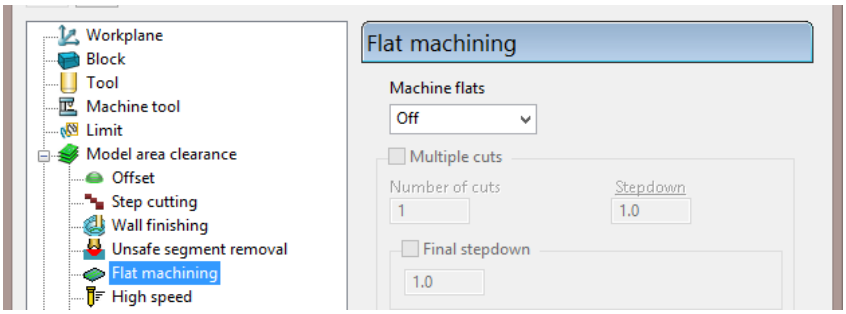

11 At the bottom of the dialog, click **Calculate** to create the **Toolpath**.

12 **Close** the dialog and select an **ISO 1** view.

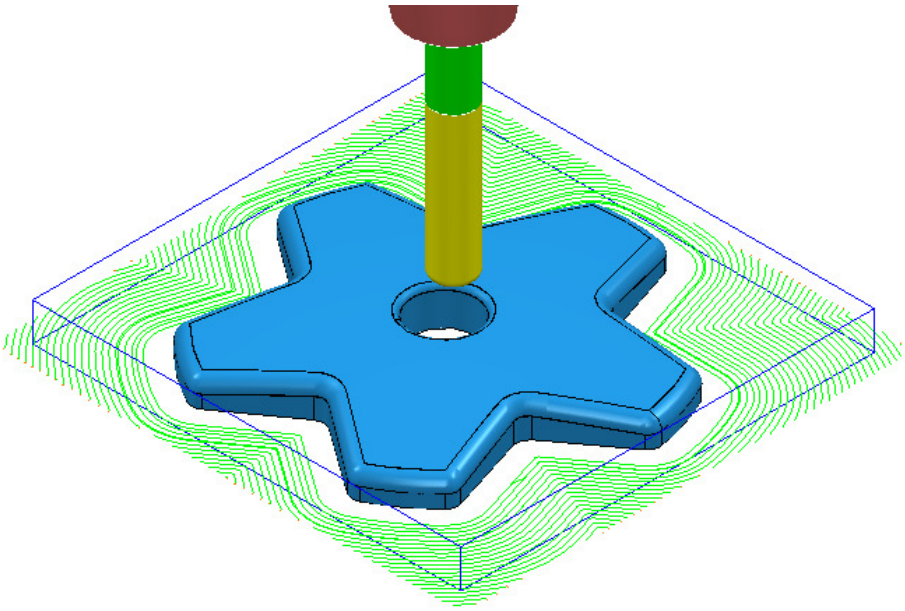

*The **toolpath** is displayed above with the **Leads and Links** undrawn.*

13 In **PowerMILL *explorer***, right-click the **Toolpath** and select **Simulate from Start** to display the **Simulation** toolbar.

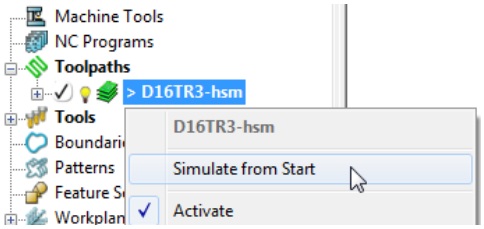

14 On the **Simulation** toolbar, select **Play** to view the **toolpath** simulation.

*To stop the simulation, press the **Esc** key on your keyboard.*

The tool continuously, climb mills, starting each tool track at a distance from the material **Block** to allow the tool to reach optimum **Feed Rate** before contact. The material removal rate in this type of strategy is generally very consistent. The strategy can be further improved using advanced settings to progressively smooth away sharp corners and straighten the toolpath geometry as it offsets further away from the component form.

15 In the **PowerMILL *explorer***, right-click the active **D16TR3-OffsetModel** toolpath and select **Settings** to reopen the **Model Area Clearance** dialog.

16 Click to create an active copy of the **toolpath**.

17 In the **Model Area Clearance** dialog, select the **High speed** page.

 Copyright © Delcam Ltd

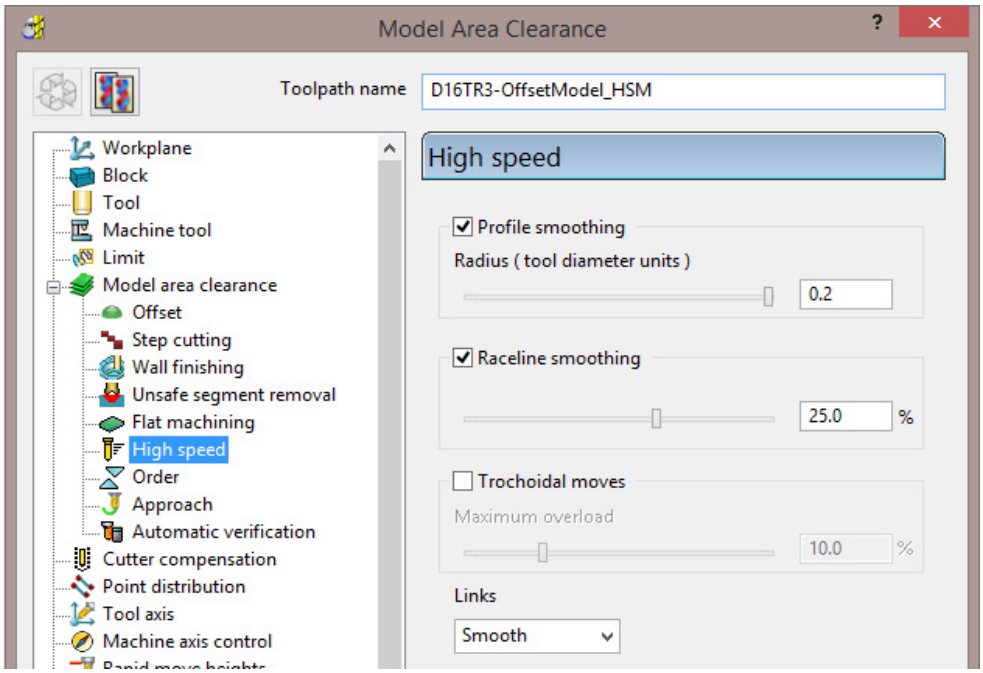

a Select **Profile smoothing** and set **Radius** (**TDU**) to the maximum slider value of **0.2**

b Select **Raceline** Smoothing and set the slider value to **25** (%).

c Click **Calculate** to create a new toolpath **D16TR3_OffsetModel_HSM** with the improved smoothing characteristics.

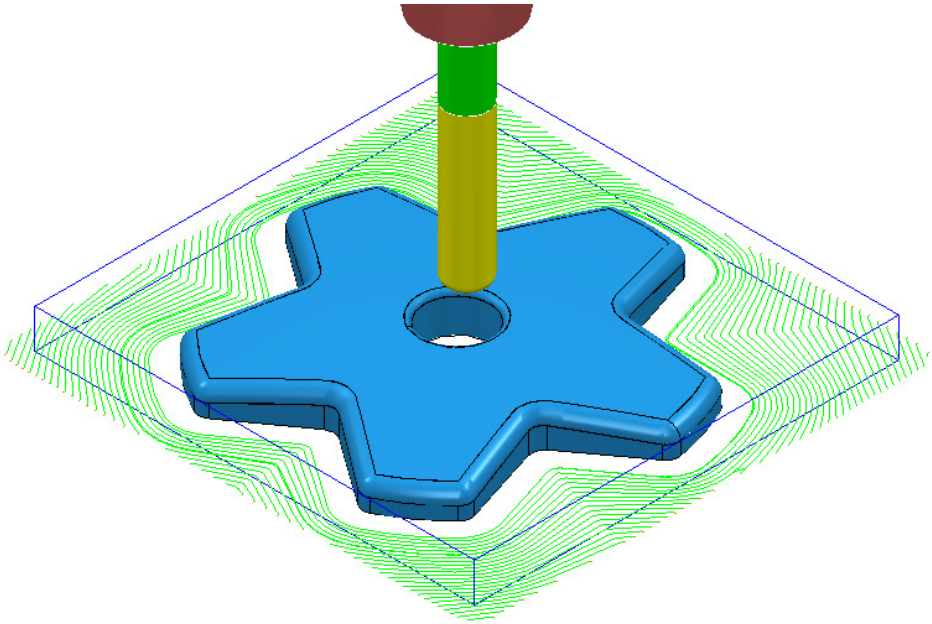

Compare the **Model Area Clearance** toolpaths. Note the progressive straightening of tool tracks on the second strategy with **25% Raceline smoothing** applied.

Offset All – Basic example

This variant of the **Offset Area Clearance** is better suited to softer materials such as modelling foam, resins etc. It will remove material with a larger ***stepover*** and the minimum amount of lifts, but this is more than likely to result in the tooltracks containing sharp changes of direction and an inconsistent removal rate.

1. In the **PowerMILL *explorer***, right-click the active **D16TR3-OffsetModel Toolpath** and select **Settings** to reopen the **Model Area Clearance** dialog.
2. Click to create a copy of the **Toolpath**.
3. **Rename** the new toolpath as **D16TR3-OffsetAll**.
4. In the **Model Area Clearance** dialog, main page select ***Style*** – **Offset All** and then input data as shown below.

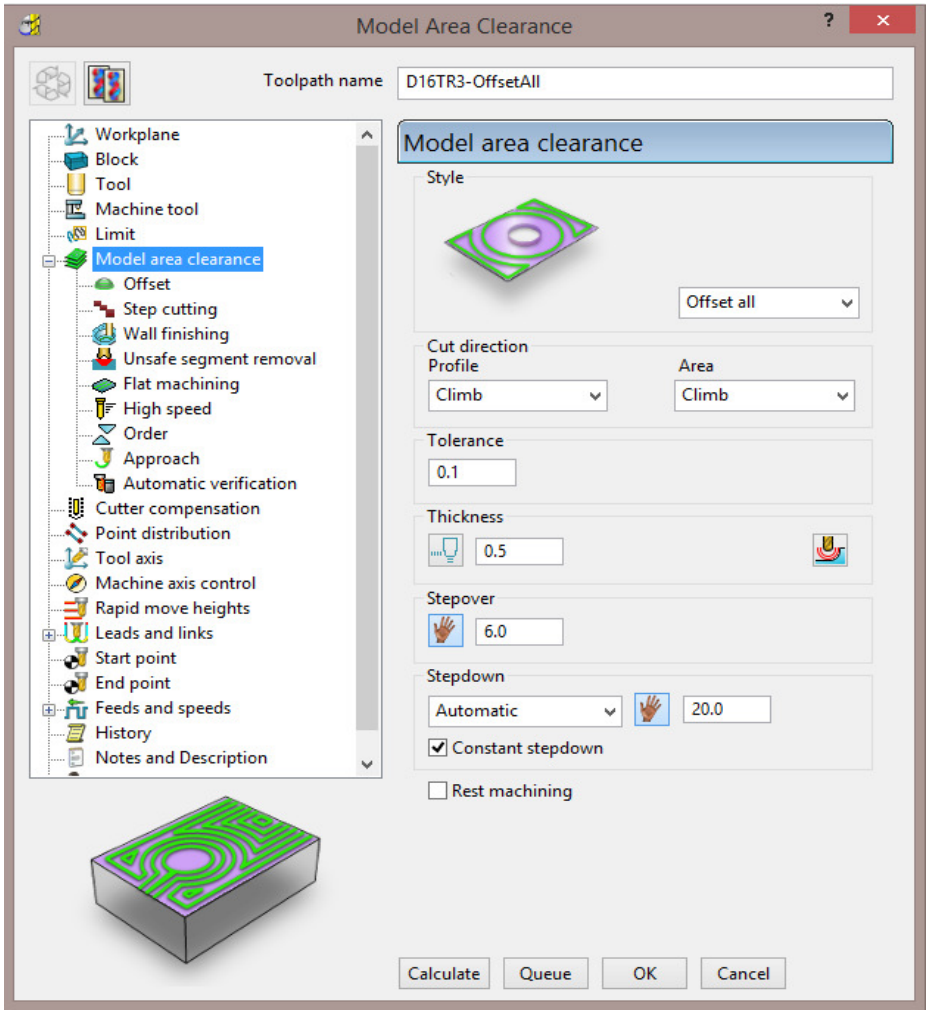

5. In the **Model Area Clearance** dialog, select the **High speed** page and update the data as shown in the following illustration.

 Copyright © Delcam Ltd

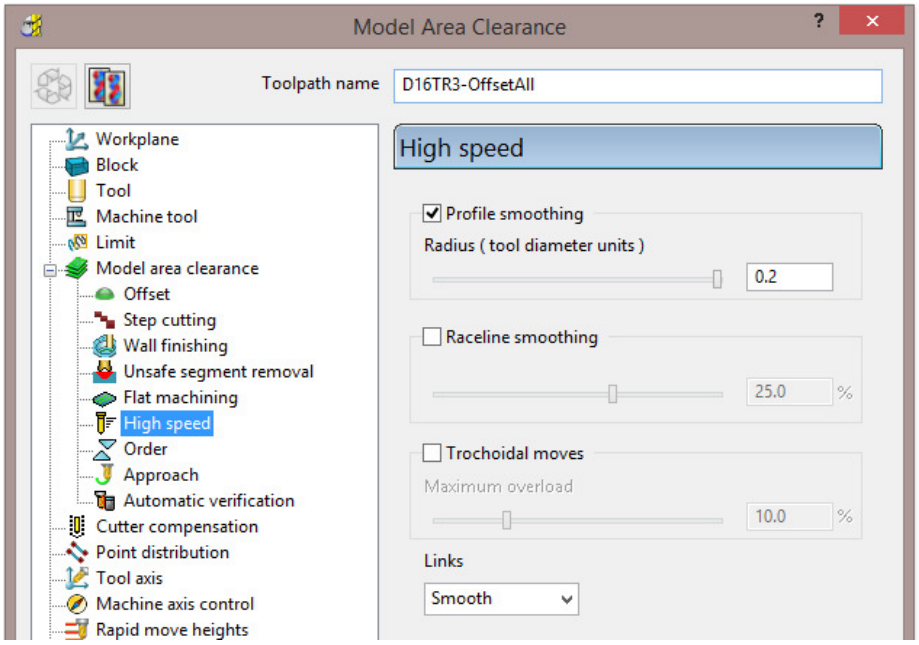

6 At the bottom of the dialog, click **Calculate** to create the **Toolpath**.

7 **Close** the dialog and select an **ISO 1** view.

8 Perform a toolpath **Simulation** to observe the tool movement in this strategy.

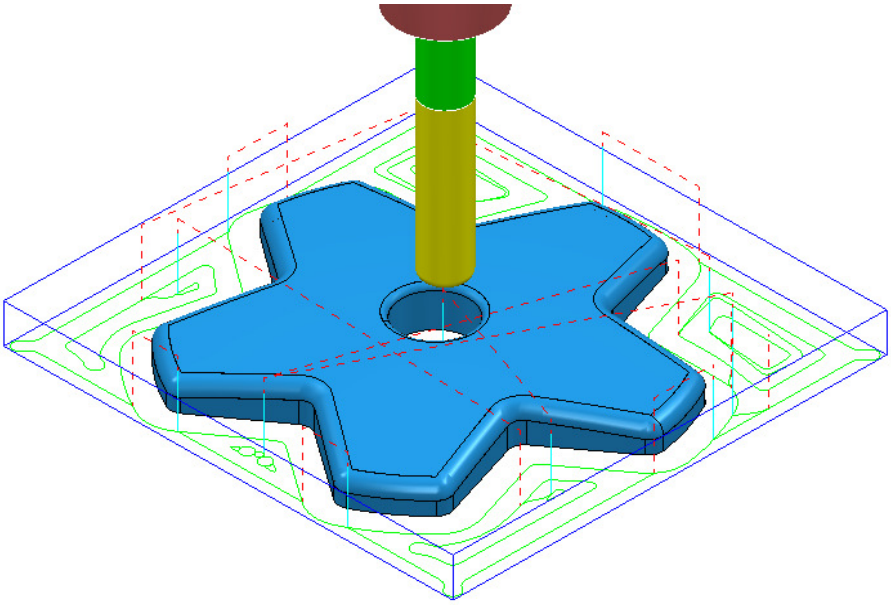

In the above **Offset-All** style toolpath, the tool plunges into the individual areas and profiles it's way outwards following both the component **model** and **Block** forms.

Vortex - Basic example

This specialist, variant of **Model Area Clearance** is primarily designed for use with solid carbide tools on hard materials. Wherever necessary the **Vortex** strategy applies complex, optimised trochoidal, movement to achieve the ultimate control over the loading on a cutting tool.

1. In the **PowerMILL *explorer***, right-click the active **D16TR3-hsm_1 Toolpath** and select **Settings** to reopen the **Model Area Clearance** dialog.
2. Click and create a copy of the **Toolpath**.
3. In the **Model Area Clearance** dialog, main page select ***Style*** – **Vortex**.

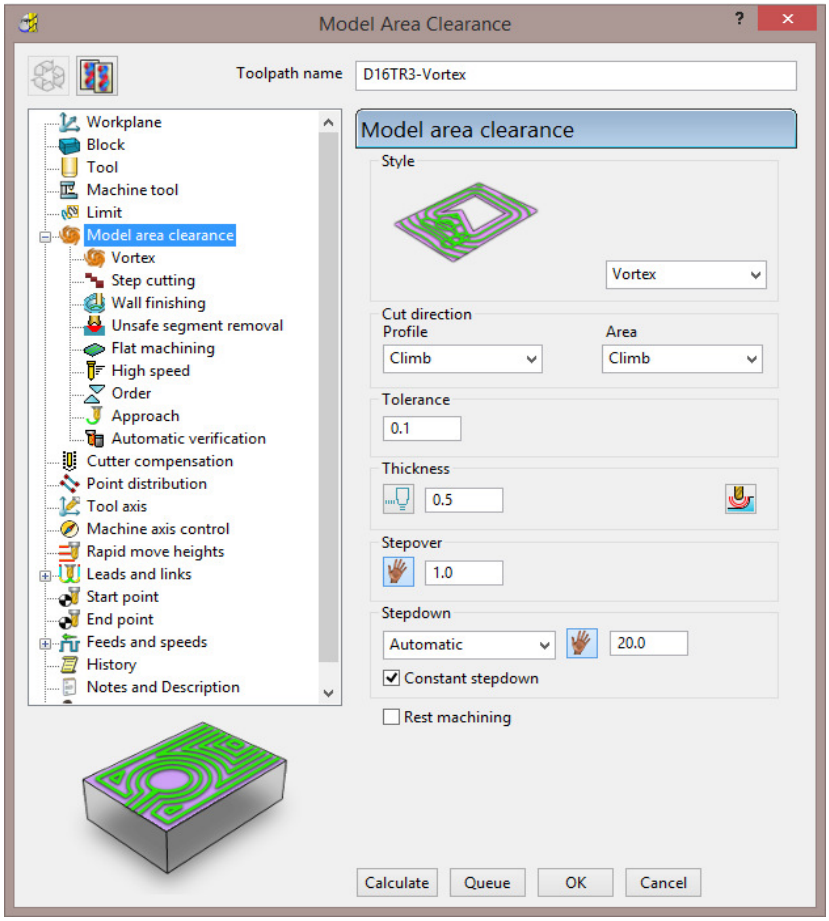

   a. Input **Thickness 0.5**
   b. Input **Stepover 1**
   c. Input **Stepdown 20**
4. Select the **Flat machining** page and set ***Machine flats*** to **Off**.

Copyright © Delcam Ltd

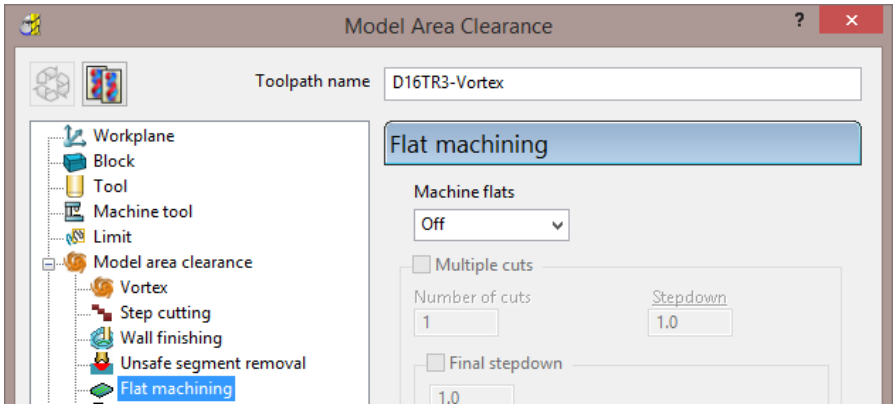

5 Select the **Vortex** Page and set **Minimum Radius (r)** to 3.0

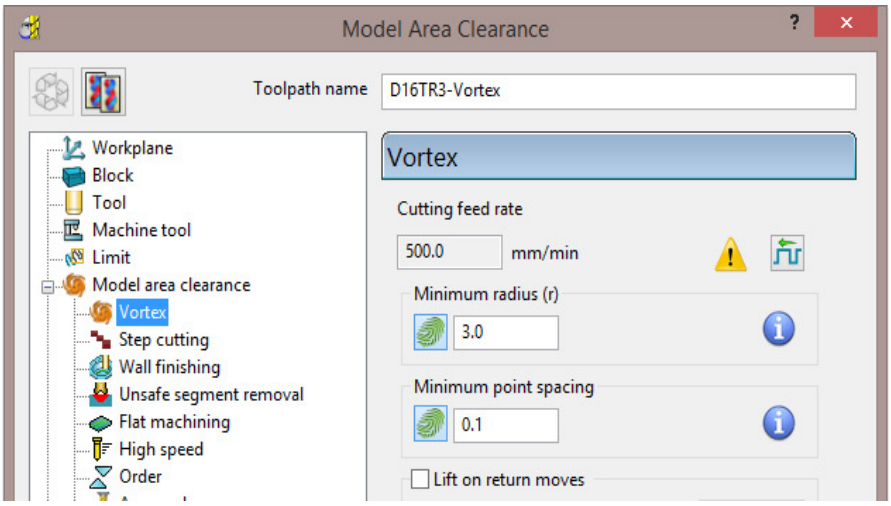

Increasing the **Minimum Radius** value will enlarge the inherent ***Trochoidal*** moves which should in turn enable a higher **Feedrate** to be used with the **Vortex** strategy.

6 Select the ***Unsafe segment removal*** page, tick **Remove segments smaller than threshold** and input a *Threshold (*TDU) value of **0.5**

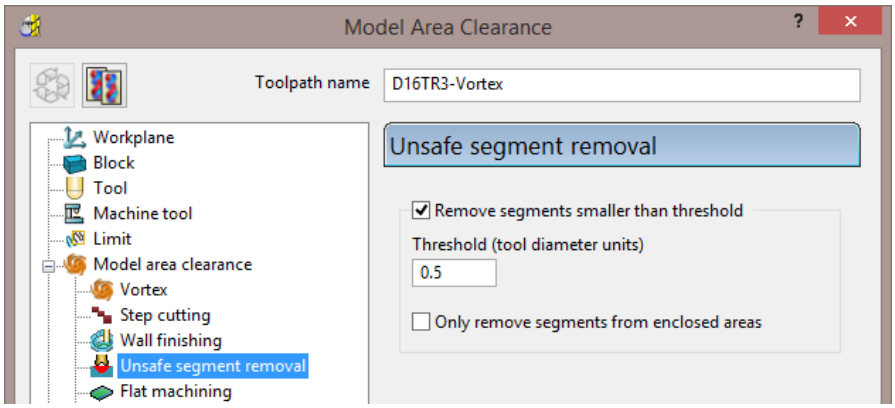

7 At the bottom of the dialog, click **Calculate** to create the **Toolpath**.

8 Close the dialog and select an **ISO 1** view.

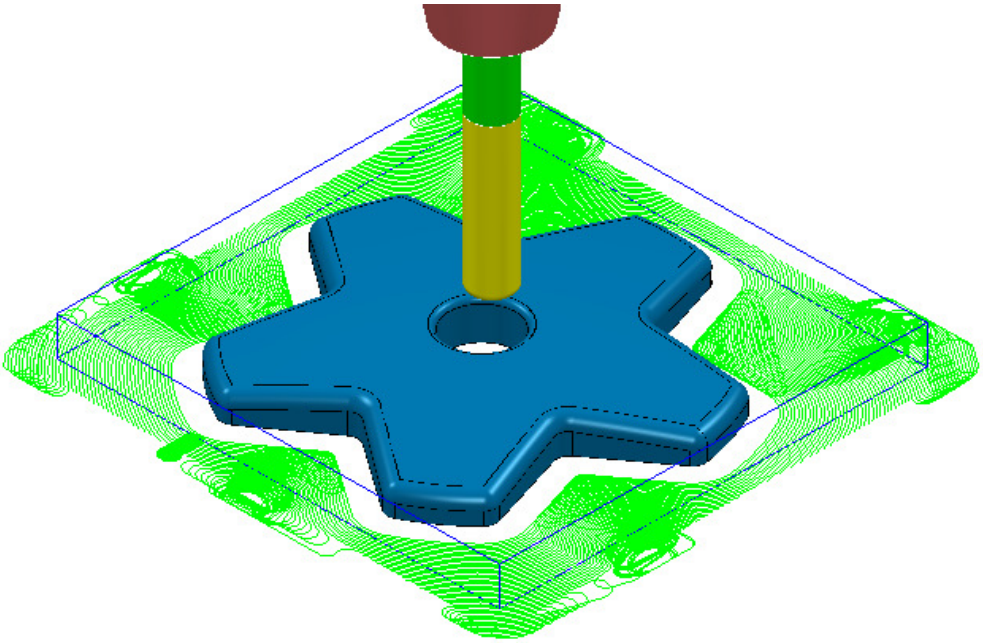

9 Select **File** - **Save Project** to update the contents of:-

.....\COURSEWORK\PowerMILL_Projects\Handle

10 From the **Main** pull down menus, select **File** > **Delete All**.

11 From the **Main** pull down menus, select **Tools** > **Reset Forms**.

 Copyright © Delcam Ltd

Area Clearance – Unsafe Segment Removal

This option is designed to filter out machining of confined areas that involves a small movement of the cutting tool. In the following example, it is applied to prevent a relatively large tool attempting to plunge into a deep pocket area where a smaller tool would be a better choice.

1 **Open** the read-only **Project**:

.....\PowerMILL_Data\Projects\MountingBlock-Start

2 **Save Project As**:

.....\COURSEWORK\PowerMILL-Projects\MountingBlock

3 **Activate** the **Toolpath** named **No-AreaFilter**.

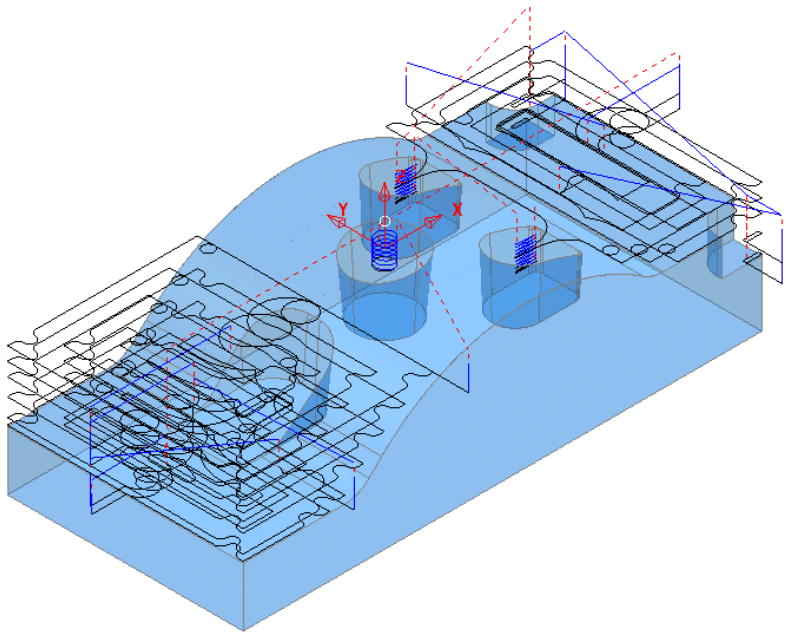

The existing toolpath allows the cutter to machine into confined areas. This results in sudden sharp changes of cutting direction and excess loading on the tool.

4 Right-click on the toolpath named **No-AreaFilter** and from the local menu, select **Settings** to open the original **Model Area Clearance** dialog.

5 Click the **Create a new toolpath based on this one** button, to create a copy of the toolpath.

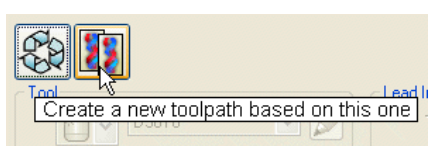

6 **Rename** the copy of the toolpath as **AreaFilter**.

7 In the **Model Area Clearance** dialog, select the **Unsafe segment removal** page.

8 Tick the option, ***Remove segments smaller than threshold***.

9 Input a ***Threshold (tool diameter units)*** value of **0.5**

10 Un-tick the ***Only remove segments from enclosed areas*** option.

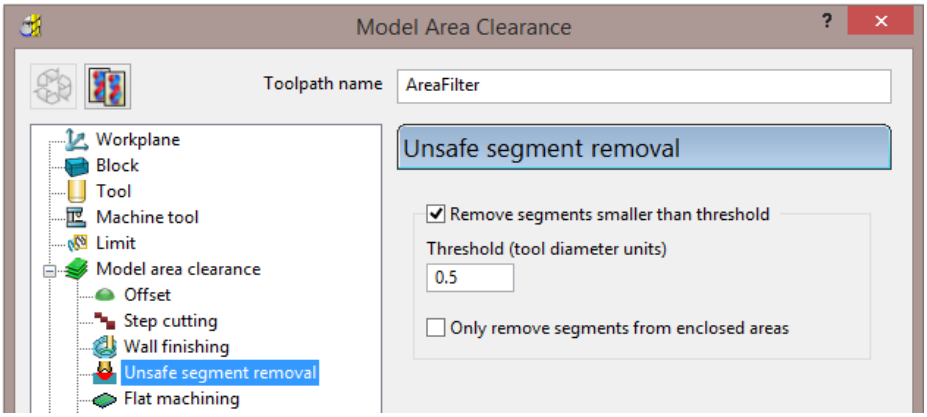

All tool tracks spanning a distance less than the Tool Diameter (TDU) are filtered out and will not appear in the final toolpath.

11 **Calculate** the **Model Area Clearance** dialog and once processing is complete, close the dialog.

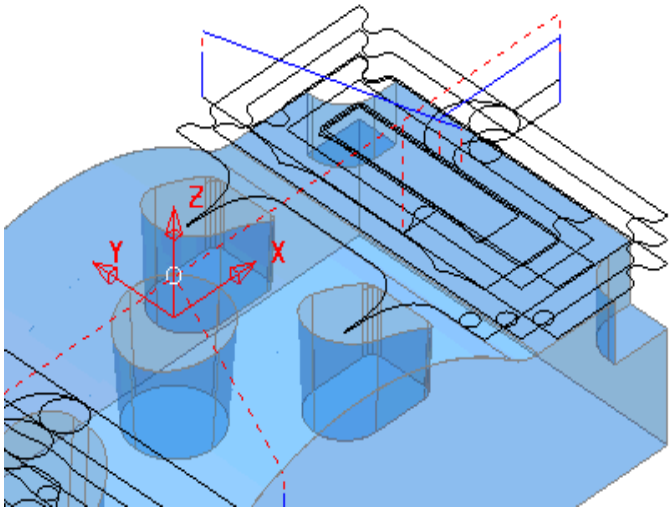

Unsafe Segment removal has been applied to prevent the cutter attempting to plunge into and machine confined areas (Pockets).

However, there are a couple of undesirable spikes on the remaining toolpath. These can be reduced by applying the **High Speed** - **Profile Smoothing** option.

12 In the **PowerMILL** ***explorer***, right-click the toolpath named **AreaFilter** and select **Settings** to open the original **Model Area Clearance** dialog.

13 Click **Create a new toolpath based on this one** button, to create a copy of the toolpath.

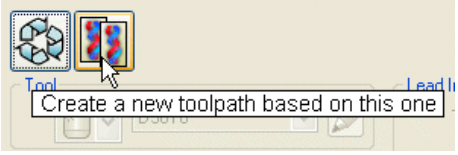

14 **Rename** the copy of the toolpath as **AreaFilter-ProfileSmooth**.

15 In the **Model Area Clearance** dialog, select the **High Speed** page.

16 Select the **Profile Smoothing** option with the **Radius (Tool Diameter Units)** value set to **0.2**

 Copyright © Delcam Ltd

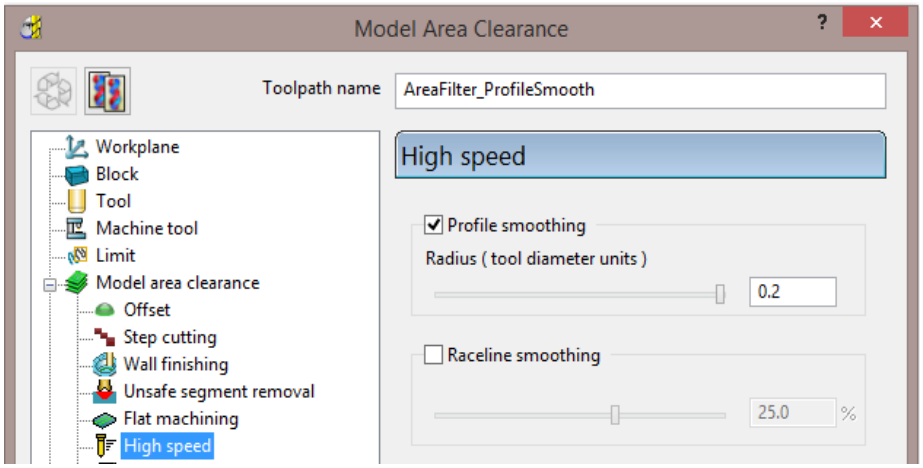

17 **Calculate** the **Model Area Clearance** toolpath and once processing is complete, close the dialog.

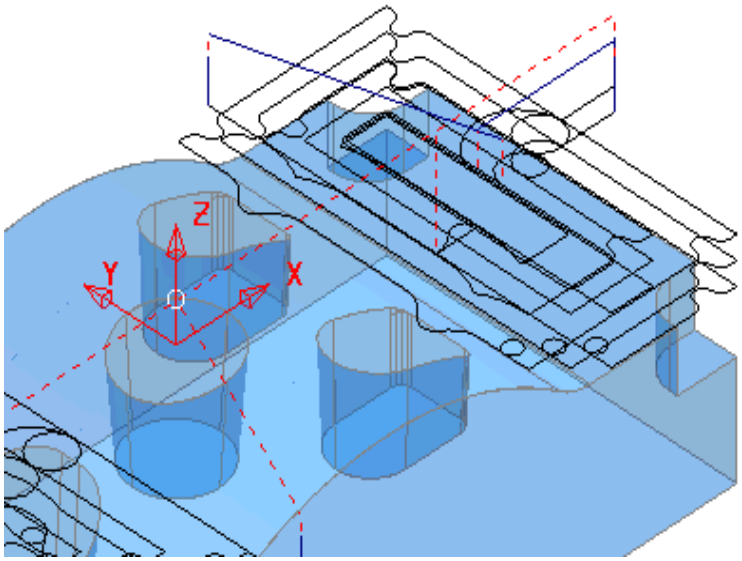

The internal, sharp corners around the toolpath outer profile are now smoothed.

18 From the **Main** pull down menus, select **File** > **Save Project** to update the stored data (**.....\COURSEWORK\PowerMILL-Projects\MountingBlock**).

19 From the **Main** pull down menus select **File** > **Delete All**.

20 From the **Main** pull down menus select **Tools** > **Reset Forms**.

Model Rest Area Clearance example

It is generally good practice to use as larger diameter tool as possible for the initial **Area Clearance** operation. This ensures that the maximum amount of material is removed as quickly as possible. However, the large diameter tool may not have full access to certain internal corners or pockets within the component. As a result, these areas will require further roughing out with one or more, smaller diameter tools before running the **Finishing** strategies.

In the **Model Rest Area Clearance** options, a smaller **Tool** is referenced either to an existing **Toolpath** or a **Stock Model**, such that tool tracks will only be produced locally within the remaining material (stock).

1 **Import** the **model**:

.....\PowerMILL_Data\models\WingMirrorDie.dgk

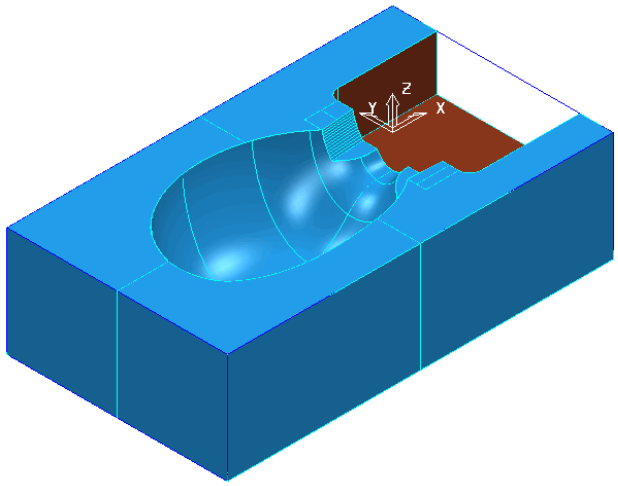

2 **Save Project** as:

.....\COURSEWORK\PowerMILL-Projects\WingMirrorDie-Ex1

3 Create a **Tip Radiused** tool of ***Dia* 40 *tiprad* 6** and Name **D40TR6**.

4 From the **Main** toolbar open the **Block** dialog and **Calculate** using the default settings, ***Defined by*** - **Box** to and ***Type*** - **Model**.

5 Using the default settings, select **Calculate** in the **Rapid Move Heights**.

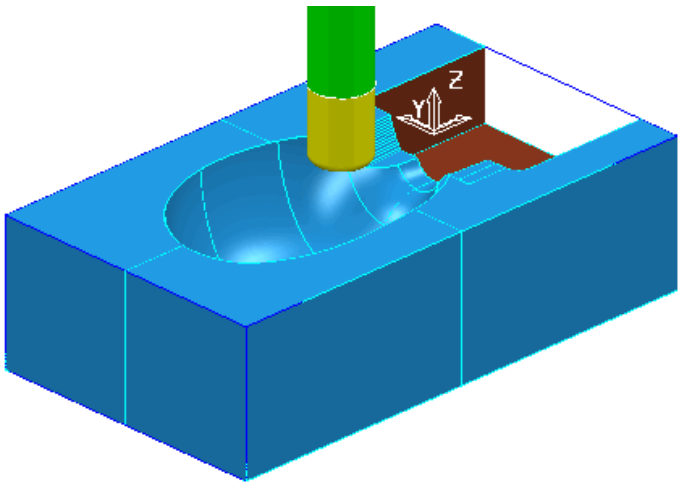

 Copyright © Delcam Ltd

6 Select **Toolpath Strategies** , and from **3D Area Clearance** open a **Model Area Clearance** strategy.

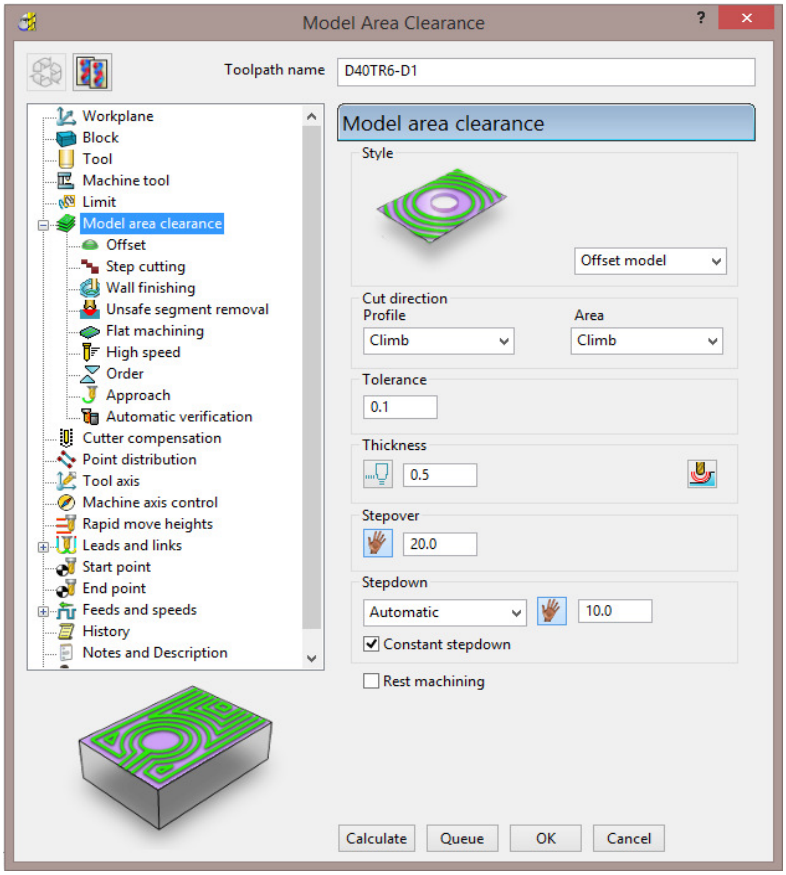

7 In the **Model Area Clearance** strategy dialog:

- a Enter **Toolpath name** - **D40TR6-D1**
- b Select **Style** - **Offset Model**
- c Input **Thickness 0.5**
- d Input **Stepover 20**
- e Input **Stepdown 10**

8 In the local ***explorer***, select the **Limits** page, and set the **Block - Limit** to **Limit tool centre to block edge**.

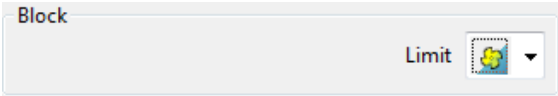

9 In the local ***explorer***, expand the **Leads and Links** options, and then select **Lead In**.

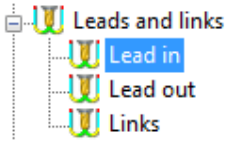

10 In the **Lead in** window, select **1st Choice** - **Ramp** - 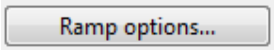

11 Input the following **Ramp Options**:

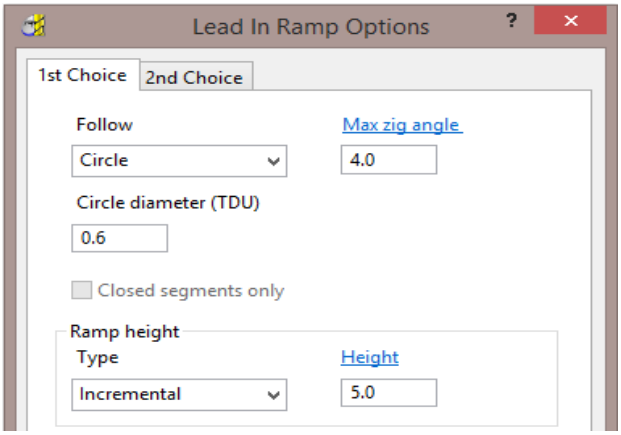

12 Click **Calculate** to process the **Model Area Clearance** toolpath.

13 Select an **ISO 2** view.

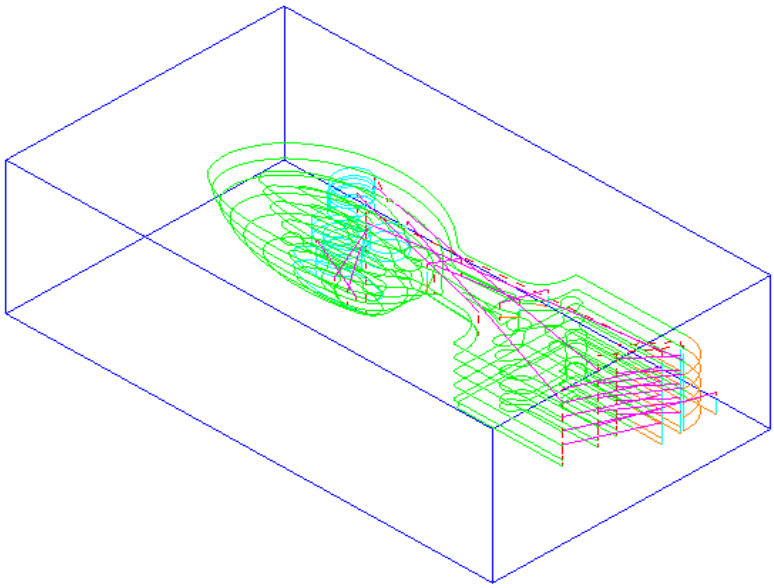

The **Offset Model** - **Area Clearance** strategy follows the model contours while gradually offsetting into the remaining material at each Z Height.

14 Right-click the toolpath and select **Simulate from Start** to display the **Simulation** toolbar.

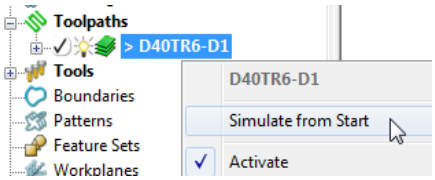

 Copyright © Delcam Ltd

15 Ensure that the **ViewMILL** toolbar is also active.

16 Switch the **ViewMILL On/Suspend** setting to a green sphere , and then select the ***shiny*** shaded image icon .

17 Press the **Play** button to start the simulation.

Undrawing the tool will speed up the simulation. You can control the display of the tool by left clicking on the tool entity, light bulb in explorer.

The finished result indicates that in some areas of the model there is still too much material for the finishing strategies to cope with.

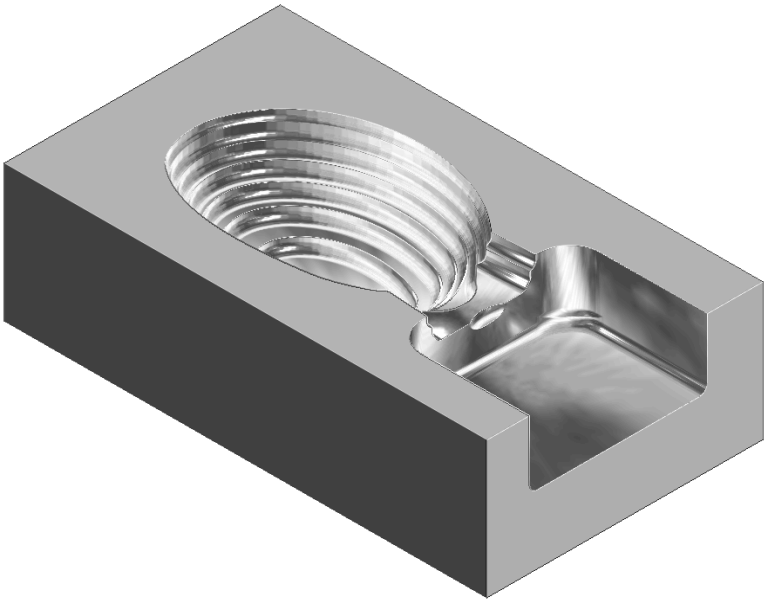

As a result, a further area clearance strategy is required using a smaller tool to continue locally into the remaining areas. This technique is known as **Rest** machining.

18 Click to suspend **ViewMILL**.

19 Click to return to the **PowerMILL** window.

Rest Roughing using a Reference Toolpath

1 Create a **Tip Radiused** tool of Diameter **16**, Tip Radius **3** and name it as **D16TR3**.

2 Select **Toolpath Strategies** , and from **3D Area Clearance** open a **Model Rest Area Clearance** strategy.

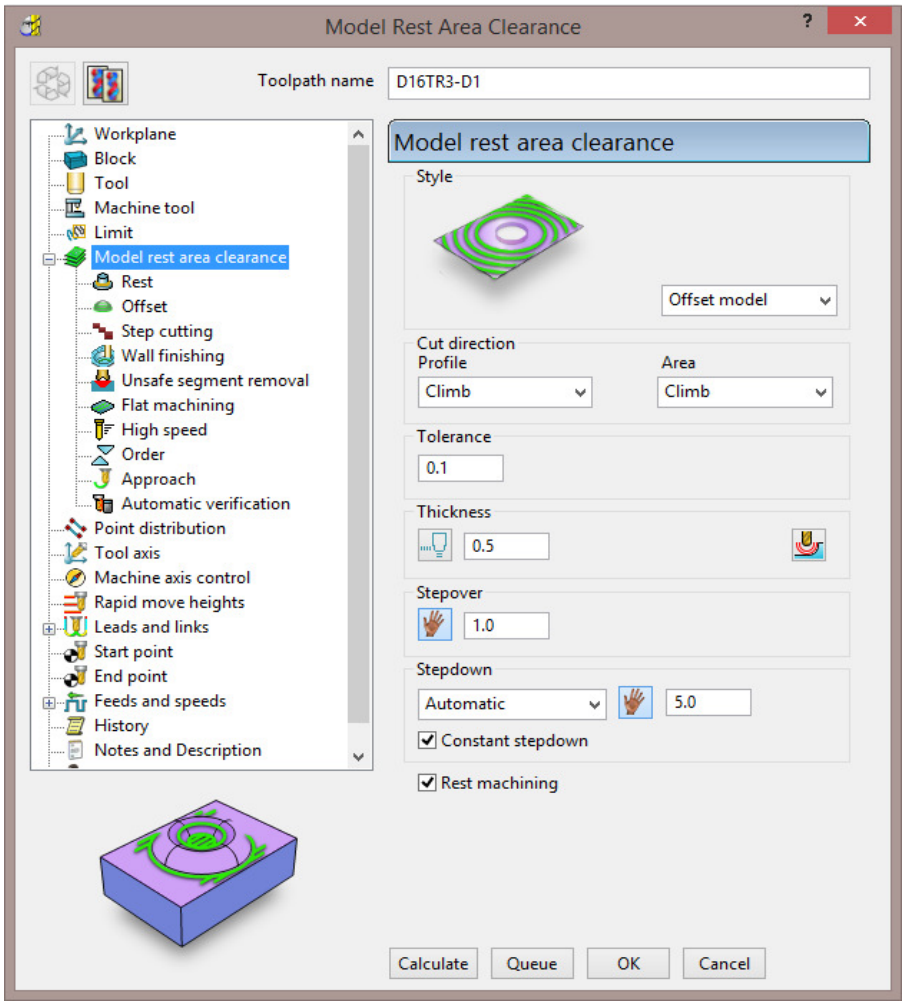

By directly selecting **Model Rest Area Clearance**, the **Rest machining** options and the most suitable style, **Offset Model** will already be active in dialog.

a Enter a new ***Toolpath name*** **D16TR3-D1**

b Keep the **Thickness** as **0.5**

c Enter **Stepover** as **1**

d Enter **Stepdown** as **5**

e Select the **Rest** page from the strategy **explorer**.

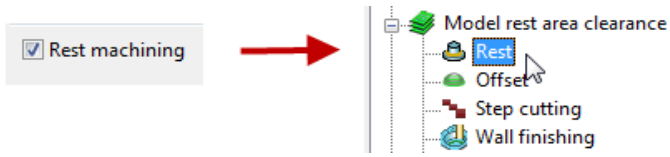

 Copyright © Delcam Ltd

f Set the **Rest machining** type as **Toolpath**, enter **D40TR6-D1** as the reference toolpath, and input ***Detect material thicker than*** as **0.6**

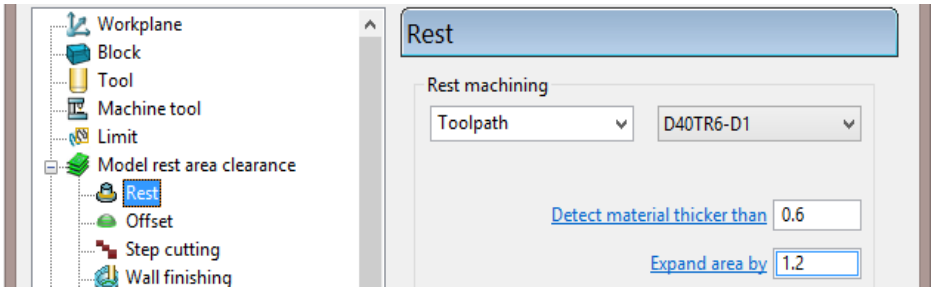

g In the local ***explorer***, select **Unsafe segment removal** page and if set, ***un-tick*** the **Remove segments smaller than threshold** option.

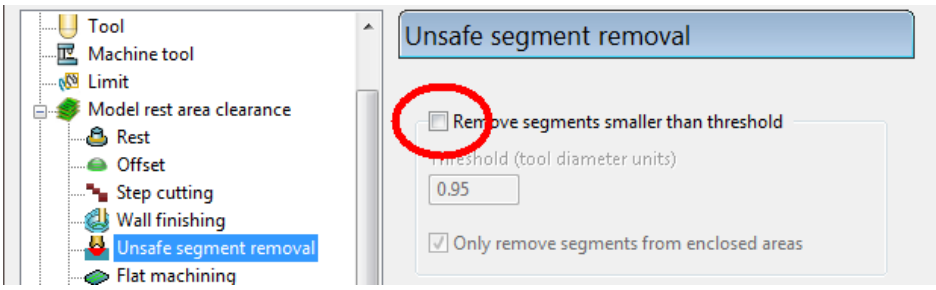

h **Activate** the **D16TR3** tool to be used in the new toolpath.

3 Click **Calculate** to process and create the additional **Offset Model - Area Clearance** toolpath and then **Close** the dialog.

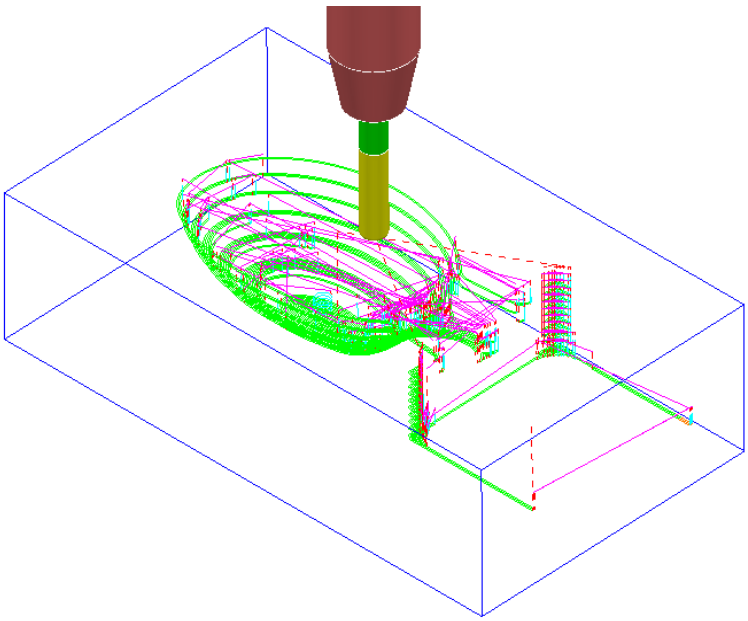

4 From the **Main** pull down menus select **File - Save Project** to update:

.....\COURSEWORK\PowerMILL-Projects\Wing_Mirror_Die

5 Switch the **ViewMILL On/Suspend** button to a green sphere .

6 Select the **Rainbow Shaded Image** .

7 Right mouse click on the toolpath **D16TR3-D1** and select **Simulate from Start**.

8 Press the **Play** button to start the simulation.

The **ViewMILL** simulation shows this toolpath shaded in a different colour where it has machined in areas the previous toolpath did not cover.

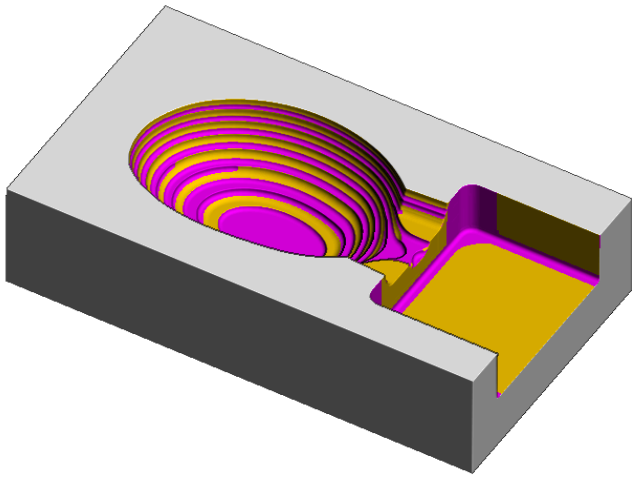

The ***Reference* toolpath** has successfully accessed material closer to the component form.

This will reduce the risk of excessive wear or damage to tools used for the subsequent finishing operations.

9 Click the **ViewMILL On/Suspend** button to a red sphere and then click to return to the **PowerMILL** window.

Rest Machining using a Stock Model

An alternative method for rest roughing is the use of a **Stock Model** instead of a ***Reference* toolpath**.

The benefits of using a **Stock Model** compared to a reference toolpath are:

- The remaining surplus material can be visualised and registered along with the associated toolpaths.
- A **rest** machining strategy referenced to a **Stock Model** will include the effect of all previous **toolpaths** currently registered to that **Stock Model**.
- A **toolpath** that was created to a different **workplane** (for example, multi-axis) can be referenced to a **Stock Model**.

*It is not possible to apply a **rest** machining strategy referenced to a **toolpath** that was created to a different **workplane**.*

 Copyright © Delcam Ltd

In this example a **Stock Model** is created to initially include the **D40TR6-D1** toolpath. Then, a copy of the toolpath, **D16TR3-D1** is created using the **Stock Model** for the ***rest machining*** reference.

1 In the **PowerMILL *explorer***, **Activate** the toolpath **D40TR6-D1**.

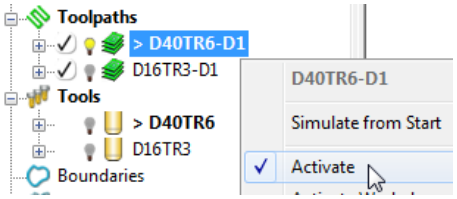

2 In the **PowerMILL *explorer***, right-click **Stock Models** and select **Create Stock Model**.

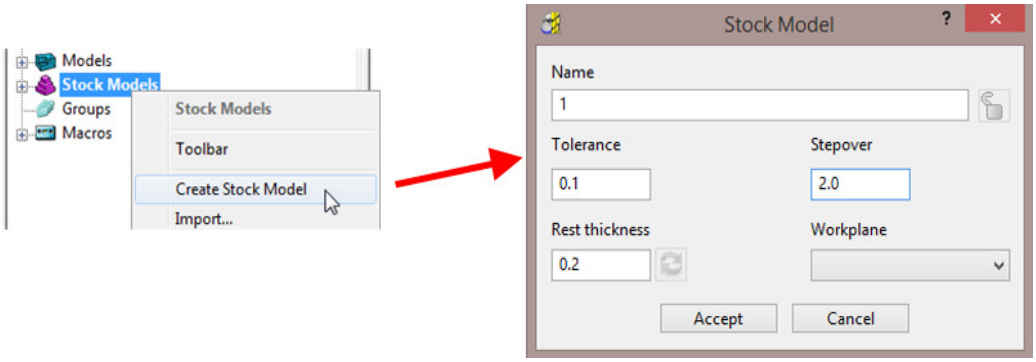

3 **Accept** the above default values for the ***triangle mesh*** creation.

4 In the **PowerMILL *explorer***, right-click the newly created **Stock Model 1** and select **Apply** > **Active Toolpath First**.

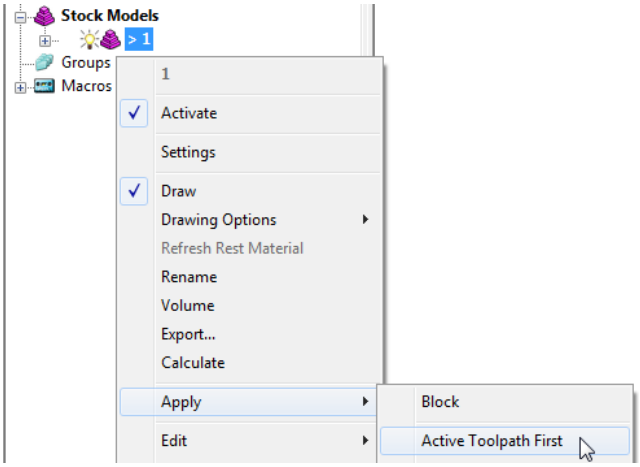

Both the currently active **Toolpath** and **Block** are added to **Stock Model**.

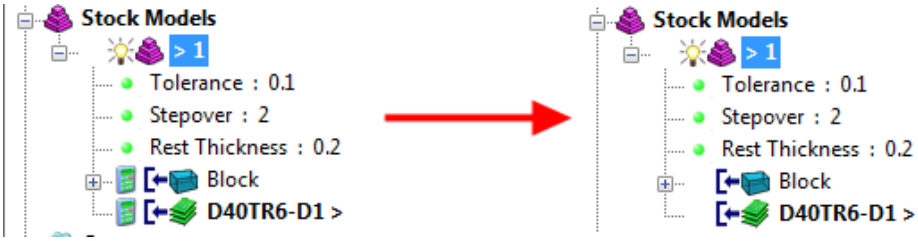

5 From the same menu, select **Calculate** to physically update the **Stock Model**.

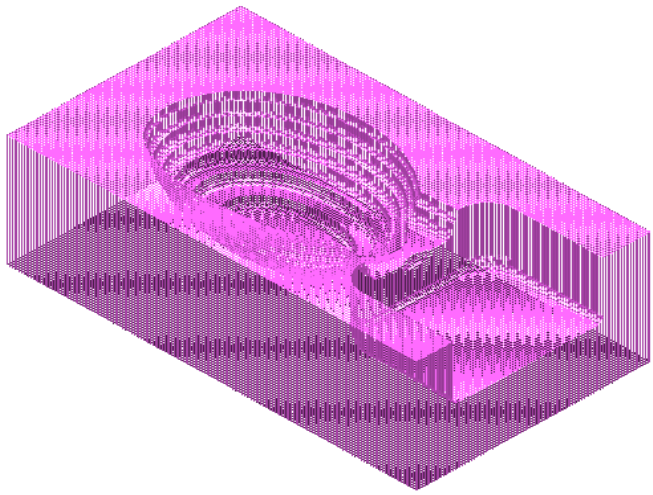

A triangular mesh will appear representing the state of the material after the effect of the first machining strategy, **D40TR6-D1**.

In the next two actions, The **Stock Model** will be changed to:-

a Visually remove the component form (**Show Rest Material**).

b Visually change the style from triangle mesh to a shaded form (**Shaded**).

6 From the same menu, select **Drawing Options** > **Show Rest Material**.

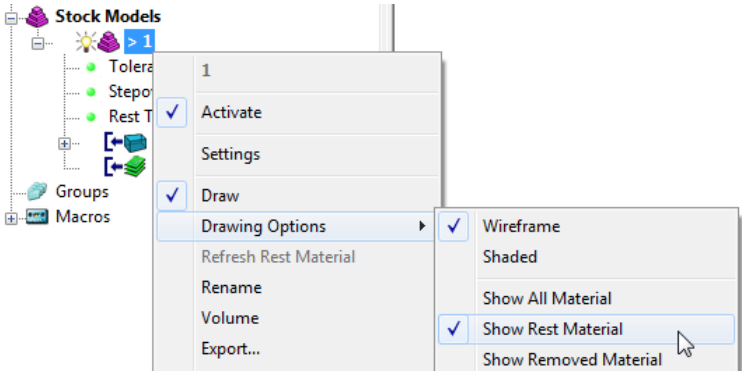

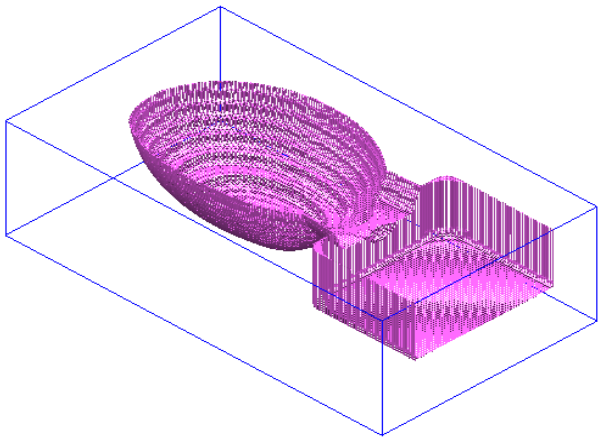

7 From the same menu, select **Drawing Options** > **Shaded** to display the shaded view of the **Stock Model**.

 Copyright © Delcam Ltd

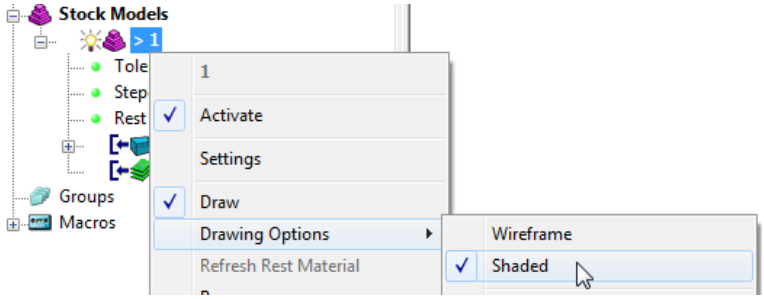

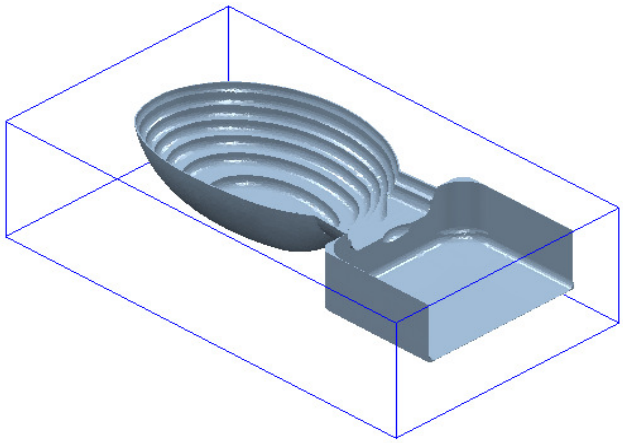

8 In the **PowerMILL *explorer***, **Activate** the toolpath **D16TR3_D1**.

9 Right-click on the toolpath **D16TR3_D1** and select **Settings** to open the **Model Rest Area Clearance** strategy dialog.

10 Click to create a copy of the toolpath.

11 Select the **Rest** page and modify the settings as below using **Stock model 1**.

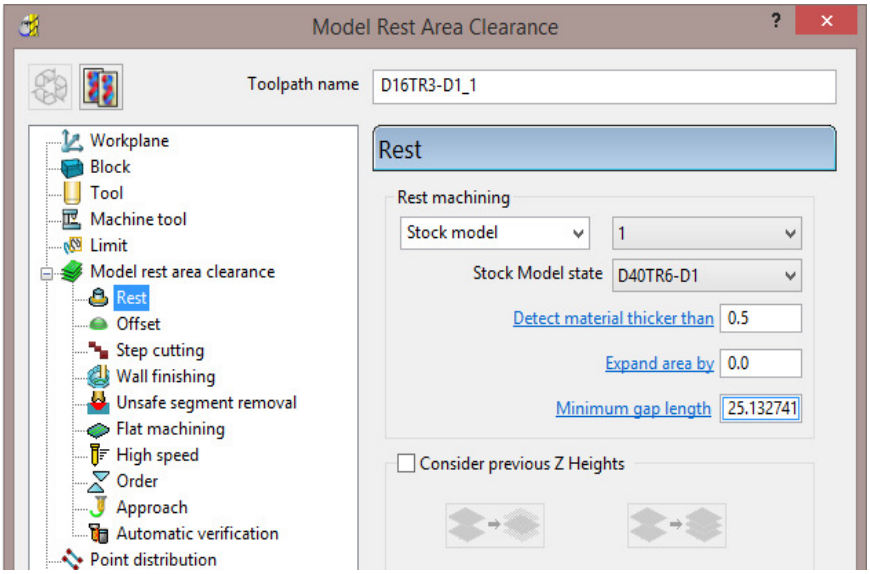

12 Click **Calculate** to create an alternative and more efficient **Rest Machining** toolpath named **D16TR3-D1_1**.

13 **Close** the machining strategy dialog.

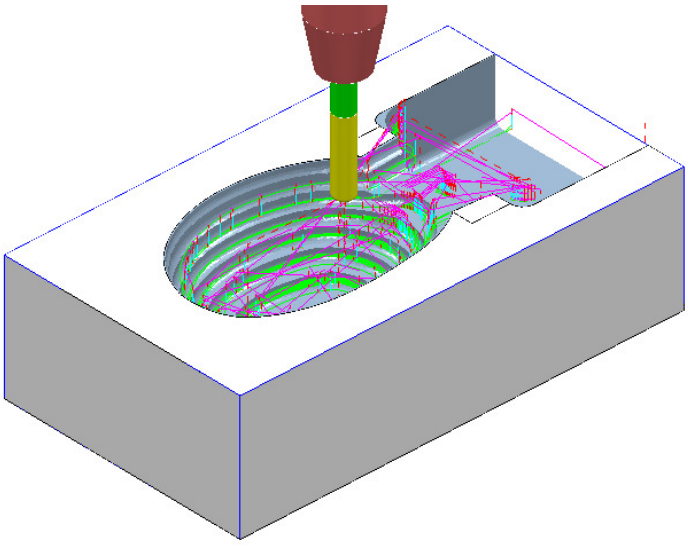

Although the toolpath **D16TR-D1_1** appears (coloured purple) as a referenced entity in the **Stock Model** list, the resultant machining effect is not included.

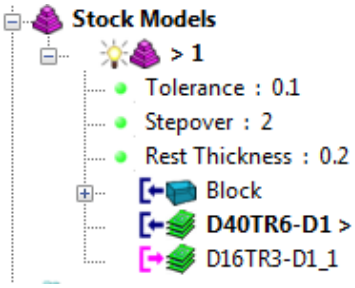

14 In the **PowerMILL *explorer***, right-click the toolpath, **D16TR3-D1_1** and select **Add to** > **Stock Model**.

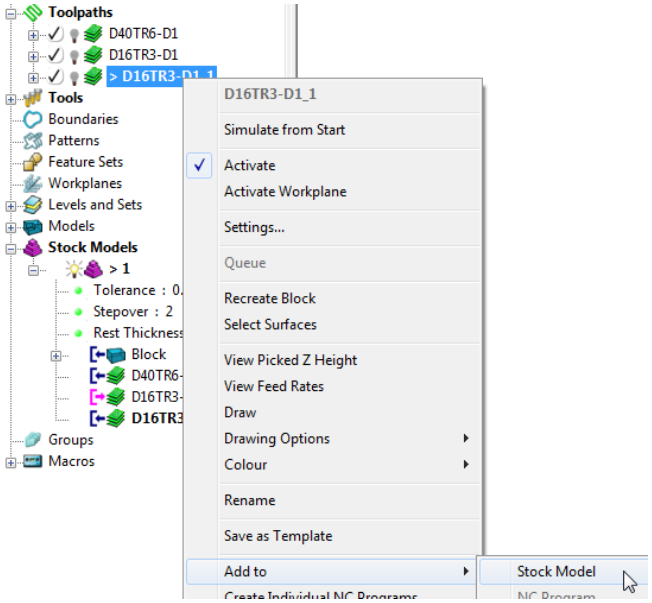

*At this stage, the **Stock Model** will disappear from the screen.*

 Copyright © Delcam Ltd

15 Right-click the active **Stock Model** and select **Calculate** to update it.

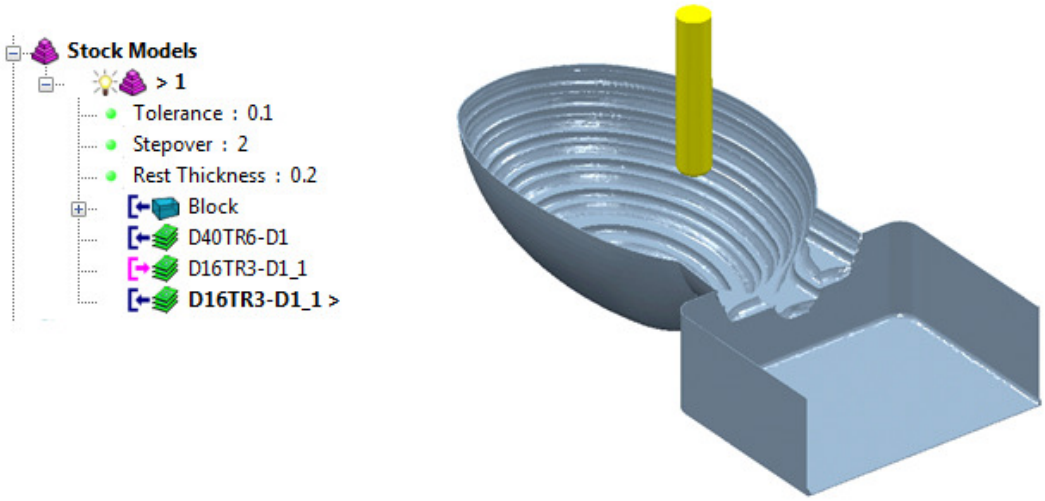

16 From the **Main** pull down menus, select **File** > **Save Project** to update:

.....\COURSEWORK\PowerMILL-Projects\WingMirrorDie

17 From the **Main** pull down menus select **File** > **Delete All**.

18 From the **Main** pull down menus select **Tools** > **Reset Forms**.

Exercise

Area clearance with both unsafe segment removal and rest roughing

1 **Import** the **Model**:

.....\PowerMILL_Data\Models\Cowling.dgk

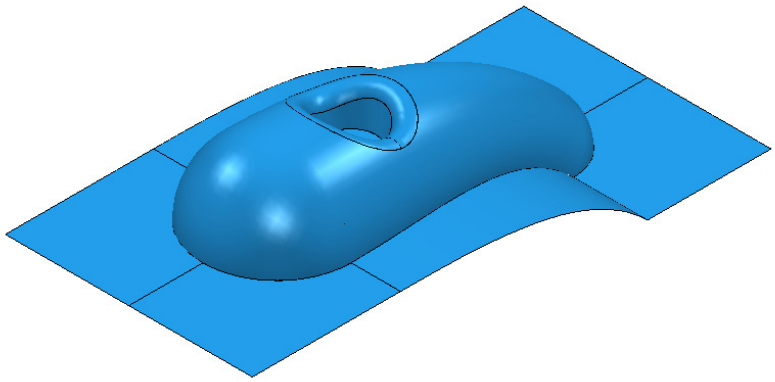

2 Select an **ISO 1** view.

Machining setup

3 Create the following tools:

- **Tip Radiused** tool – ***Name*** **D16TR3**, Diameter **16** Tip Radius **3**
- **Tip Radiused** tool – ***Name*** **D12TR1**, Diameter **12** Tip Radius **1**

4 Create a **Workplane** centrally position at the ***top centre*** of the **Model**, and then **Activate** it.

5 **Calculate** a **Block** using ***Defined by*** – **Box** and **Type** – **Model**, then change the **Min Z** value to **-80** and lock it by selecting the adjacent **padlock**.

6 **Calculate** the **Rapid Move Heights** using the default settings.

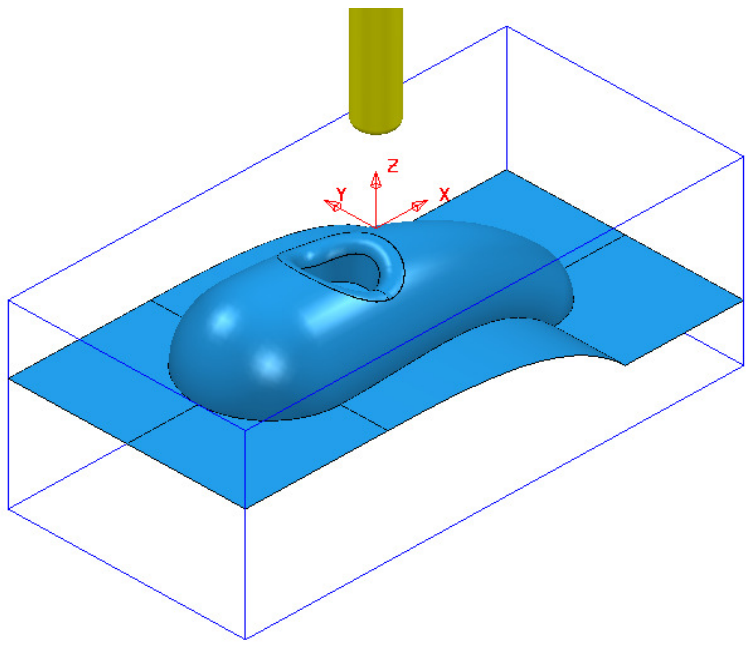

Area Clearance Strategies

1 Create a **Model Area Clearance** strategy named **D16TR3-RGH1** using:

a The **D16TR3** tool.

b The ***Style*** as **Offset All**.

c A ***Thickness*** of **0.5**

d ***Stepover*** **8** and ***Stepdown*** **12**

e In the **Flat Machining** page use **Level**.

f Select the **Unsafe segment removal** page.

g ***Tick*** the box ***Remove segments smaller than threshold*** and leave the other settings as default.

 Copyright © Delcam Ltd

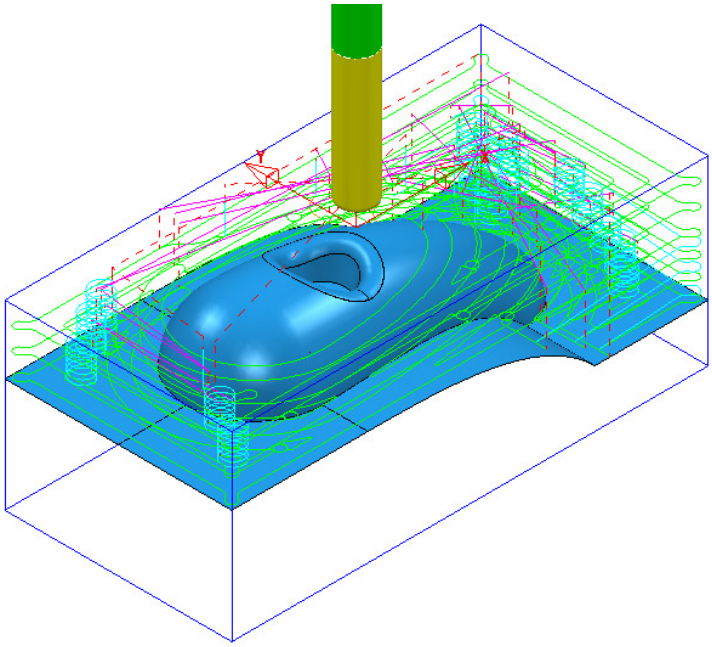

2 Create another **Model Area Clearance** strategy named **D12TR1-RGH1** using:

a The **D12TR1** tool.

b The ***Style*** as **Offset Model**.

c Stepover **2** and Stepdown **3**

d In the **Flat Machining** page use **Area**.

e Enable the **Rest machining** page and reference to the previous toolpath.

f Disable the **Unsafe segment removal** option.

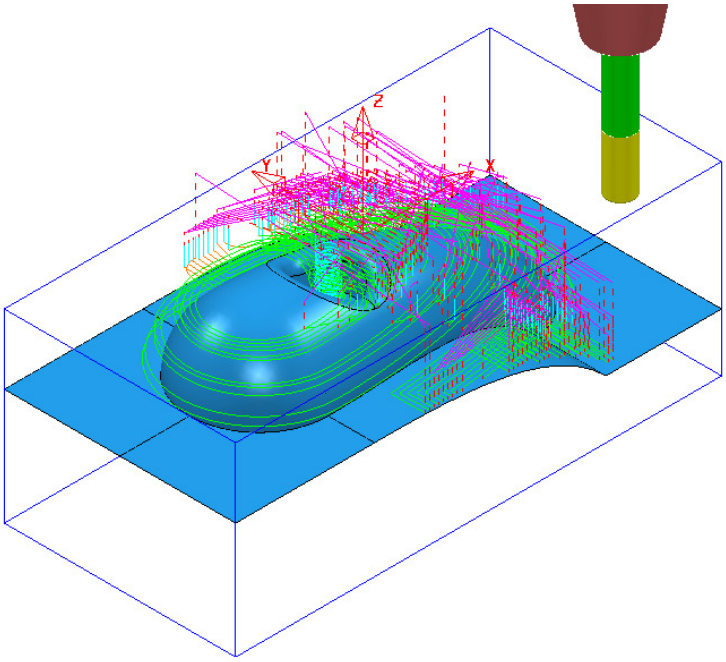

3 **Save Project As**:

.....\COURSEWORK\PowerMILL_Projects\ModelAreaClear-Exercise

ViewMILL Simulation

4 Perform a **ViewMILL** simulation with the **Rainbow Shaded Image** option active on both of the **Model Area Clearance** toolpaths.

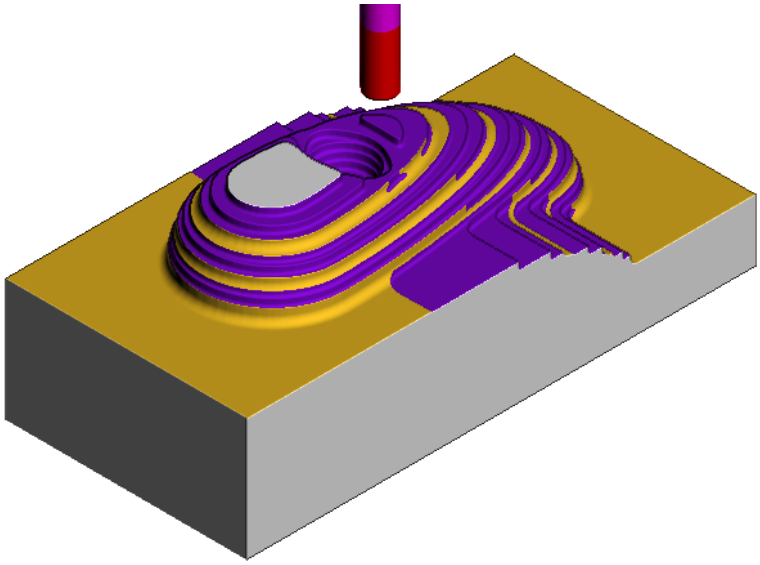

5 Select **Exit ViewMILL** to close the current session.

*Do not close the **Project** as it will be continued in the following section.*

Area Clearance using the Step option

If a large stepdown is used in the **Area Clearance** strategies then the bulk of the waste material will be removed as quickly as possible. This will inevitably leave large steps on the remaining stock that would normally be reduced using a separate **rest** roughing operation. However, if it is acceptable to use the same **Tool** then the **Step** option will provide rest machining within the same **Area Clearance** strategy. In this case additional passes are applied (where required) that step upwards between the original **Z Heights**.

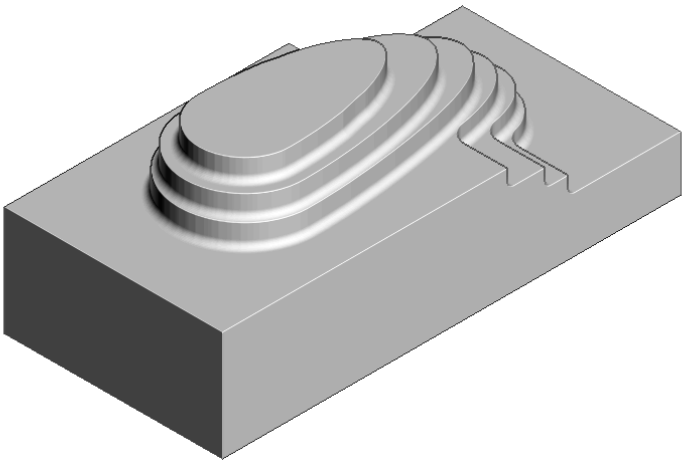

 Copyright © Delcam Ltd

1 **Activate** the existing toolpath **D16TR3-RGH1** to restore the settings used.

2 Run a new **ViewMILL** simulation (as shown above) on the toolpath **D16TR3-RGH1**.

3 Select **Exit ViewMILL** to close the current session.

4 Right mouse click on the active toolpath **D16TR3-RGH1** and from the local menu select **Settings**.

5 Select the 'Make a Copy' of the toolpath option .

6 **Rename** the new toolpath as **D16TR3_Step-RGH1**

7 In the main page of the dialog change the ***Style*** to **Offset model**.

8 In the **Model Area Clearance**, local ***explorer***, select **Step cutting**.

9 ***Tick*** the **Step cutting** box and enter values exactly as shown below.

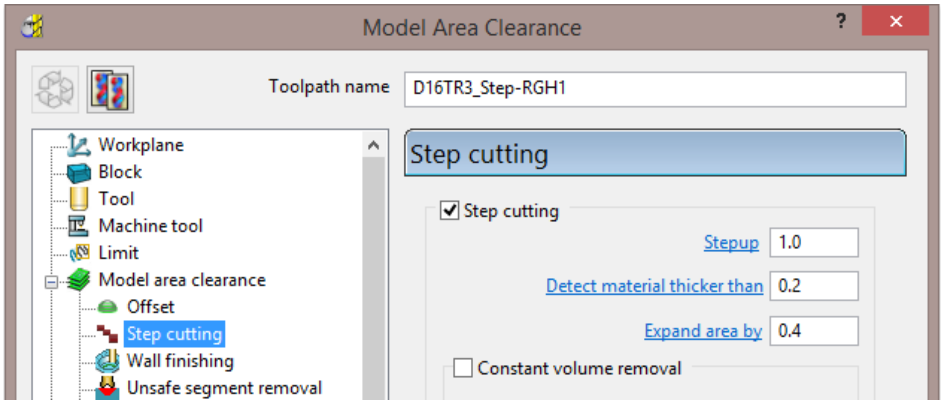

10 Select **Calculate** to create the toolpath **D16TR3_Step-RGH1**.

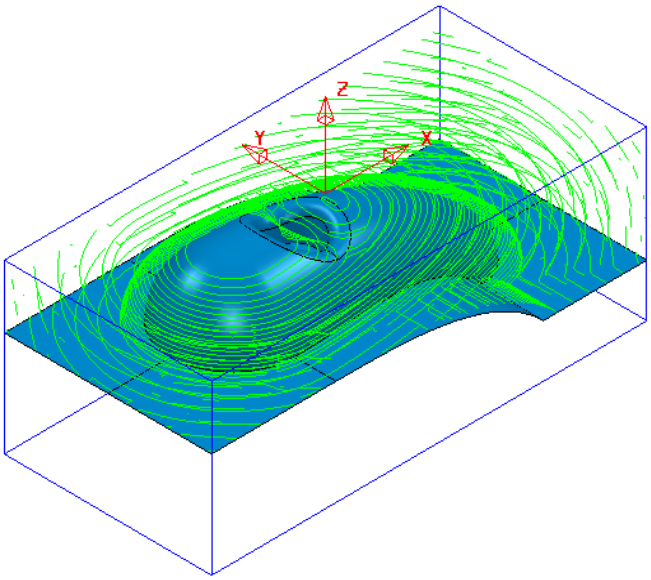

11 Run a new **ViewMILL** simulation on the toolpath **D16TR3_Step-RGH1**.

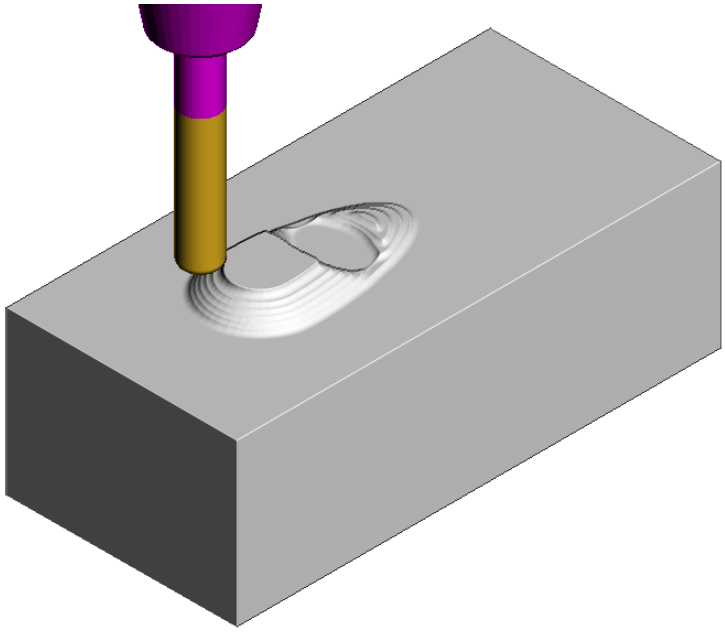

The above image shows the effect of the **Step cutting** option tracking upwards from the first slice to get closer to the model form.

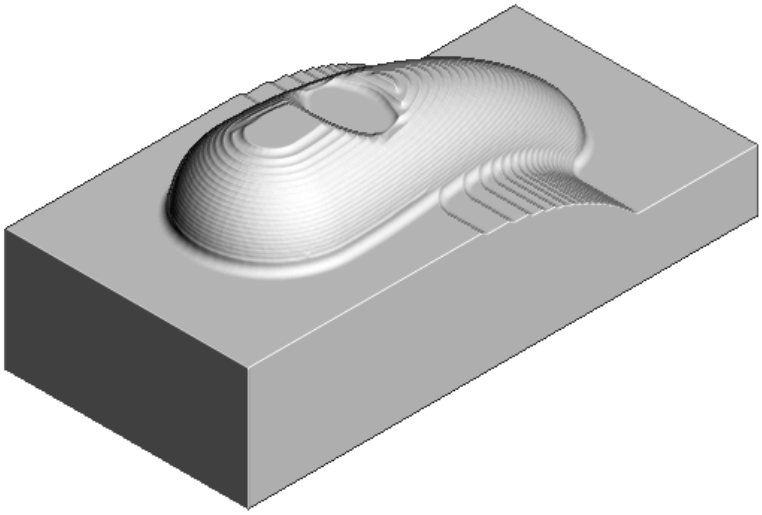

The Component has been 'Roughed Out' with maximum efficiency, close to the final shape within the same strategy.

12 **Save** the **Project**.

13 From the **Main** pull down menus select **File** > **Delete All**.

14 From the **Main** pull down menus select **Tools** > **Reset Forms**.

 Copyright © Delcam Ltd

Model Area Clearance – Vortex example

Vortex machining is an ***area clearance*** strategy which rapidly removes material from a 3D part while controlling tool load. **Vortex** is best suited to solid carbide tools and is frequently used in combination with **step** cutting.

The engagement angle never exceeds that produced by a straight line cut with a given ***stepover***. This eliminates excessive tool load and all full-width cuts. This enables you to increase feed rates. As the tool approaches the maximum engagement angle, the strategy automatically changes to use a trochoidal path to avoid tool overload.

1 **Open** the (read-only) **Project**:-

……\PowerMILL_Data\Projects\Vortex2-Start

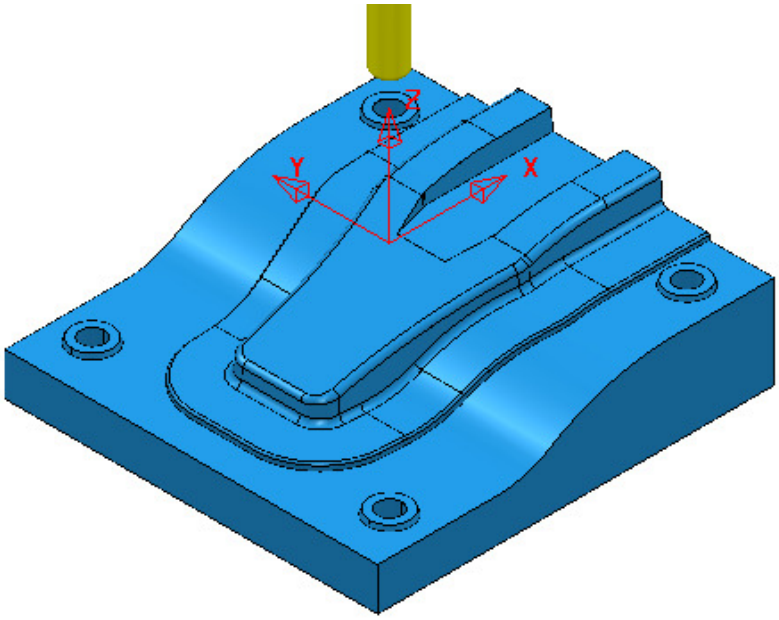

2 **Save Project As**:-

……\COURSEWORK\PowerMILL_Projects\Vortex2

3 **Activate** the **workplane**, **TopCentre-datum**.

4 From the **main** toolbar select **Block** and using, ***Defined by*** **Box** – ***Type*** **Model** select **Calculate** followed by **accept**.

5 From the **main** toolbar select **Rapid Move Heights** and in the form select **Calculate** followed by **Accept**.

6 Select **Toolpath Strategies**, and from **3D Area Clearance** open a **Model Area Clearance** strategy.

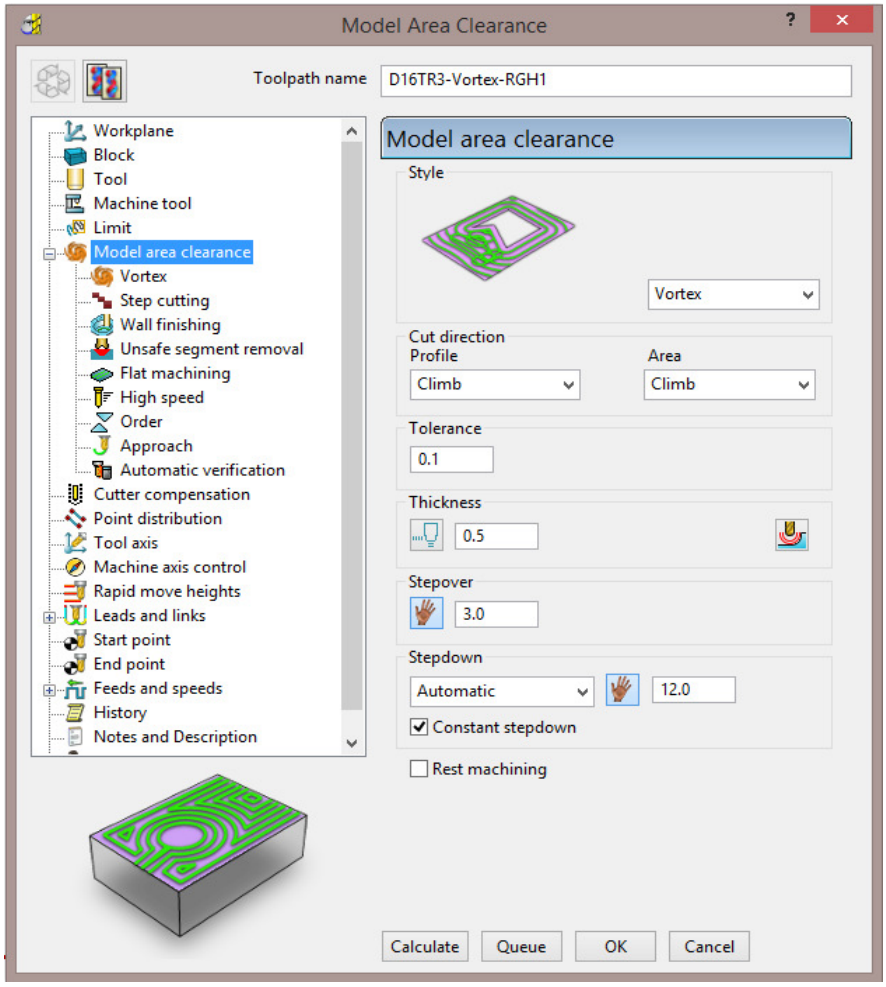

7 In the **Model area clearance** page of the strategy dialog:

- a Enter **Toolpath name** – **D16TR3-Vortex-RGH1**
- b Select **Style** – **Vortex**
- c Set ***Cut direction*** – Both **Profile** and **Area** - **Climb**
- d Input **Thickness 0.5**
- e Input **Stepover 3.0**
- f Input **Stepdown 12.0**

8 Open the **Vortex** page of the strategy dialog:

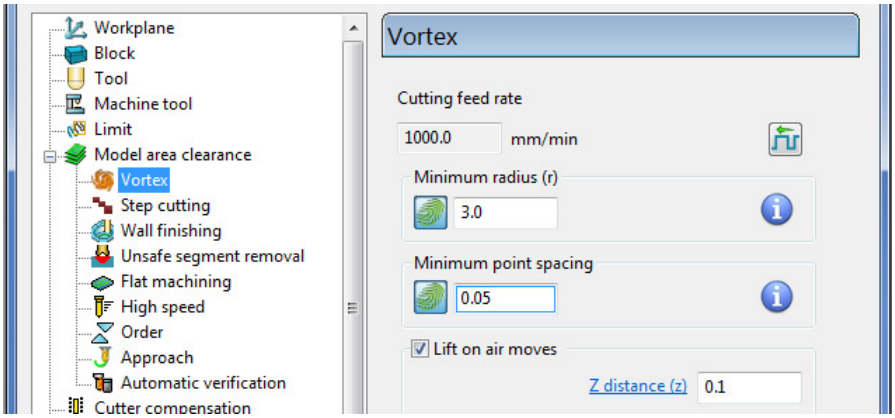

- a Input **Minimum radius (r)** as **3.0**

 Copyright © Delcam Ltd

9 Open the **Step cutting** page of the strategy dialog:

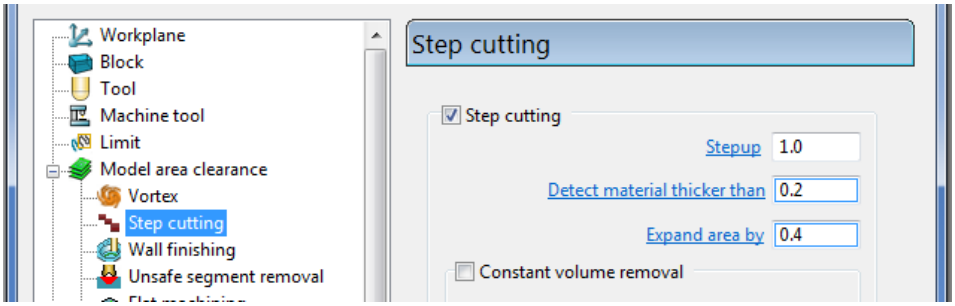

a ***Tick*** the **Step cutting** box and then input a **Stepup** value of **1.0**

10 Open the **Flat machining** page of the strategy dialog:

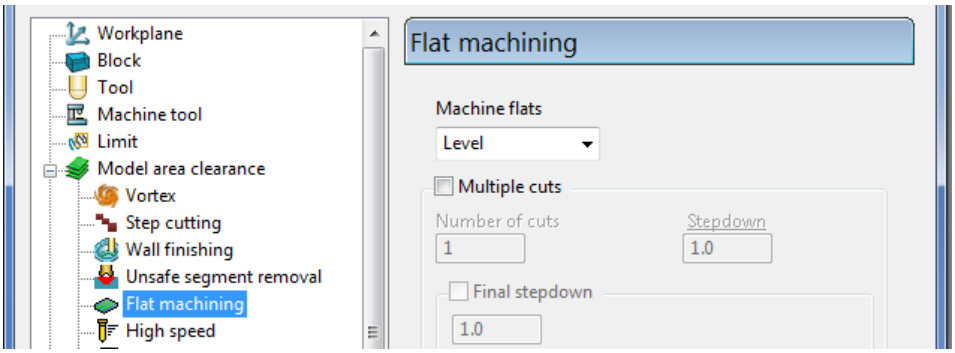

a Set **Machine flats** to **Level**.

11 Open the **Approach** page of the strategy dialog:

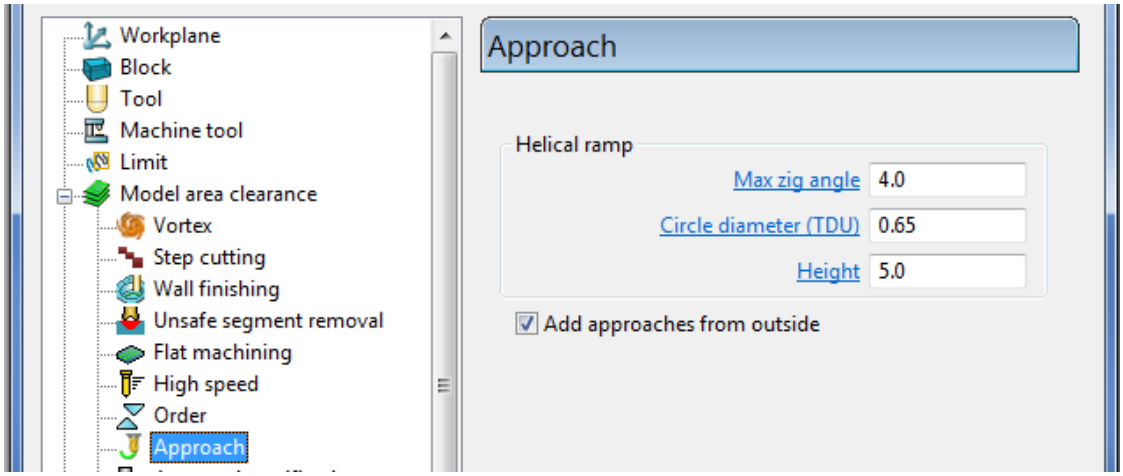

12 In the **Helical ramp** options window, select ***Max zig angle* 4** with a ***Circle diameter* 0.65** and ***Height* 5**.

13 At the bottom of the dialogue select **Calculate** to process the **Vortex** - **Model Area Clearance** toolpath.

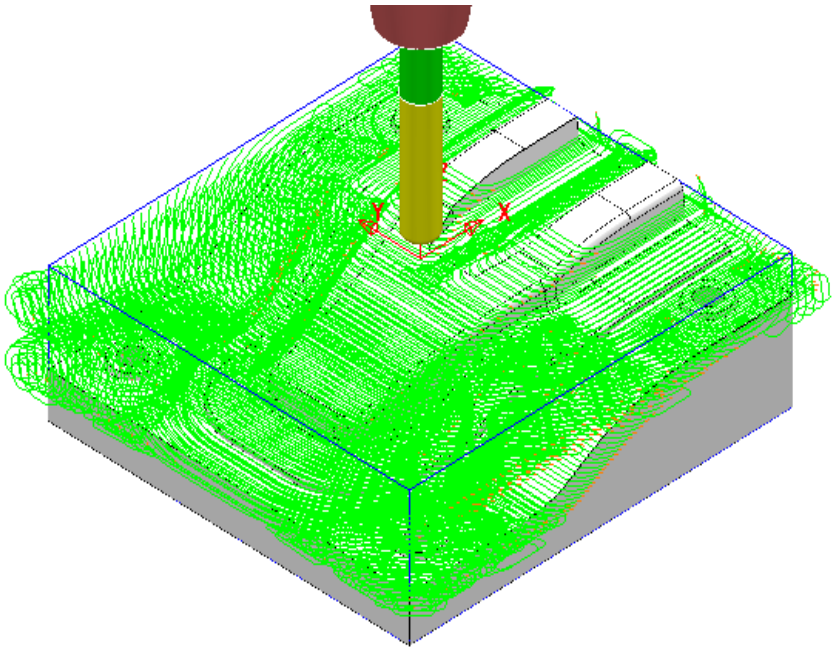

14 Perform a **ViewMILL simulation** on the toolpath to observe the **Vortex** strategy.

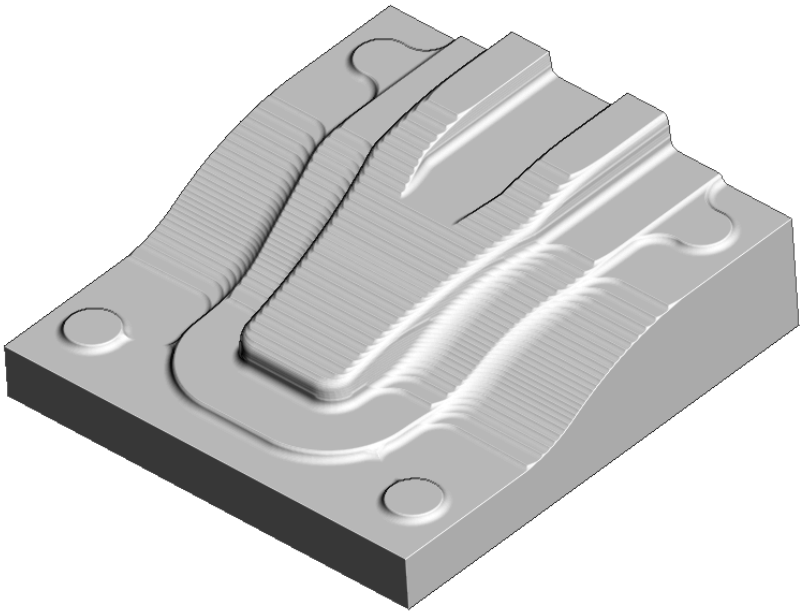

15 **Save** the **Project**.

 Copyright © Delcam Ltd

Machining Flat features within Model Area Clearance

The **Model Area Clearance** strategies in **PowerMILL** include options to control the way in which flat areas of the component model are machined. These are accessed from the **Machine Flats** page on the dialog.

1 Select **File** - **Delete All** and **Tools** - **Reset Forms**.

2 **Import** the **Model**:

.....\PowerMILL_Data\Models\Flats.dgk

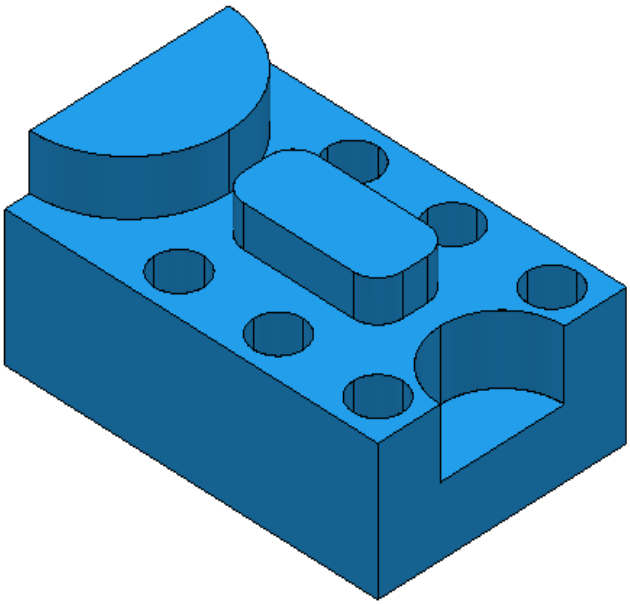

3 Select **File** - **Save Project As**:

.....\COURSEWORK\PowerMILL-Projects\AreaClearFlats

4 Create a 12mm diameter **End Mill** tool named **EM12**.

5 **Calculate** the **Block** using the default settings.

6 **Calculate** default **Rapid Move Heights**.

7 Keep the **Start and End Point** settings as default.

8 Select **Toolpath Strategies** , and from **3D Area Clearance** open a **Model Area Clearance** strategy.

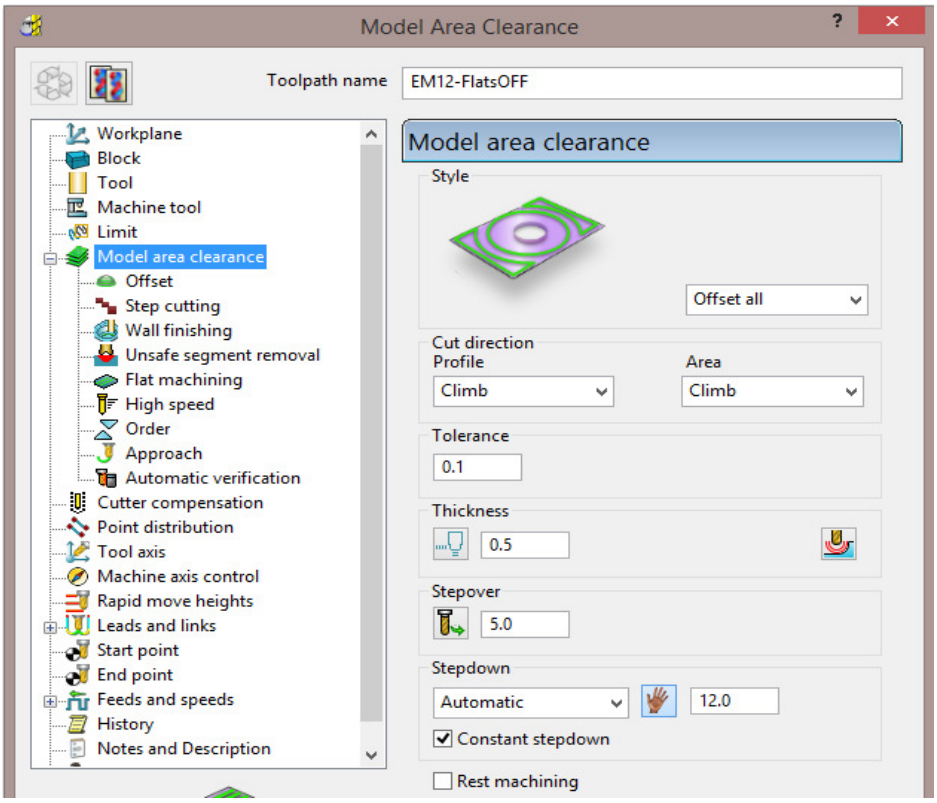

9 In the **Model Area Clearance** strategy dialog:

a Enter the ***Name*** as **EM12-FlatsOFF**.

b Set **Thickness** to **0.5**

c Set **Stepover** to **5**

d Set **Stepdown** to **12**

e Select the **Flat machining** page and set ***Machine flats*** to **Off**.

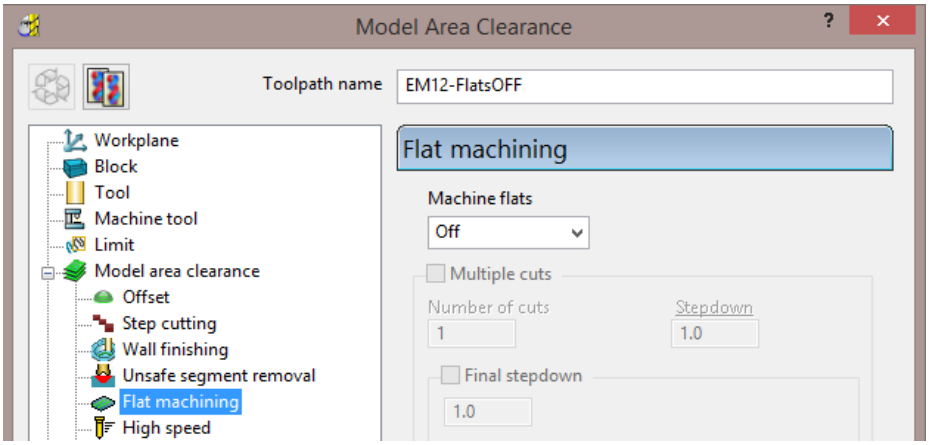

10 Click **Calculate** to process the toolpath and then **Close** the dialog.

 Copyright © Delcam Ltd

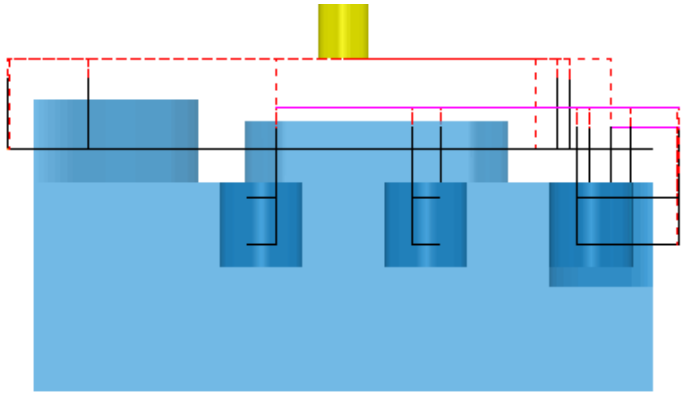

When the **Machine flats** option is set to **Off**, the toolpath totally ignores the flat surfaces of the model. It maintains the defined **Stepdown** value and performs area clearance across the material **Block** at each **Z Height**.

1. Right-click the active toolpath, **EM12-FlatsOFF** and select **Settings**.
2. Click to create a copy of the toolpath.
3. Change the new toolpath name to **EM12-FlatsLEVEL**.
4. On the **Flat machining** page, change ***Machine flats*** to **Level**.
5. **Calculate** to process the toolpath and then **Close** the dialog.

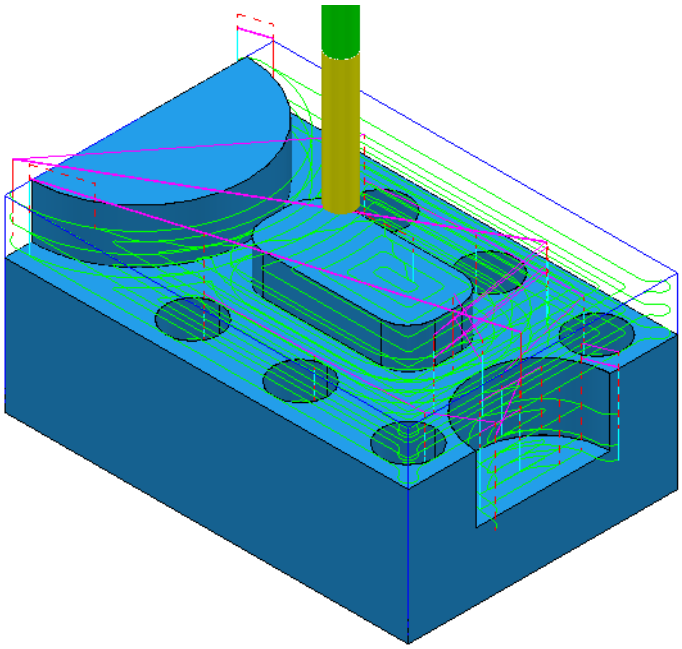

When the **Machine Flats** option is set to **Level**, the toolpath machines the whole **Block** area for each flat area. The **Stepdowns** are reduced as required to be constant between individual flat areas.

6. Right-click the active toolpath and select **Settings**.
7. Click to create a copy of the toolpath.
8. Change the toolpath name to **EM12-FlatsAREA**.

9 On the **Flat machining** page, change ***Machine flats*** to **Area**.

10 **Calculate** to process the toolpath and then **Close** the dialog.

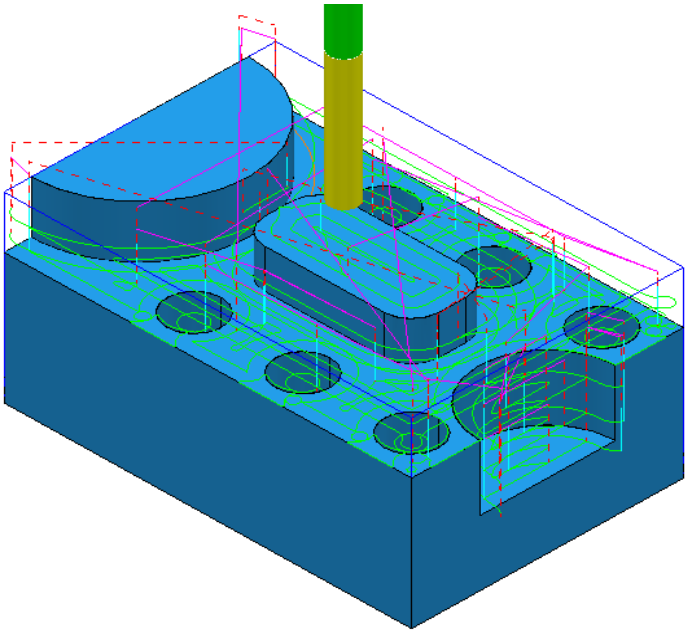

The **Model Area Clearance** toolpath now removes material locally on each individual flat area leaving a total of 0.6mm stock (The **Thickness** plus the **Tolerance**). The nominal stepdown remains constant with flat area machining occurring separately between these levels.

11 Select **File** - **Save Project** to update:-

.....\COURSEWORK\PowerMILL-Projects\AreaClearFlats

Machining Flats separately using Slice Area Clearance

In **PowerMILL Pro** it is possible to use **Slice Area Clearance** to separately machine the flat areas of a model to their exact height. This could be used:

a As a finishing strategy, applied to the flat areas after a **Model Area Clearance** roughing strategy where ***Machine flats*** was set to **Level** or **Area**.

b As a secondary roughing strategy, applied to the flat areas only, that follows on from a **Model Area Clearance** where ***Machine flats*** was set to **Off**.

There are several types of 2D entity that are supported in the **Slices** options:-

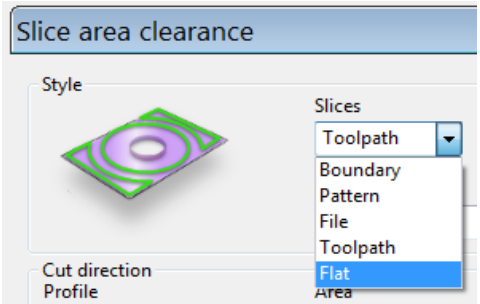

 Copyright © Delcam Ltd

12 Right-click on the **EM12-FlatsArea** toolpath and select **Activate** to reinstate all settings and parameters used.

13 Select **Toolpath Strategies** , and from **3D Area Clearance** open a **Slice Area Clearance** strategy.

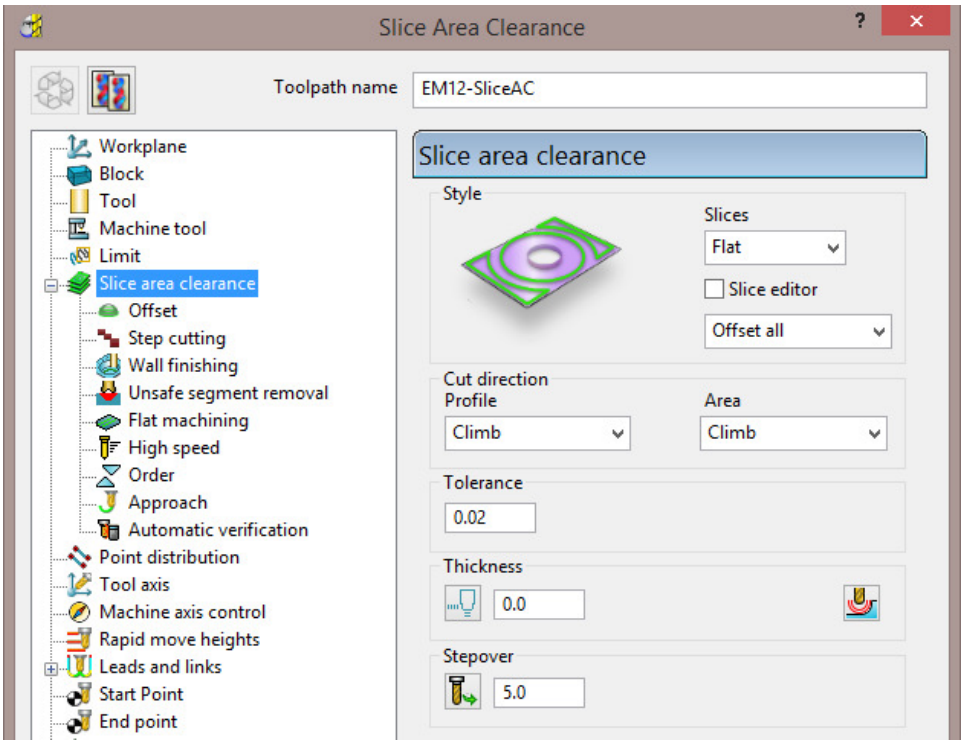

a Enter ***Name*** as **EM12-SliceAC**.

b Set ***Slices*** as **Flat**.

c Set ***Style*** as **Offset all**.

d Set ***Tolerance*** **0.02**

e Set ***Thickness*** **0**

f Set ***Stepover*** **5**

14 Select the **Flat machining** page (Available when ***Slices*** **Flat** is active) and:

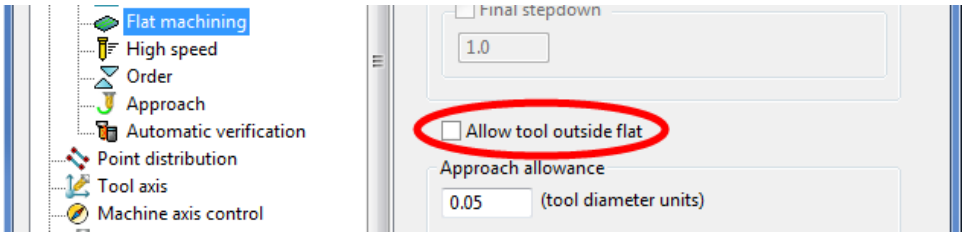

a Check that the **Allow tool outside flat** box is ***unticked***.

15 Select **Calculate** to process the toolpath and then **Close** the dialog.

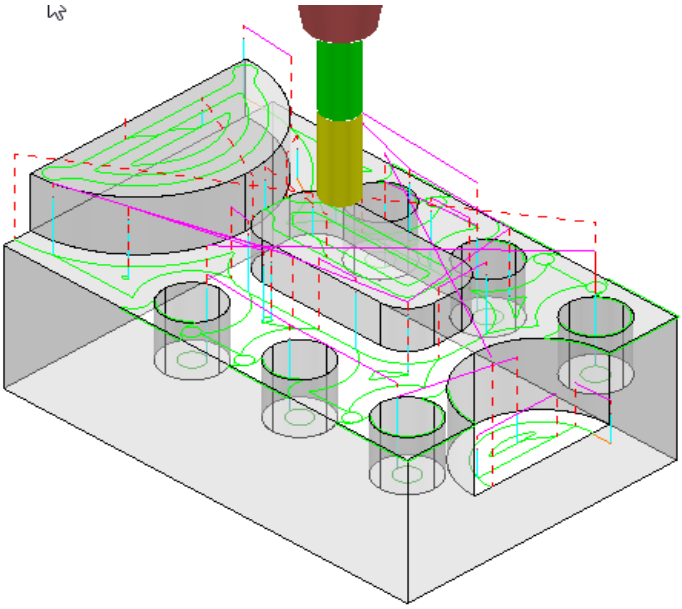

This **Slice Area Clearance** strategy is confined to the **Flat** areas only.

At the moment, the cutter profiles around the edge of the holes located within a flat area. If preferred, the strategy can be changed to **Ignore Holes** (below a specified Diameter) causing the tool to pass straight across them.

16 Right-click on the **Active** toolpath and select **Settings** to re-open the **Slice Area Clearance** dialog.

17 Click on to create a copy of the toolpath.

18 Rename the toolpath as **EM12-SliceAC-IgnoreHoles** and then select the **Flat machining** page.

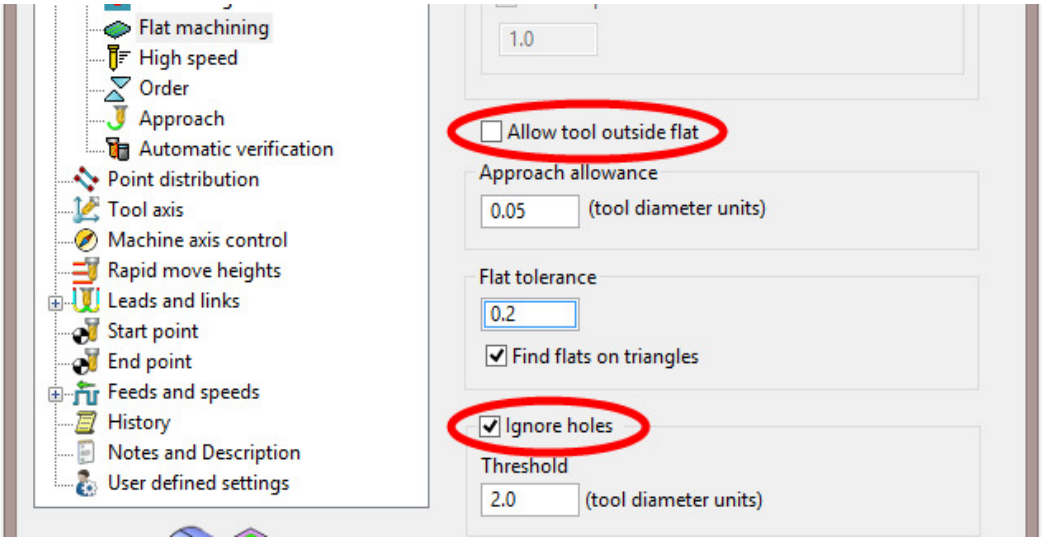

19 Select a ***Tick*** in the **Ignore holes** box.

The **Threshold** (tool diameter units) defines the maximum size of holes to ignore. With the tool **EM12** selected and the **Threshold** set to **2**, holes that are greater than Dia 24mm will not be ignored.

20 Select **Calculate** to process the toolpath and then **Cancel** the dialog.

 Copyright © Delcam Ltd

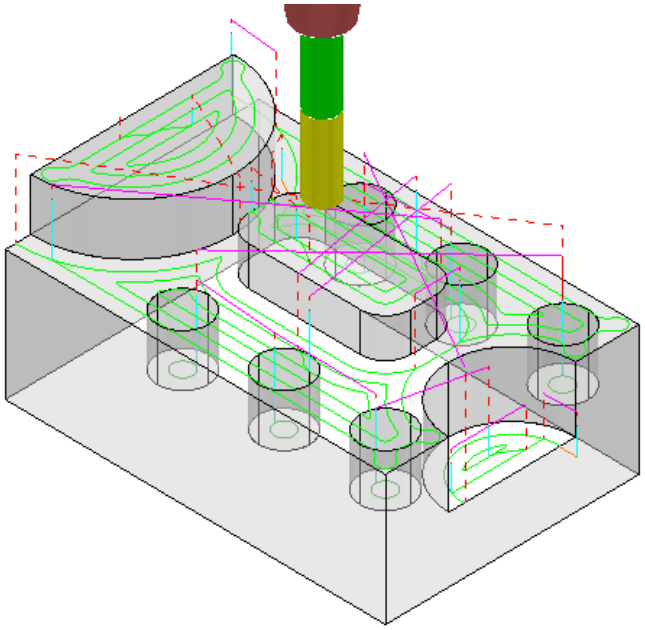

The cutter now passes across the top of the holes without lifting, producing a smoother, more efficient, toolpath.

Ignore Holes *refers to the area defined by the slice definition at the top of the holes. The flat base of any hole will still be machined.*

21 Right-click the **Active** toolpath and select **Settings** to re-open the **Slice Area Clearance** dialog.

22 Click on to create a copy of the toolpath.

23 Rename the toolpath as **EM12-SliceAC-MultipleCuts** and then select the **Flat** machining page.

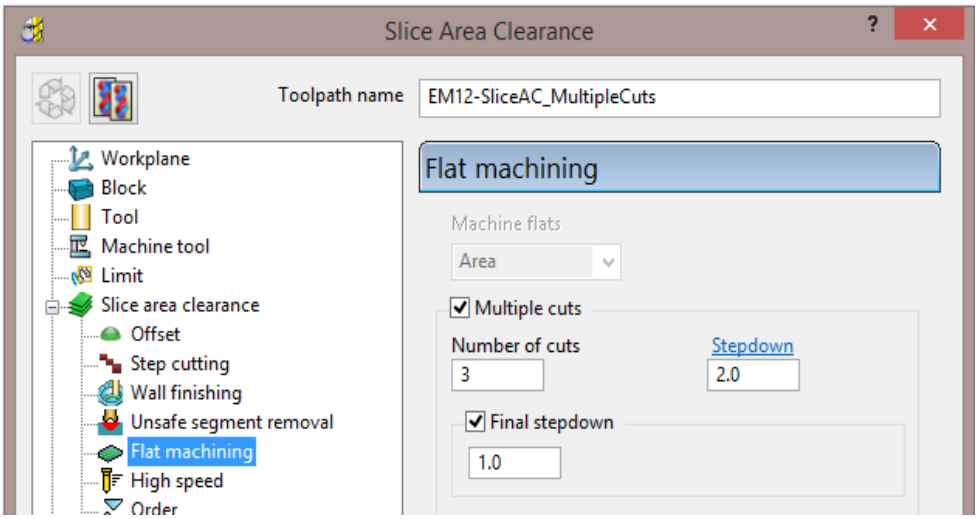

a Select the **Multiple cuts** option and set the Number of cuts as 3.

b Input the **Stepdown** as **2.0**

c Select the **Final stepdown** option and input **1.0**

24 Select **Calculate** to process the toolpath and then **Close** the dialog.

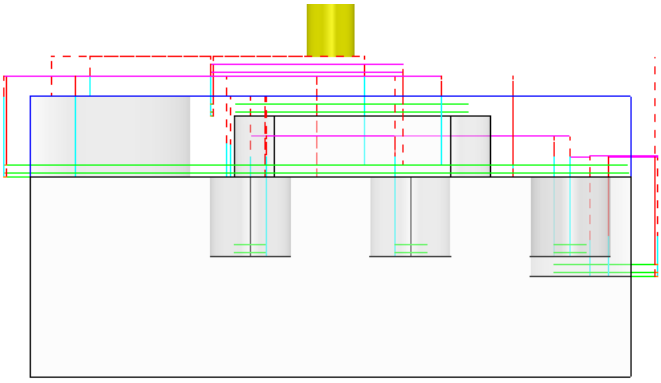

If there is a large amount of material remaining above the flat areas, then the **Multiple Cuts** option is applied to reduce the tool loading during **Area Clearance**.

*The 'D' shaped **Flat** area at the very top level does not use Multiple Cuts as the top of the Block is the overall Z limit for the strategy.*

*Select **File** - **Save Project*** to update:-

(.....\COURSEWORK\PowerMILL-Projects\AreaClearFlats)

 Copyright © Delcam Ltd

Further information on Area Clearance Machining

The following is reference information for the many different options contained in the **Area Clearance** dialogs. This can also be found by using **Help**.

Restrict Tool Overload – Trochoidal moves

This option is available to **Area Clearance** strategies in which **Style** - **Offset model** is set. The dialog for activating and entering the **Maximum overload** value (%) is located on the **High speed** options page.

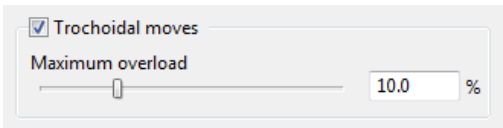

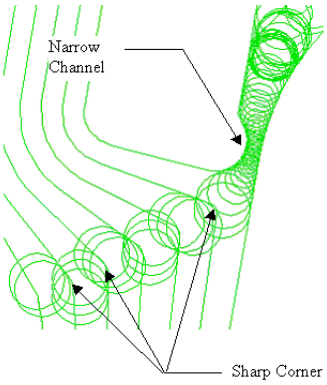

If the tool reaches a specified overload situation, **PowerMILL** automatically inputs a trochoidal path to eliminate full width cuts. This will occur in corners, narrow channels, slots, etc. The degree of movement is controlled with the slider as a percentage value of the specified stepover.

Thickness

Click the **Thickness** button in strategy dialogs to enter separate **Radial** and **Axial** thicknesses.

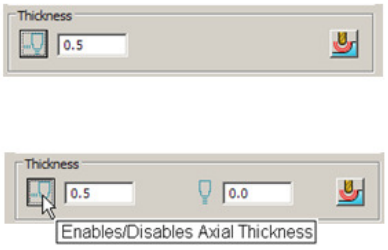

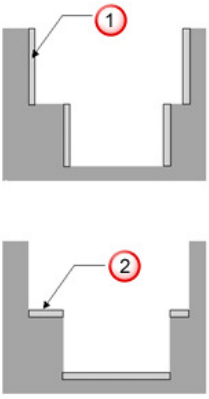

1 - Radial Thickness

2 - Axial Thickness

Z Heights – Manual entry

To manually enter Z heights in a strategy, select **Manual** from the **Stepdown** list.

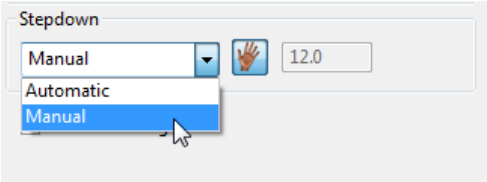

Click to display the **Area Clearance Z Heights** dialog.

Defined by defines how Z heights are specified. You can define a Z height by:

- **Number** - divides the block equally into the defined number of Z heights, the lowest of which will be at the bottom of the block.
- **Stepdown** – creates a Z height at the top of the block and then steps down a defined height in Z. The final Z Height will be at the bottom of the block.

  If the **Constant Stepdown** option is selected, the distance between all Z height levels remain constant. To achieve this, the actual stepdown value will more than likely have to be automatically modified to be less than the nominal value.
- **Value** - creates a single Z Height at the defined value.
- **Flat** - Identifies flat areas of the model and creates a Z height (+ thickness) at these values. It can also be set to machine the specific flat areas instead of the whole of the slice.
- **Intermediate** - adds a specified number of Z Heights between the current ones.

Append All - **Z Heights** can be also be appended from an existing **Model Area Clearance** toolpath using the **Reference** section of the **Area Clearance Z Heights** dialog.

Profiling

A profile move can be performed at each level to remove steps that are left by the cutter **Before**, **During**, or **After** a **Raster** - **Model Area Clearance** strategy. Additional profile passes can be applied when machining either on **Every Z** or the **Last Z** level with **Offset**, **Profile**, or **Raster** strategies.

When

The **When** settings on a **Raster** page in an **Area Clearance** strategy dialog allow you to determine when the profiling pass occurs during machining.

None – No profiling pass is performed

Before – The profiling pass is performed before the Raster path.

During – The profiling is performed at suitable intervals during the Raster path.

After – The profiling pass is performed last.

 Copyright © Delcam Ltd

Cut Direction

The **Cut Direction** settings control the direction of the tool along the toolpath:

Any – This instructs the cutter to machine in both directions.

Climb – This instructs the cutter to profile such that the material is to the right of the direction of travel (Climb milling).

Conventional – This instructs the cutter to profile such that the material is to the left of the direction of travel (Conventional milling).

Wall Finishing

The **Wall Finishing** page in the **Model Area Clearance** strategy dialog allows you to make an additional, final profiling pass to further reduce tool wear.

Allow tool outside block

The **Allow tool outside block** setting is available on the **Limit** page of the **Model Area Clearance** dialog.

This enables the strategy to exist outside the **Block** by the ***tool radius*** value.

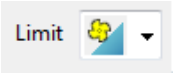

This option limits the strategy with the ***tool centre*** flush with the **Block**.

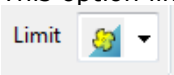

Flat Machining

The **Flat Machining** page of the **Model Area Clearance** dialog contains options to control if and how the flat areas of a component are machined. These include **Off**, **Area**, and **Level**.

Level - **Flat Machining** occurs across the whole area defined by the **Block**.

The nominal Stepdown value is locally reduced as required to accommodate each ***Flat*** area as part of an equally spaced group.

Area - **Flat Machining** is confined to the individual ***Flat*** areas.

The nominal **Stepdown** value remains constant (independent of the ***Flat*** areas).

Ramping

The **Ramp** option is available on the **Leads and Links** dialog to use where it is impossible to approach from outside the **Block** at the full machining depth (for example, within a pocket).

- There are 3 different options for the type of **Ramp** move - **Toolpath**, **Circle**, and **Line**. These can be used to lead on to the start of a tool track.
- The **Zig** angle is the angle of descent along the machining direction as the tool ramps into the material. If the length of the **Zig** angle is limited to a finite distance, a ramp move in the opposite direction (**Zag** angle) can also be applied.

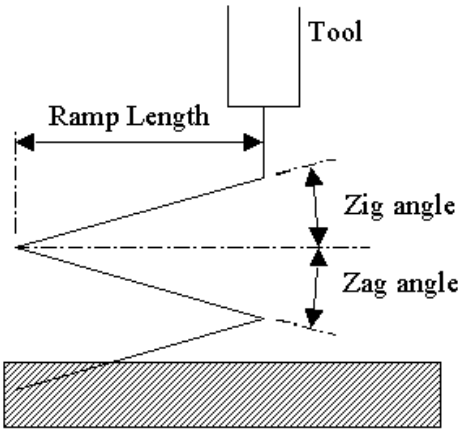

- The **Ramp Length** is defined as **Tool Diameter Units** (**TDU**). For example, A Ramp Length of **2 TDU** would equal 20 mm for a Dia 10 mm tool.
- If **Add approaches from outside** is set, it will take priority over **Ramping**.
- If the defined geometry for a **Ramp** move is such that it would cause a gouge, then the tool approaches using a default **Plunge** move.

 Copyright © Delcam Ltd

4. Finishing Strategies

Finishing strategies machine the actual component form, and where applicable, follow on from the **Area Clearance** operation. Suitable values are required to control the accuracy and amount of excess material to be left on a component by a toolpath. The parameters used for this purpose are called **Thickness** and **Tolerance**.

Thickness is the amount of extra material specified to remain on the work-piece after machining. This can be applied generally as an offset from the model (as shown), or independently as separate **Radial** and **Axial** values within the machining options.

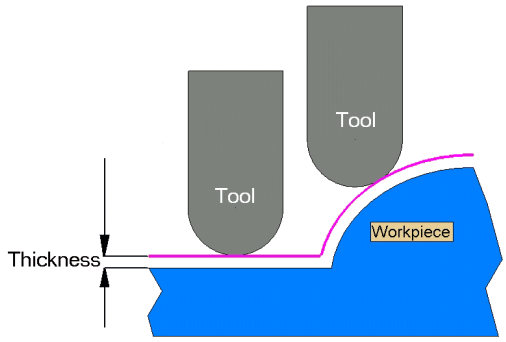

*It is also possible to assign additional **Thickness** values to selected surfaces on the **model** (Component Thickness).*

Tolerance controls the accuracy to which the cutter path follows the shape of the work-piece. For roughing, use a coarse tolerance, and for finishing use a fine tolerance.

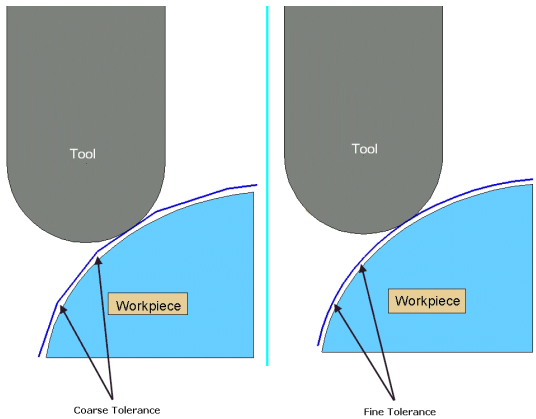

*A positive **Thickness** value should always be greater than the **Tolerance** value.*

Raster Finishing and Pattern Finishing

Raster Finishing works by projecting a wireframe, Pattern down the Z-axis onto the model. The standard pattern applied in **Raster Finishing** is obtained by entering values directly into the **Finishing** dialog. Two other types of standard pattern strategy (not covered in this course) include **Radial** and **Spiral**.

The **Pattern Finishing** strategy uses an existing, pre-defined **Pattern** or **Toolpath**, which is either projected down Z onto the model or used in situ as a **Drive Curve** to generate the toolpath.

Typical previews of all 4 available pattern strategies are shown below as viewed down Z.

Raster

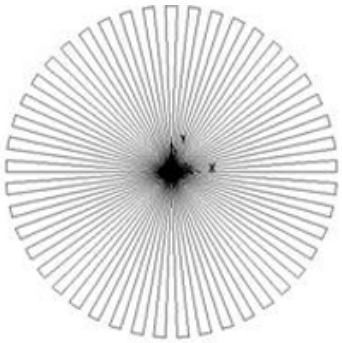

Radial

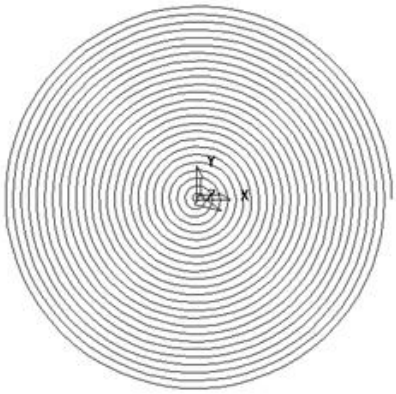

Spiral

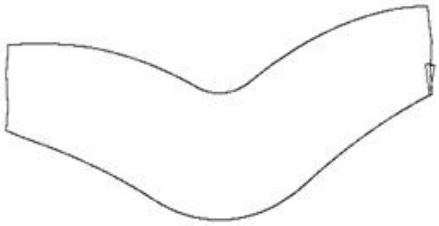

User-defined

The **Raster finishing** strategy is used as an example in the next section.

Raster Finishing

1. From the **Main** pull down menus select **File - Delete All** and **Tools** - **Reset Forms**.
2. Then select **File** > **Open Project**:

   …...\PowerMILL_Data\Projects\Handset_Start

Copyright © Delcam Ltd

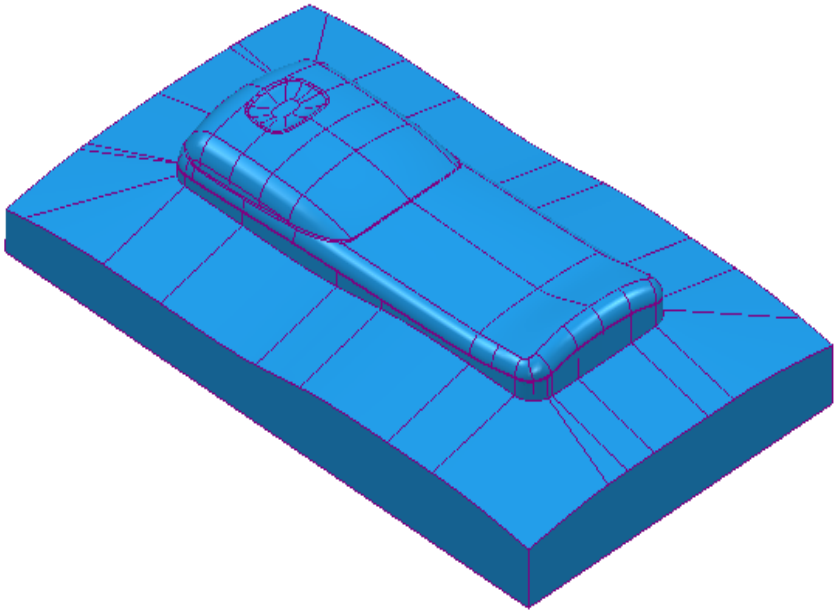

3 From the **Main** menu , select **File** >**Save Project As**:

.....\COURSEWORK\PowerMILL-Projects\Handset_PatternMC

4 **Activate** the existing toolpath **D25TR3-RGH1** to restore all the set-up settings.

5 **Activate** the tool **BN12**.

6 From the **main** toolbar, select **Toolpath Strategies** and from **Finishing** open a **Raster Finishing** strategy.

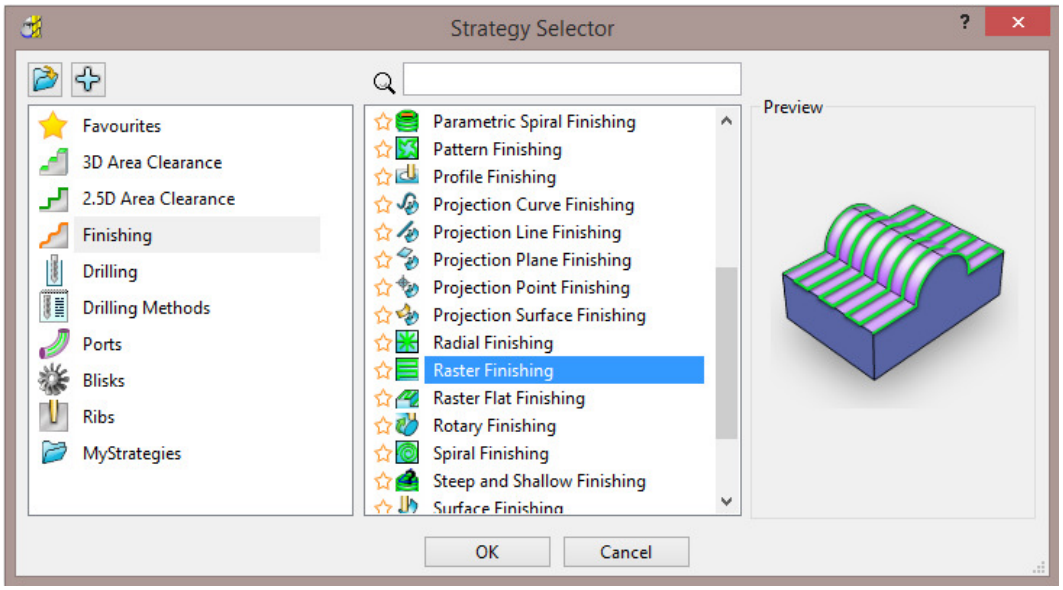

7 Click **OK** to display the **Raster Finishing** strategy dialog and enter the following settings and values.

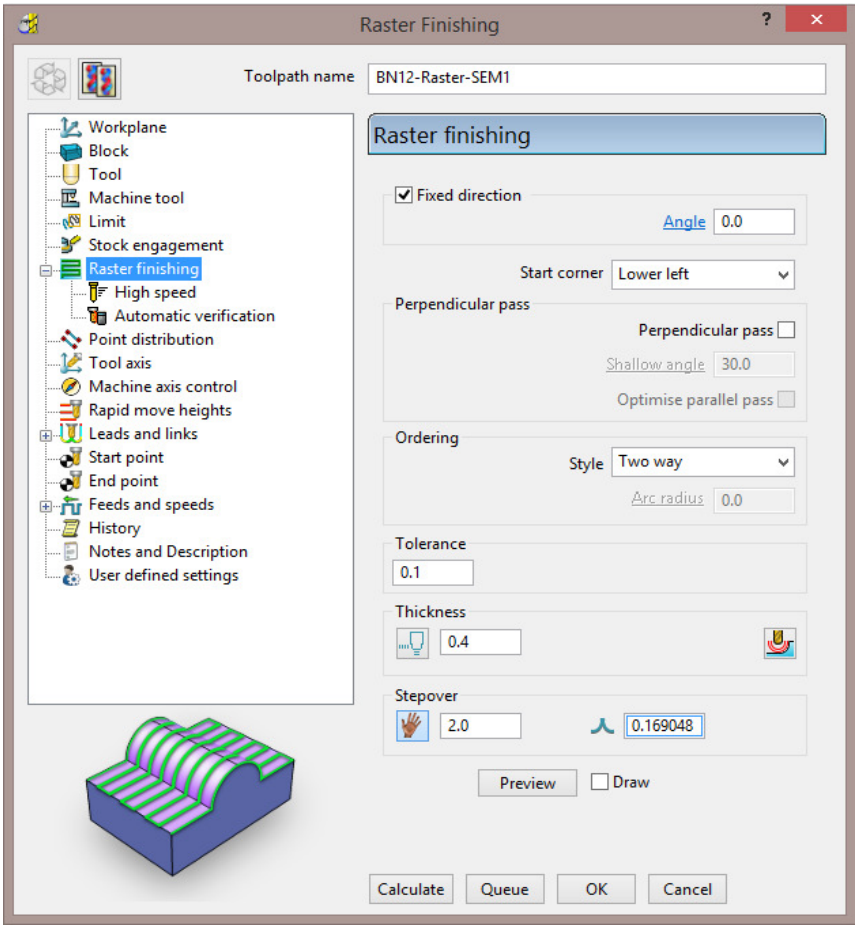

a Name the toolpath **BN12-Raster-SEM1**.

b Enter the **Tolerance** as **0.1** and **Thickness** as **0.4**

c Select **Ordering** - **Style** as **Two Way**.

d Enter a **Stepover** of **2**

e Click the **Preview** tab to display the pattern (as shown below).

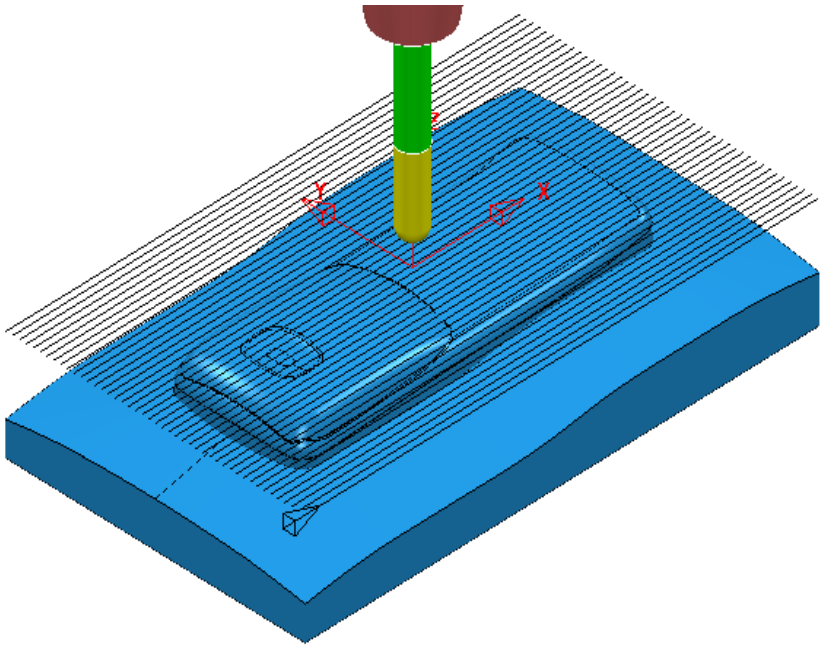

 Copyright © Delcam Ltd

Several options exist to add **lead and link** moves at the start and end of each individual tooltrack. The aim is to provide a smoother transition for the tool to approach tangentially onto the component form instead of simply plunging directly down the Z-axis.

8 In the **Raster Finishing** dialog open the **Leads and Links** options (left click on the small box containing +).

9 Select the **Lead in** page and select ***1st choice*** as **Vertical arc**, input ***Angle* 90**, ***Radius* 6.0**, and un-tick the option **Add leads to short links**.

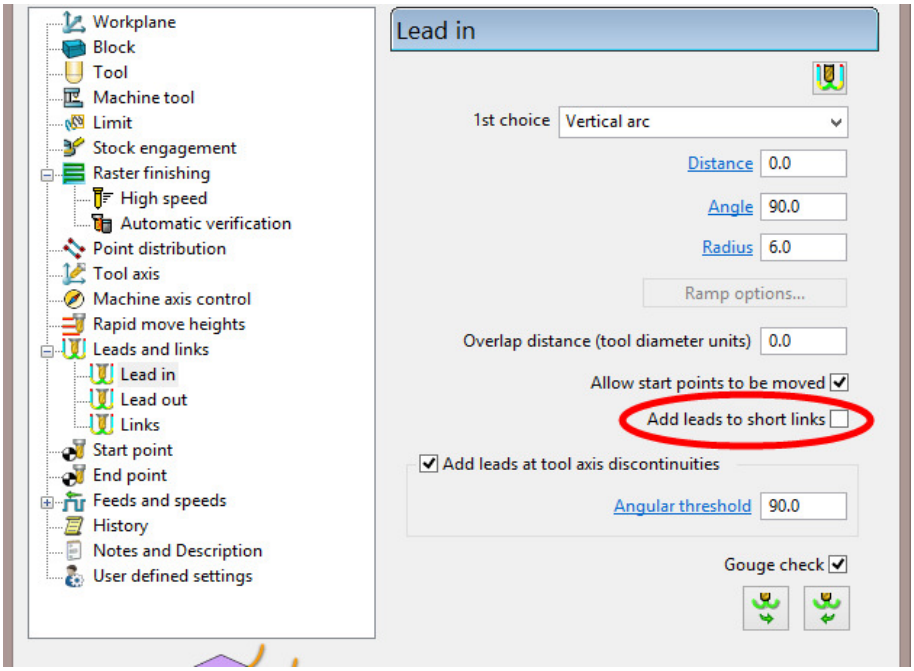

10 Select **Lead out the same as lead in**.

11 Select the **Links** page and input the value and options exactly as shown in the following image.

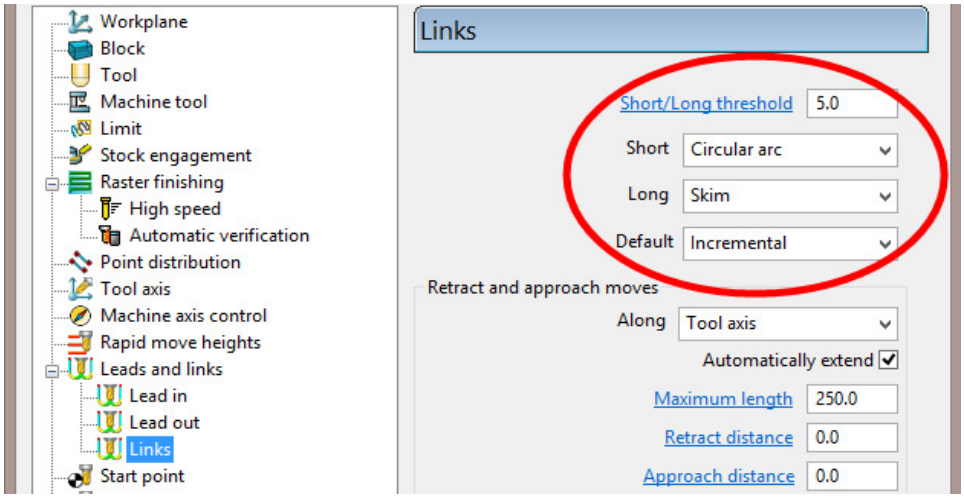

12 Click **Calculate** to process the toolpath and then **Close** the dialog.

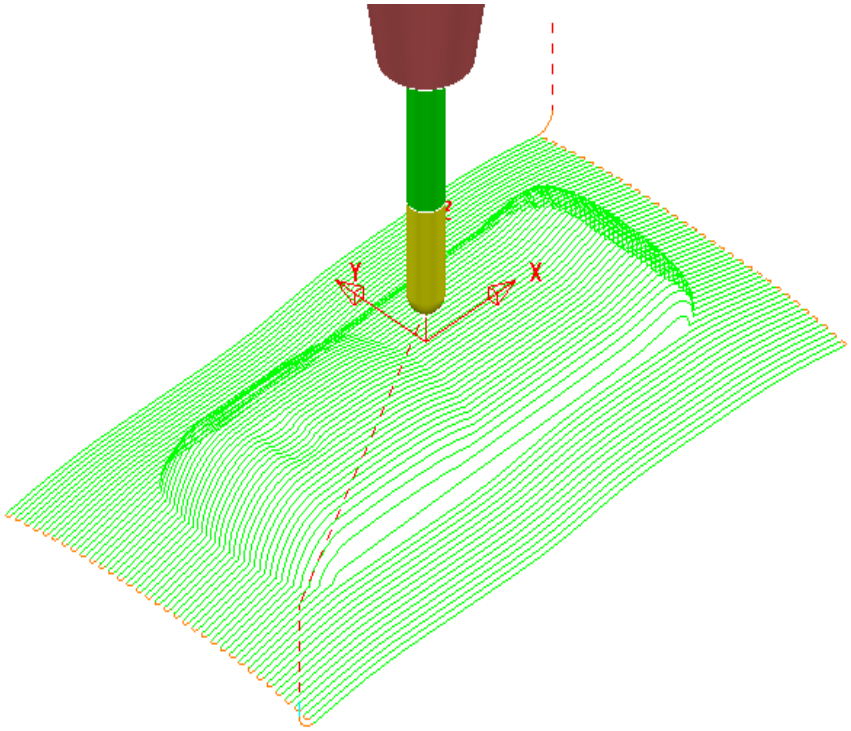

The above toolpath contains sharp corners along the vertical plane. These can be **arc fitted** within the **Raster Finishing** dialog.

In the **Raster Finishing**, **High speed** page the **Arc fit corners** option inserts a radius in the vertical plane (maximum **0.2** Tool Diameter Units).

13 In **PowerMILL** ***explorer***, right-click the **BN12-Raster-SEM1** toolpath and select **Settings**.

14 Click to enable the toolpath **BN12-Raster-SEM1** to be edited.

15 On the strategy dialog:

a Open the **High speed** page.

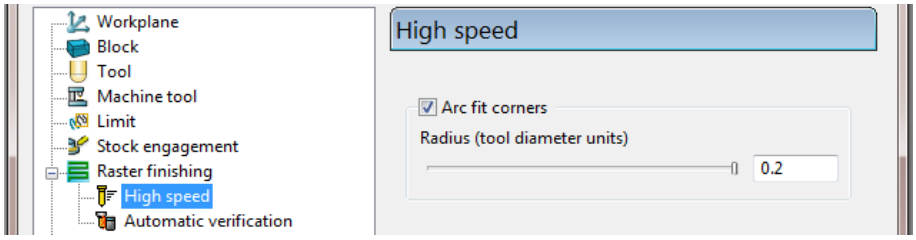

b Select the **Arc Fit** option and edit the **Arc Radius** to the maximum value **0.2**

c Click **Calculate** to process the toolpath and then **Close** the dialog.

16 Zoom into the toolpath to view the ***arc fitted*** tooltracks:

 Copyright © Delcam Ltd

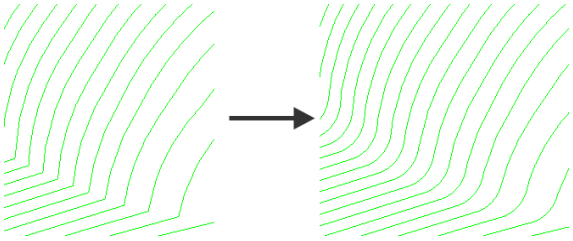

The value **0.2** (**TDU**), multiplied by the tool diameter (**12**) produces a radius of **2.4**

17 In **PowerMILL** ***explorer***, right-click the **BN12-Raster-SEM1** toolpath and select **Settings**.

18 Click to create a copy of the toolpath named **BN12-Raster-SEM1_1**

19 Rename the new toolpath as **BN12-Raster-FIN1** and input suitable finishing values as shown in the following image.

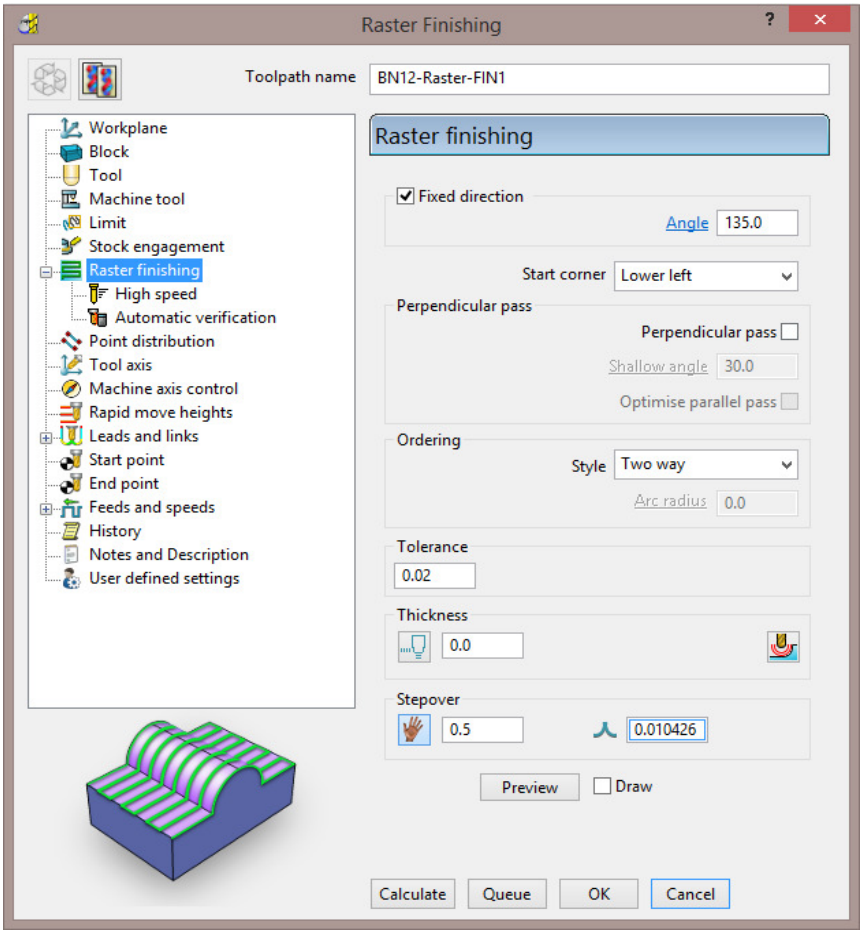

20 Click **Calculate** to process the toolpath and then **Close** the dialog.

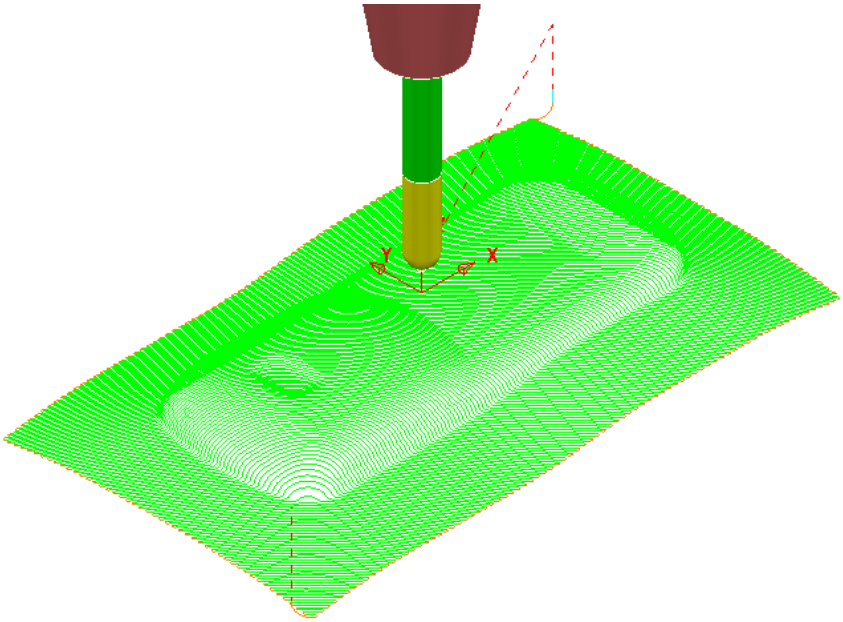

If the ***raster pattern*** is projected downwards parallel to a steep wall then the actual distance between the tooltracks is likely to become unacceptably large.

For this reason the ***raster pattern*** in **BN12-Raster-FIN1** has been created at a **135 Angle** to minimise where the tooltracks run parallel to steep walls.

21 Run a full **ViewMILL** simulation on all 3 existing toolpaths.

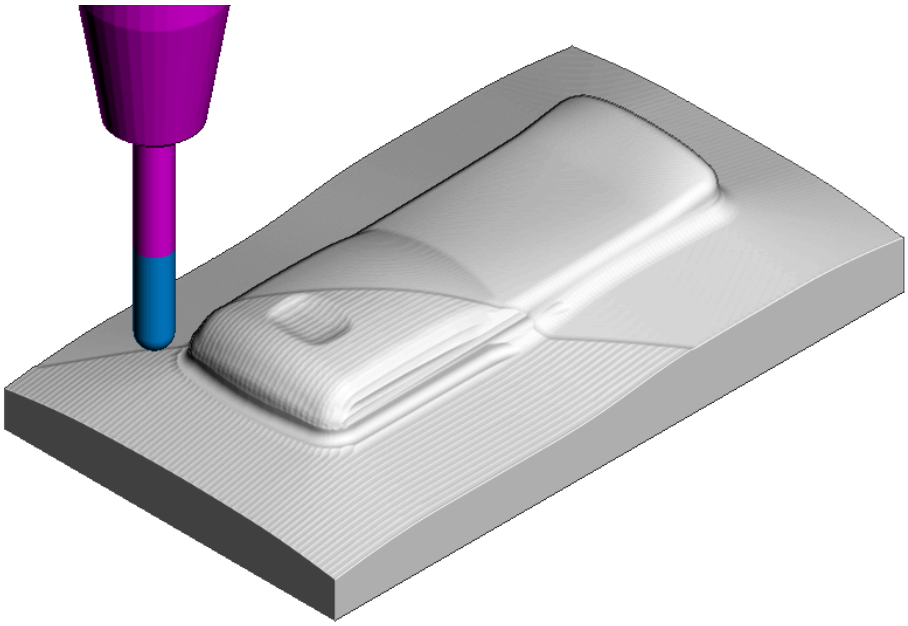

22 Disconnect **ViewMILL** from the simulation process (Change the sphere from green to red) and then select **No Image** to return to the **PowerMILL** view.

 Copyright © Delcam Ltd

Pattern Finishing

This strategy requires a user-defined **Pattern** to be projected onto the **model** as a toolpath. This option can be used for applications such as scribe lines, text, and custom strategies. A **Pattern** is created either from within **PowerMILL** or from imported wireframe CAD data.

23 In the **PowerMILL *explorer***, right-click **Patterns** and select **Create Pattern**.

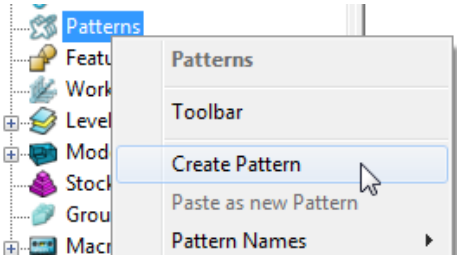

A new, empty **Pattern** is created.

24 Right mouse click on the new empty **Pattern** and from the local menu select **Insert** - **File** to access the Open Pattern dialog.

25 Click ***button 2*** (Shown inside red border below) on the **Open Pattern** dialog:

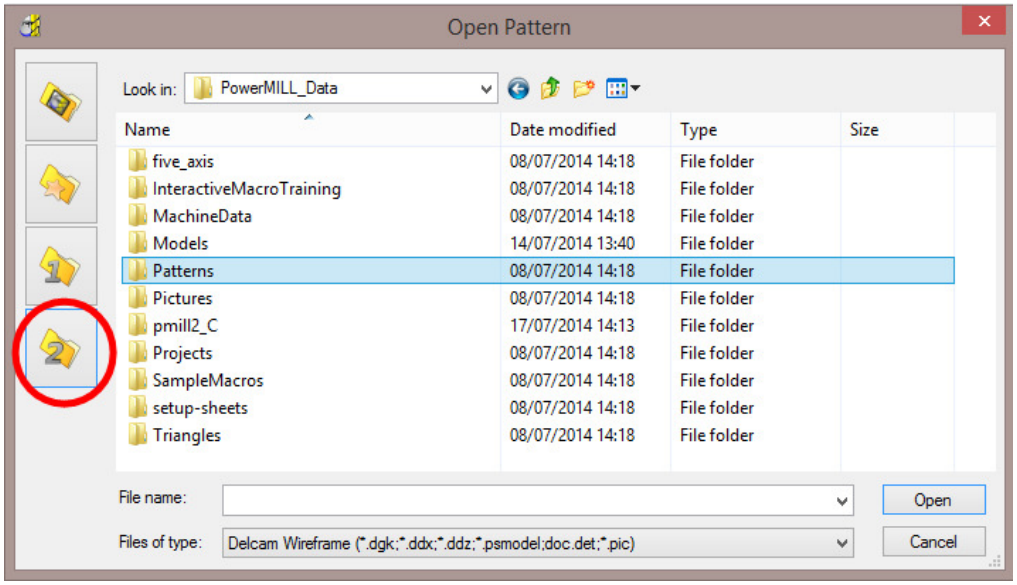

26 Double click the **Patterns** folder and then select the **Engrave1.dgk** file.

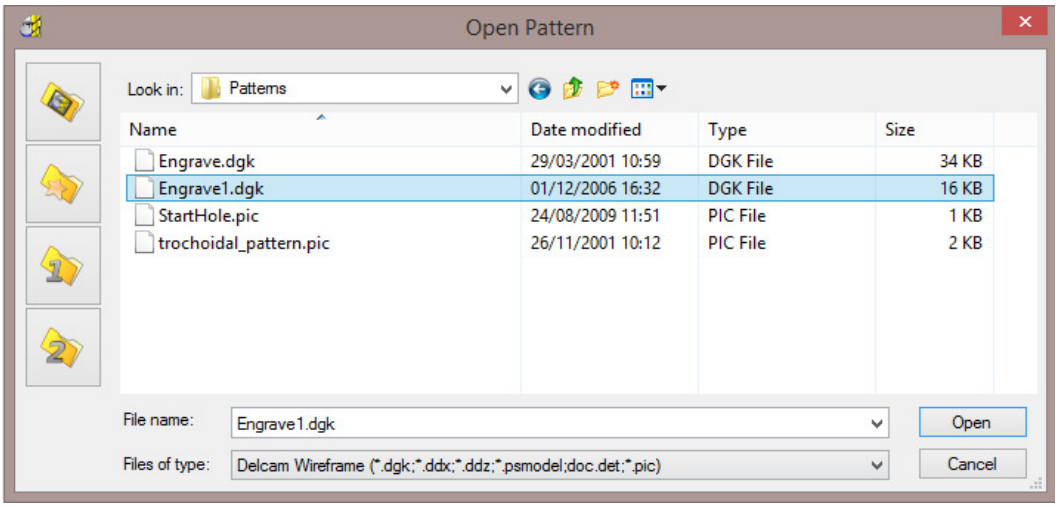

27 Click **Open**.

The imported **Pattern** is made up of 2D geometry and is positioned relative to the **Transform** (World co-ordinates).

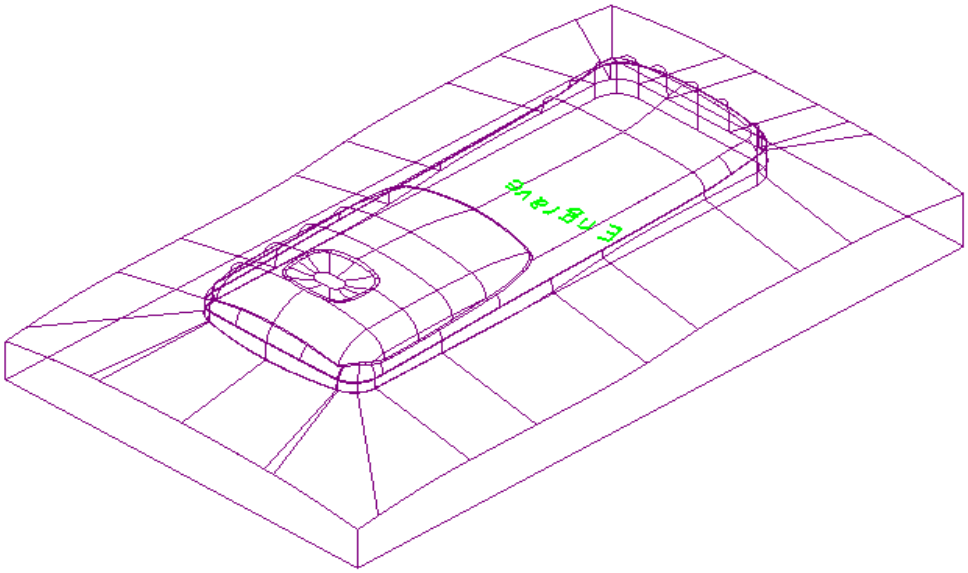

Next this 2D geometry will be projected along Z onto the 3D model to create a single **Pattern Finishing** toolpath with a negative **Thickness** value.

28 **Activate** the tool **BN1**.

29 From the **main** toolbar, select **Toolpath Strategies** and from **Finishing** open a **Pattern Finishing** strategy.

 Copyright © Delcam Ltd

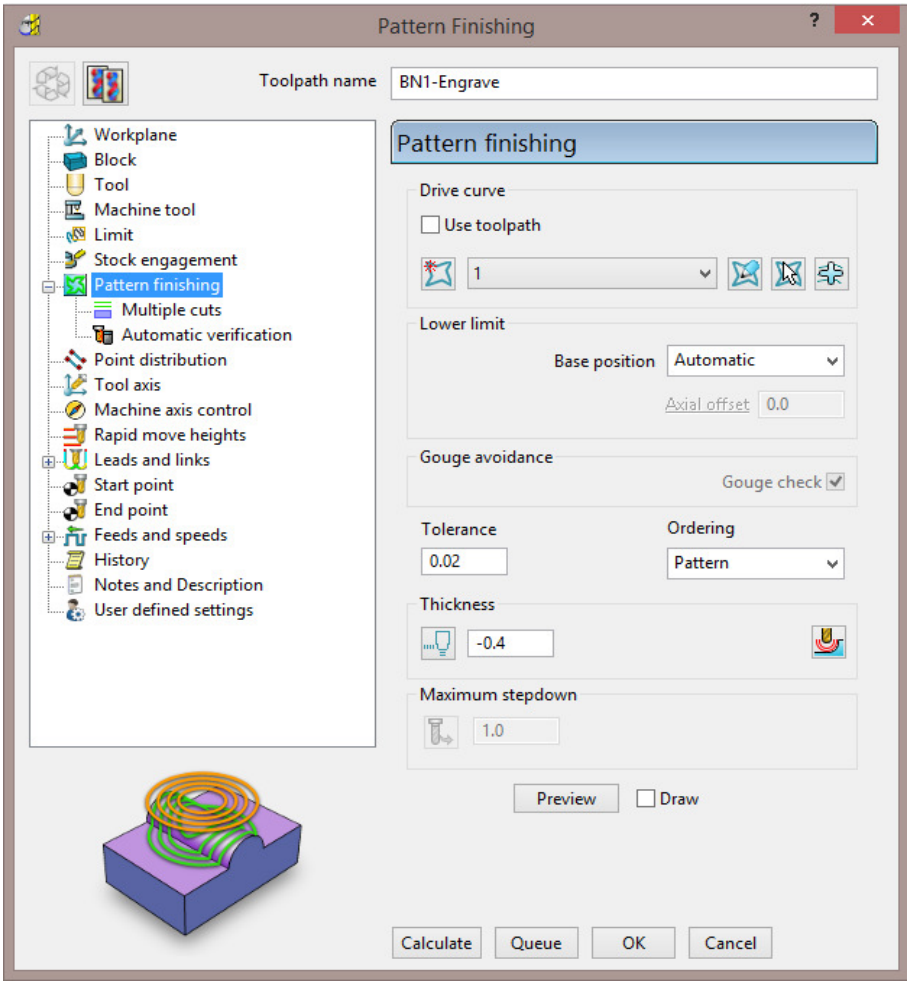

a Enter the ***Toolpath name*** **BN1-Engrave**

b Input ***Pattern*** **1**.

c In 3-Axis applications the ***Base position*** can be set to either **Automatic** or **Vertical**, for the **Pattern** form to be projected down **Z** onto the **model**.

d Enter a **Tolerance 0.02** and **Thickness -0.4**

30 Select the **Lead in** page and select ***1st choice*** as **None**.

31 Select the option **Lead out the same as lead in**.

32 Select the **Links** page and input the value and options exactly as shown in the following image.

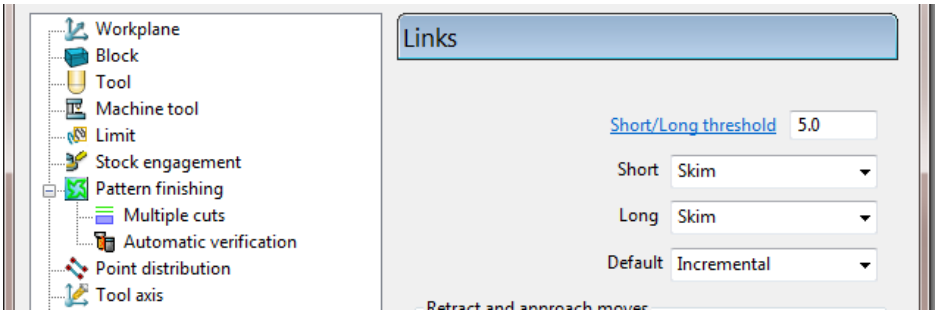

33 Select **Calculate** to process the toolpath then **Close** the dialog.

The **Pattern** is machined to an offset depth of **-0.4** into the finished **model** form.

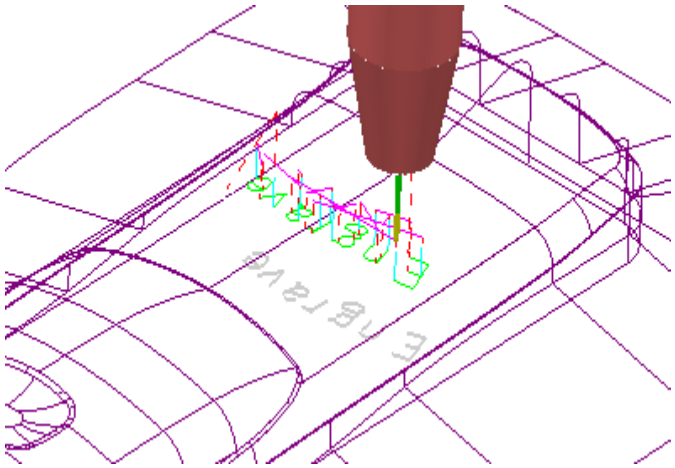

*It is not possible to use a –ve thickness value that is greater than the Tool Tip Radius. There is, however, an alternative way to achieve this (**Chapter 10 Patterns**, **page 20** - **Deep Pattern Machining**).*

34 **Simulate** the engraving toolpath in **ViewMILL**.

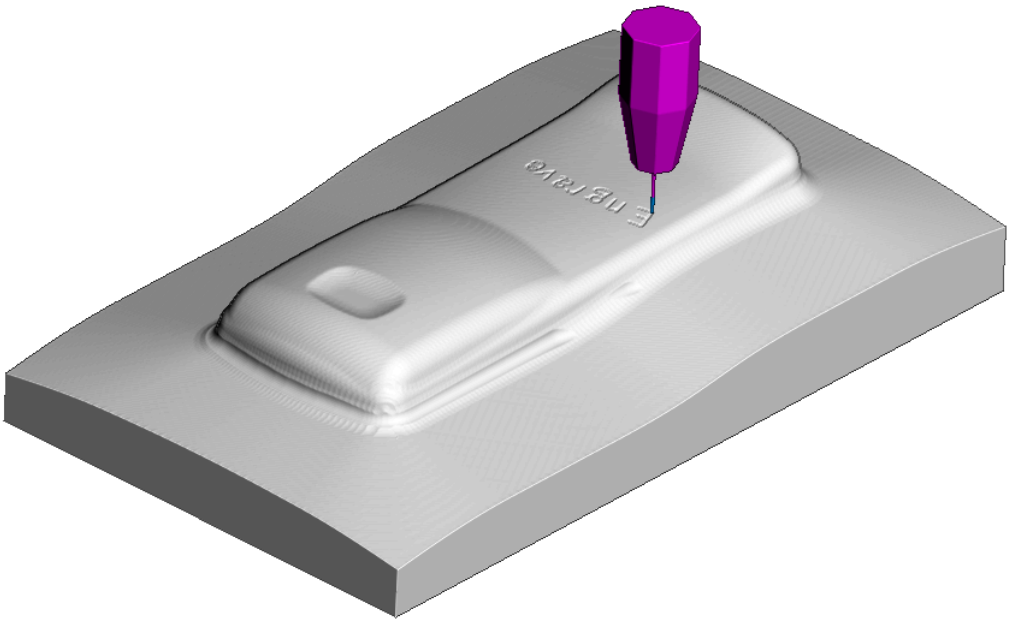

35 Select **File** - **Save Project** to update the contents of:

.....\COURSEWORK\PowerMILL-Projects\Handset_PatternMC

 Copyright © Delcam Ltd

3D Offset and Constant Z Finishing

In this section, **3D Offset** and **Constant Z** finishing strategies are applied to a model that consists of a combination of flat and steep areas plus a pocket with vertical walls. In this example a **Boundary** will be created and used to limit the two strategies to where they are most effective.

1. Select **File** - **Delete All** and **File** - **Reset Forms**.
2. Select **File** - **Open Project** and in the dialog browse to:

   ……\PowerMILL_Data\Projects\camera_start

   The **Project** is locked and subsequent changes cannot be saved unless the included **lock** file is deleted.

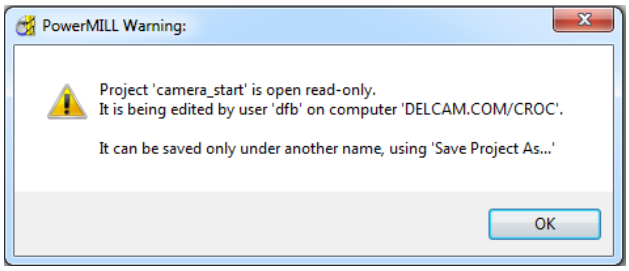

3. Select **OK** to continue loading the **Project** into the **PowerMILL** session.
4. From the **Main** pull down menus, select **File** > **Save Project As**:

   ……\COURSEWORK\PowerMILL_Projects\Camera_Example

The **Project** already contains a **Tip Radiused** tool and a **Model Area Clearance** toolpath along with the associated settings.

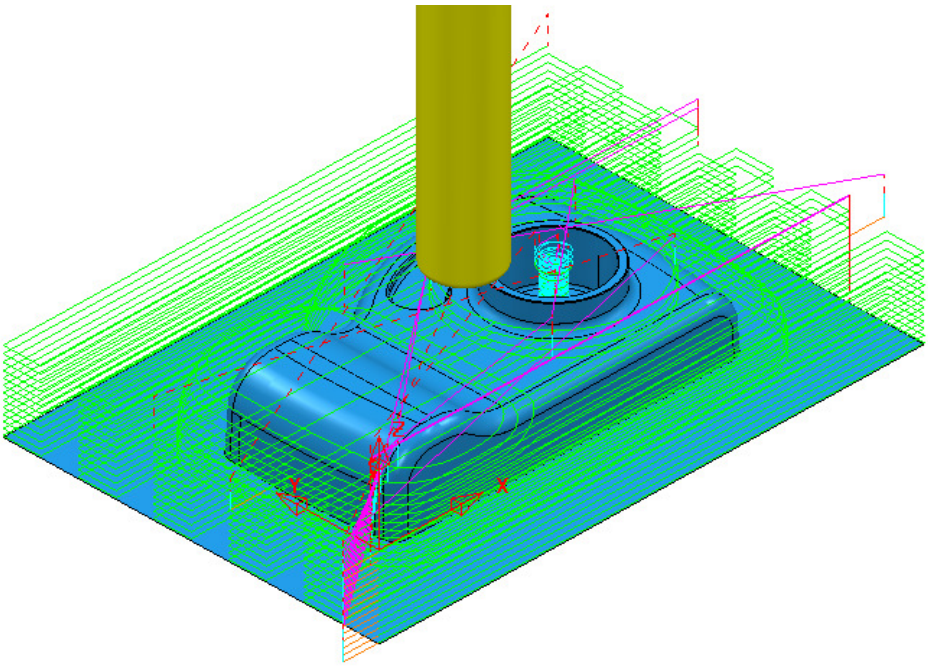

Creation of a Shallow Boundary to define specific machining areas

A **Shallow Boundary** creates segments around areas of the **model** that are defined by an ***Upper*** and ***Lower*** threshold angle. It is therefore specifically suited to steep walled and shallow surface machining techniques.

*There are several other types of **Boundary options** available to suit various applications and these are covered later in **Chapter 6**.*

In the below example, a **Shallow Boundary** is used to discriminate areas most suited to the individual machining strategies. This type of **Boundary** is calculated, taking the ***Active*** **Tool**, **Thickness**, and **Tolerance** into consideration.

1 Define a **Ball Nose** tool of **Diameter 10** called **BN10**.

2 In the **PowerMILL** ***explorer***, right-click **Boundaries** and select **Create Boundary** > **Shallow**.

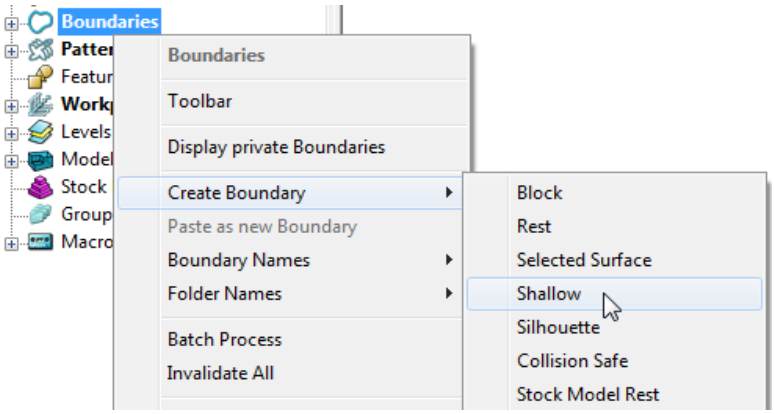

3 In the displayed **Shallow Boundary** dialog:

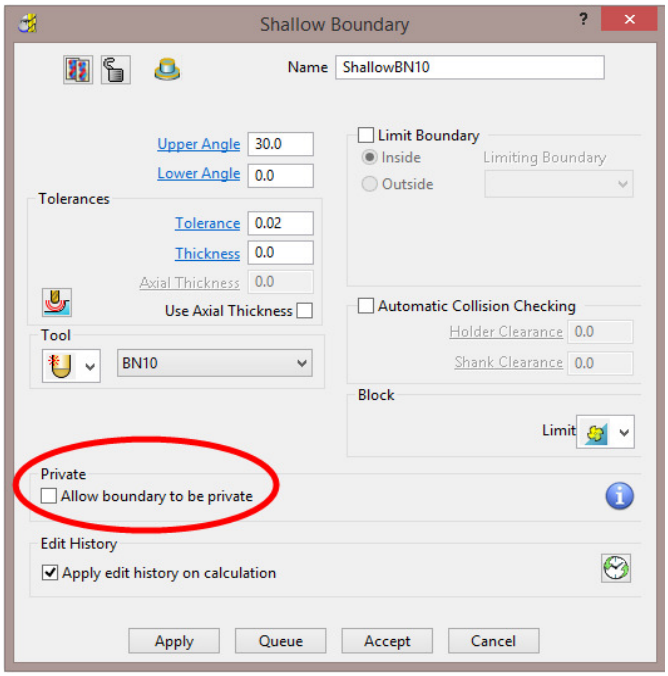

 Copyright © Delcam Ltd

a Enter the **Name** as **ShallowBN10**

b Enter ***Upper Angle*** **30** and ***Lower Angle*** **0**

c Enter ***Tolerance*** as **0.02**

d Enter ***Thickness*** as **0**

e Ensure the correct tool **BN10** is **Active**.

f **Un-tick** the box, ***Allow boundary to be private***.

g **Apply** and **Accept** the dialog.

With the **model**, **Tool**, and **toolpaths** undrawn, the **Boundary** can be viewed as shown:

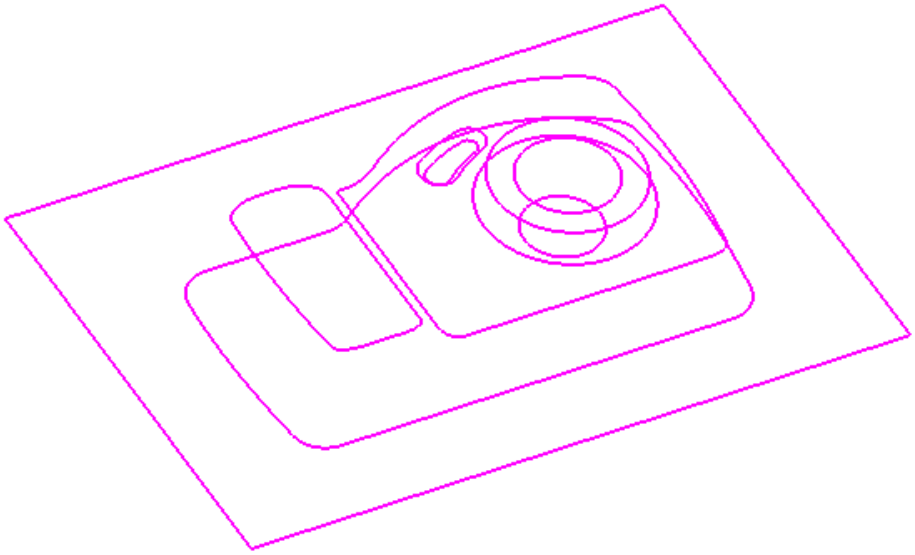

This **boundary** is made up of numerous segments; each one dividing the model into **steep** and **shallow** areas. Any of these segments can be selected and individually deleted at any time, except when it is assigned to a toolpath and locked.

Constant Z Finishing

Constant Z Finishing projects each tool track horizontally onto the component at fixed heights defined by the **Stepdown**.

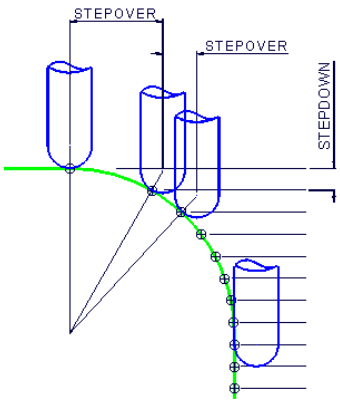

As the component surface becomes shallow, the actual tool stepover increases until it becomes non-existent on flat areas.

1 From the **main** toolbar, select **Toolpath Strategies** and from **Finishing** open a **Constant Z Finishing** strategy.

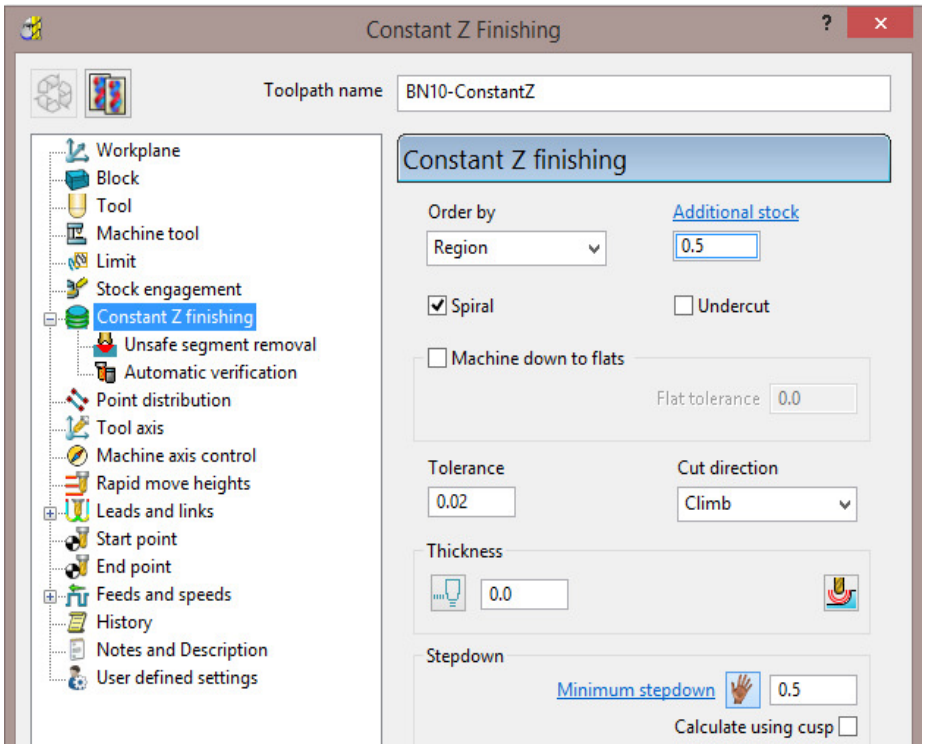

2 In the **Constant Z Finishing** dialog:

a Enter a **Toolpath name** – **BN10-ConstantZ**

b ***Tick*** the **Spiral** option.

c Enter a **Tolerance** of **0.02**

d Set the **Cut Direction** to **Climb**.

e Enter a **Stepdown** of **0.5**

 Copyright © Delcam Ltd

3 On **Constant Z finishing** dialog, select the **Limit** page and with the ***Boundary*** **ShallowBN10** active, set **Trimming** to **Keep outside**.

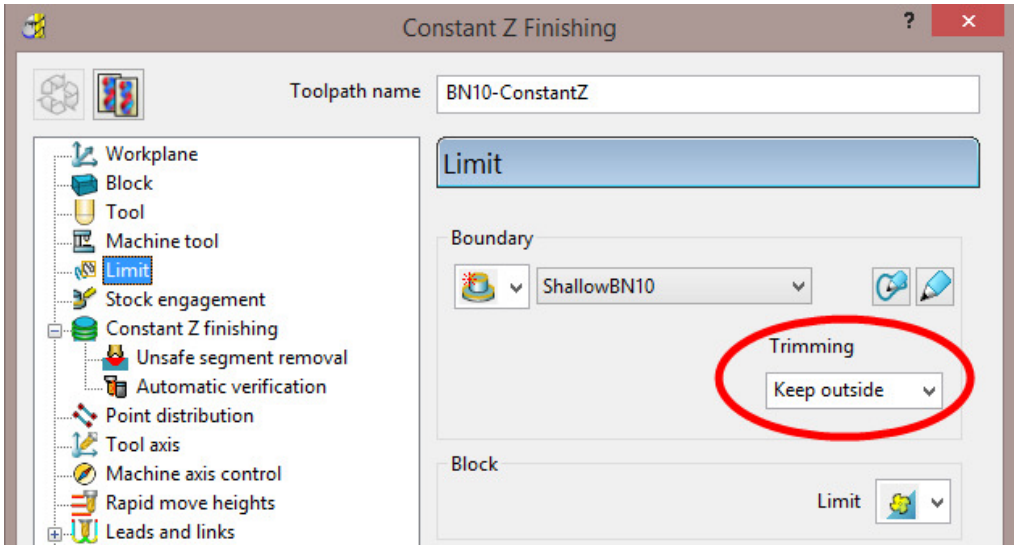

4 Click **Calculate** to process the toolpath and then **Close** the dialog.

By using the **Boundary - Trimming** option as **Keep outside**, the toolpath is limited to the steep areas of the **model**.

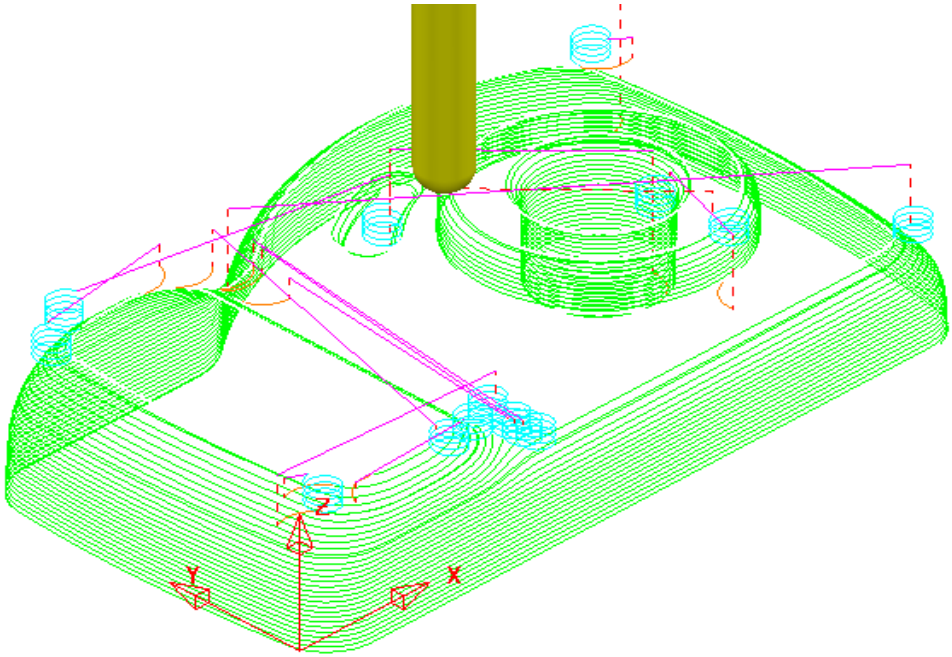

Introduction to Leads and Links

The current toolpath (**BN10-ConstantZ**) has inherited circular **Ramp** lead moves (pale blue) from the previously activated toolpath **RoughOp1**. From the **main** toolbar we will open the **Leads and Links** dialogue and apply **Horizontal Arcs** to both the start and end of the **Long** link moves and **On Surface** to the **Shor**t link moves (**< 4**).

1. Click the **Leads and Links** button on the **Main** toolbar.
2. Select the **Lead In** tab and:
   a. In **Lead in**, change the **1st Choice** to **Horizontal Arc**, **Angle 90** and **Radius 5**
   b. Tick the **Add leads to short links** box.
   c. Click the **Lead Out the same as lead in** button.
3. **Apply** and **Accept** the dialog.

The tool now ***leads in*** and ***out*** of the active toolpath with a **Horizontal arc**.

If the tool lifts, it will only lift by the **skim** distance taken from the first page of the **Leads and Links** dialog (**Z Heights** tab).

The **rapid feed** moves at ***skim height*** are purple in colour while the **plunge feed** moves are light blue.

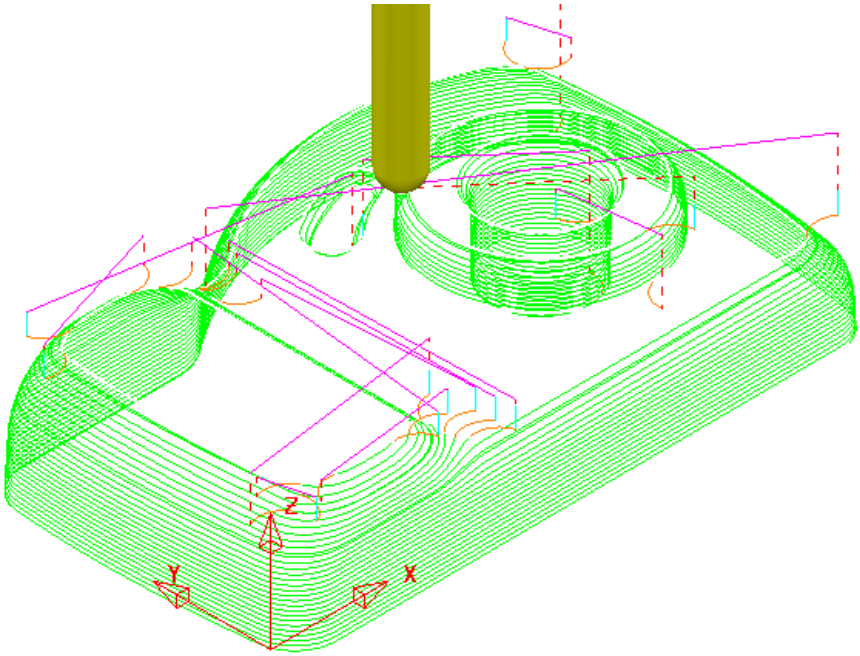

 Copyright © Delcam Ltd

3D Offset Finishing

3D Offset Finishing creates the toolpath **stepover** relative to the ***3D Model*** providing consistency over both flat and steep areas. To produce an improved tool movement over the model a **Shallow Boundary** will be used to limit this strategy to where it is most effective.

1 From the **main** toolbar, select **Toolpath Strategies** and from **Finishing** open a **3D Offset Finishing** strategy.

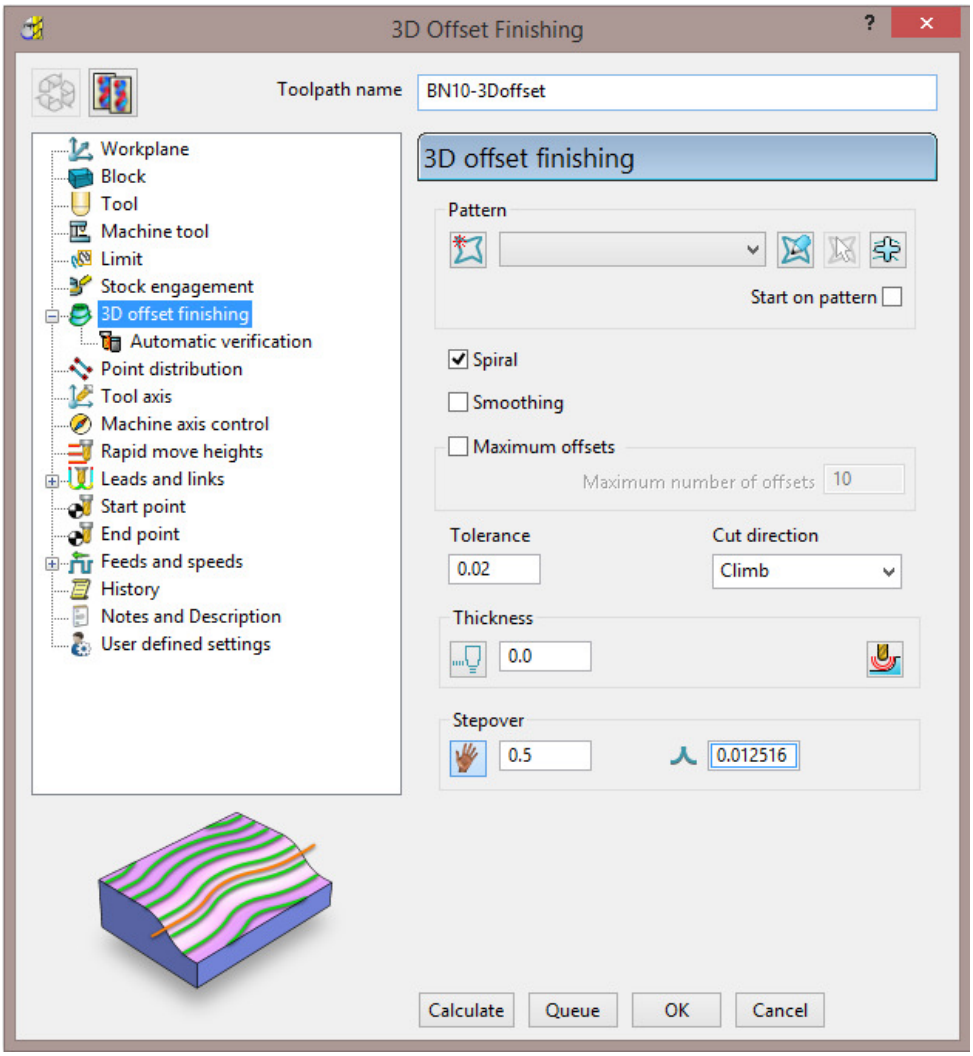

2 In the **3D Offset** Finishing strategy dialog:

a Enter ***Toolpath name*** as **BN10-3Doffset**

b ***Tick*** the **Spiral** option

c Set the ***Cut Direction*** to **Climb**

d Enter a ***Tolerance*** of **0.02**

e Enter a ***Thickness*** of **0**

f Enter a ***Stepover*** of **0.5**

3 On the **3D Offset** finishing dialog, select the **Limit** page

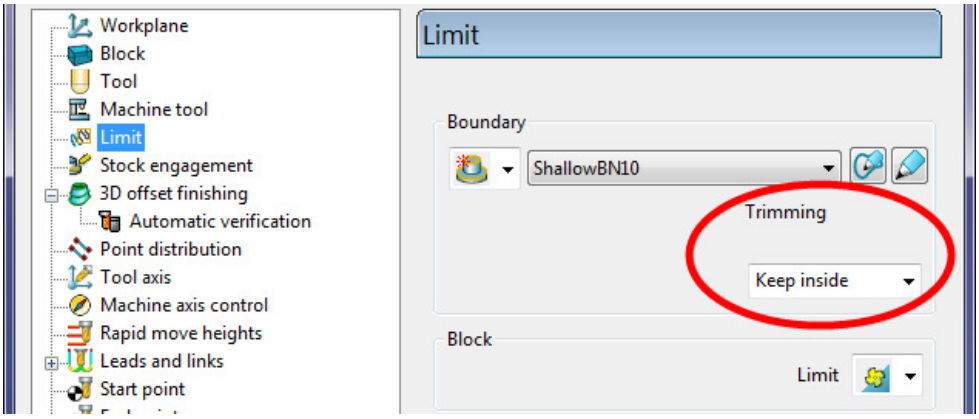

4 Select the **Boundary - ShallowBN10**.

5 Select **Calculate** to create the **toolpath** and then **Close** the dialog.

The **Toolpath** follows the contours of the **Boundary** segments and is produced only within the ***shallow*** areas of the **model** (***Inside*** the **Boundary**).

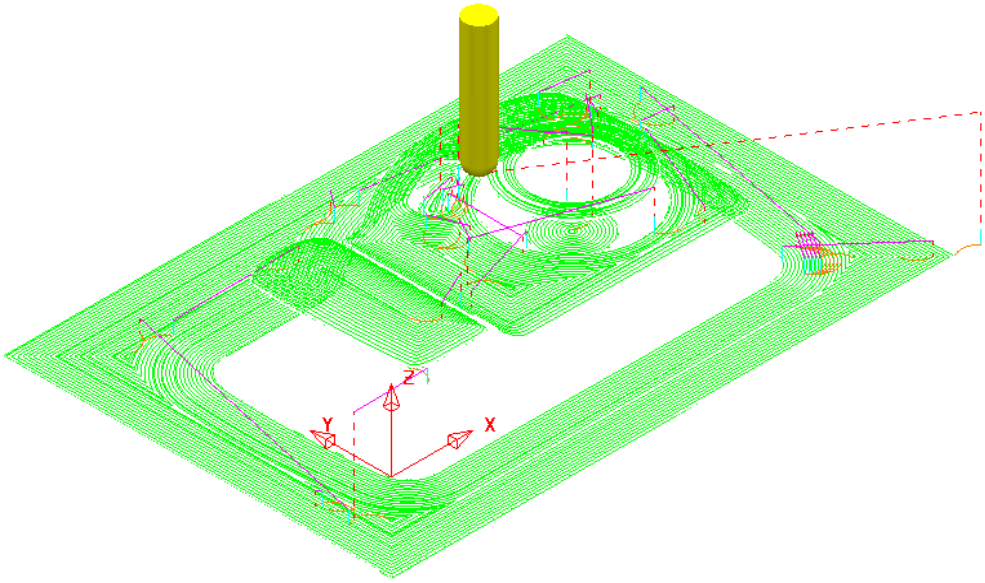

This ***toolpath*** has inherited the current settings in the **Leads and Links** dialog, as applied to the previous ***toolpath*** **BN10-ConstantZ**. A more suitable option for bot **Lead in** and **Lead out** would be **Vertical arc**.

6 Click the **Leads and Links** button from the top of the screen.

7 Select the **Lead in** tab and:

a Un-tick **Add leads to short links**, change the **1st Choice** to **Vertical Arc**, **Angle 90** and **Radius 5.**

b Click the **Lead Out the same as lead in** button.

8 **Apply** and **Accept** the dialog.

 Copyright © Delcam Ltd

The **toolpath** now is more efficient with the rapid moves at ***skim height***, the ***long links*** using **Vertical Arc** Leads, and the ***short links*** being linked along the surface.

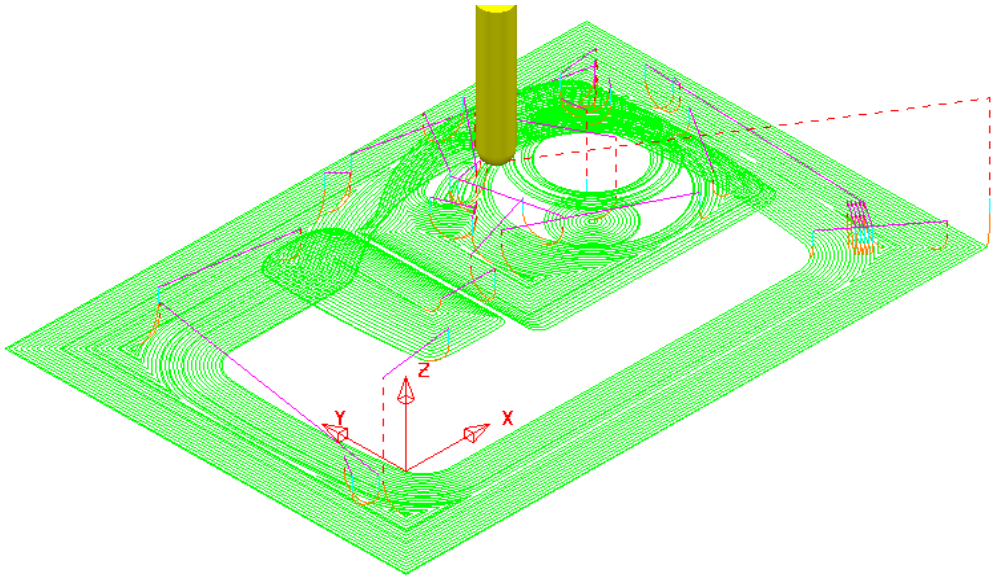

*To further improve this **3D Offset** strategy, you can tick the **Smoothing** option. This results in sharp corners being replaced with a smooth blend wherever possible.*

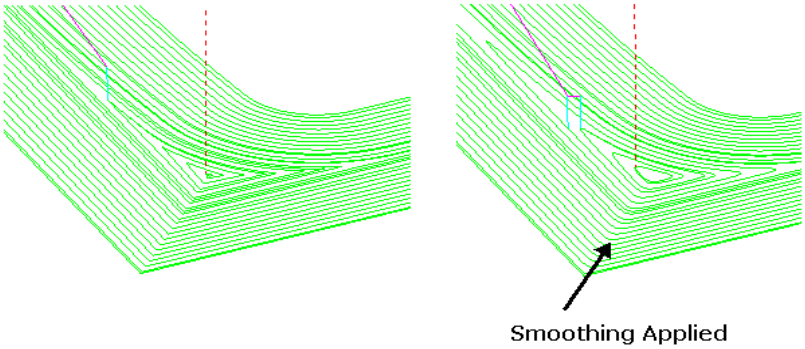

9 **Simulate** all of the toolpaths in **ViewMILL**.

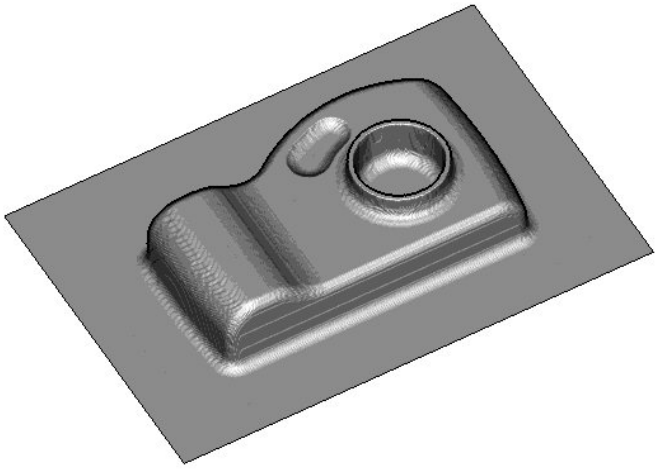

10 Select **File** – **Save Project** to update (but do not close):-

To update:- **.....\COURSEWORK\PowerMILL-Projects\Camera_Example**

Optimised Constant Z Finishing

This strategy is a mixture of **Constant Z** and **3D Offset** machining; **Constant Z** is applied to steep areas and, **3D Offset** is applied to other areas.

11 De-activate the **Boundary**, ***ShallowBN10*** in the **PowerMILL *explorer***.

12 From the **main** toolbar, select **Toolpath Strategies** and from **Finishing** open an **Optimised constant Z Finishing** strategy.

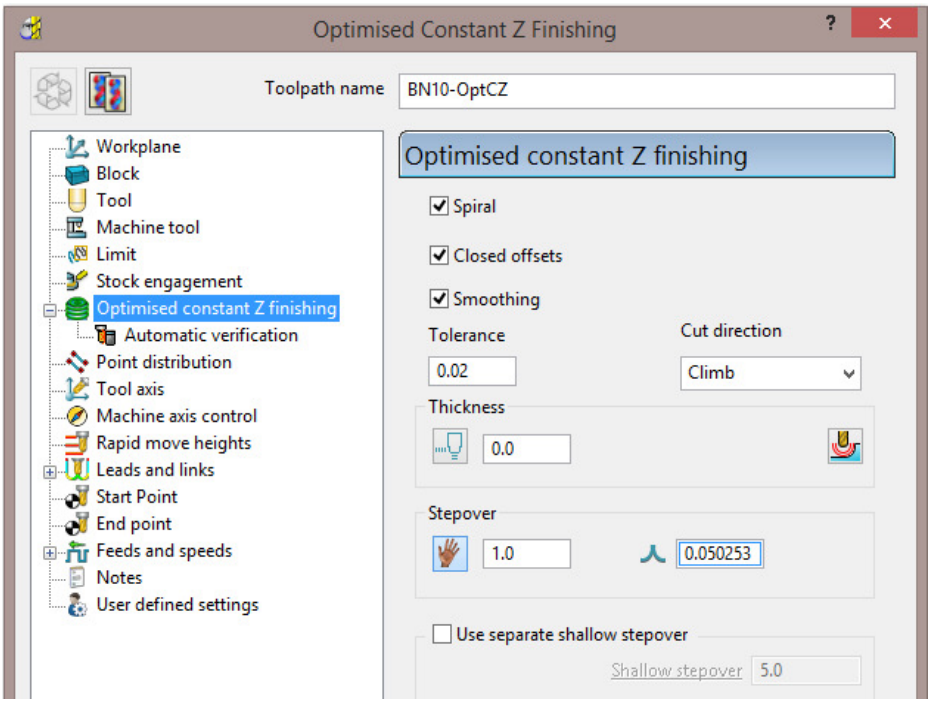

a Enter **Toolpath name** as **BN10-OptCZ**

b ***Tick*** the **Spiral**, **Closed Offsets**, and **Smoothing** options.

c Enter the **Tolerance** as **0.02**

d Set the **Cut direction** to **Climb**.

e Enter a **Stepover** value of **1**

f On the **Limit** page, make sure that the **Boundary** is not selected.

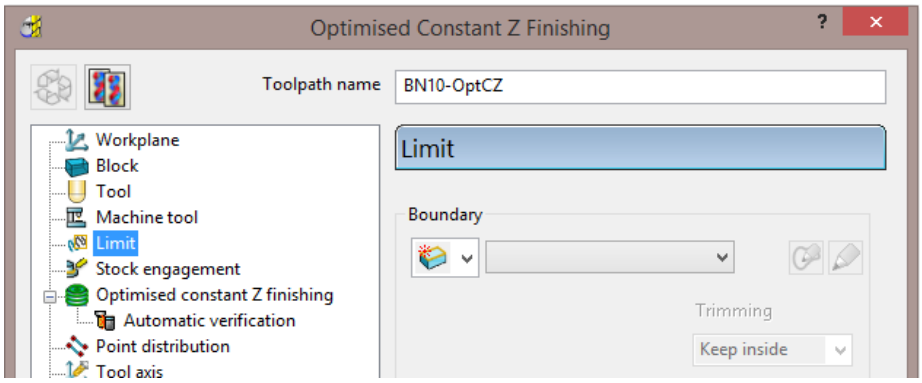

13 Select **Calculate** and when the toolpath is created, **Close** the dialog.

Note the consistent 3D **Stepover** across the whole component.

 Copyright © Delcam Ltd

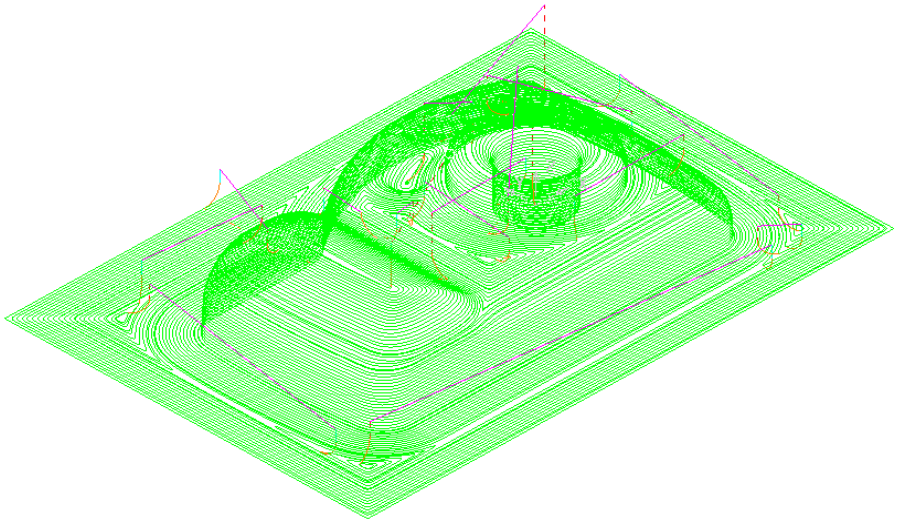

14 From the **Main** menu, click the **Leads and Links** button to display the **Leads and Links** dialog and then, select the **Links** tab.

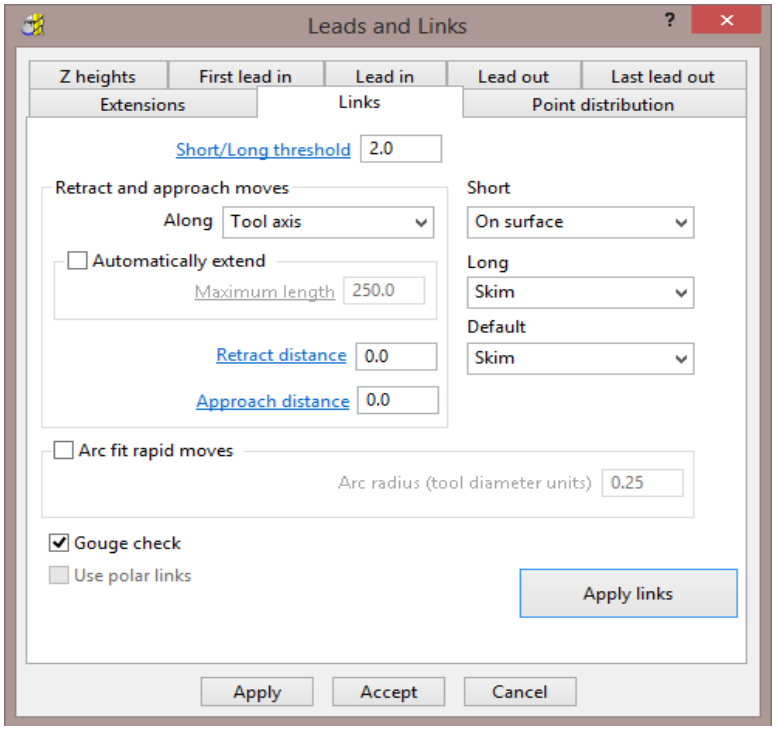

a Change the **Short/Long Threshold** to 2.

b Change the **Short links** to **On Surface**.

c Change the **Long** and **Default** links to **Skim**.

15 **Apply** and **Accept** the dialog.

16 Select **File - Save Project** to update (but do not close):-

.....\COURSEWORK\PowerMILL-Projects\Camera_Example

Steep and Shallow Finishing

This strategy includes the following additional options:-

The option to input a **Threshold Angle** to control the extent of the **Constant Z** and **3D Offset** areas of the toolpath.

The option to input a **steep shallow overlap** value between the **Constant Z** and **3D Offset** areas.

1 From the **main** toolbar, select **Toolpath Strategies** and from **Finishing** open a **Steep and Shallow Finishing** strategy.

2 Enter the values exactly as shown:

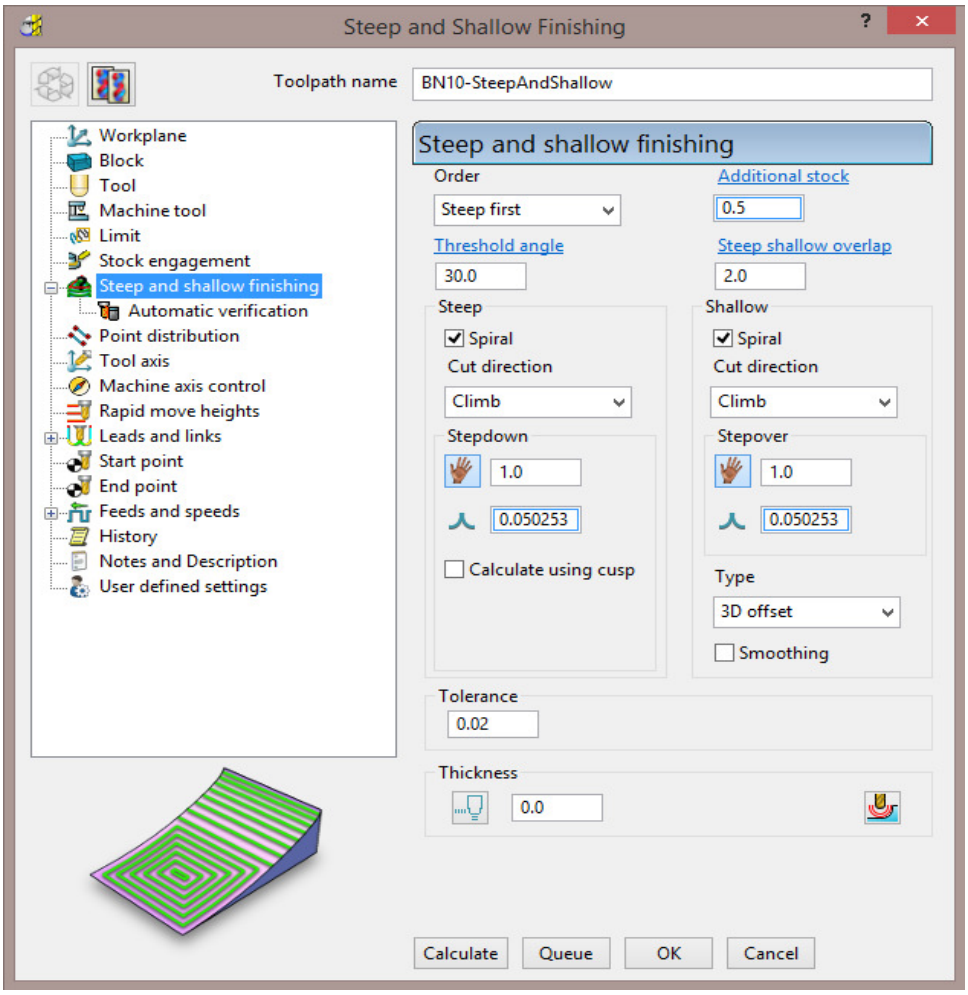

a Enter **Toolpath name** as **BN10-SteepAndShallow**.

b For the ***Order*** select **Steep first**.

c For the **Threshold angle** input **30**.

d ***Tick*** both of the **Spiral** boxes.

e For both the **Stepdown** and **Stepover** input **1**.

f For **Type** (shallow) select **3D offset**.

g ***Tick*** the **Smoothing** box.

3 Select **Calculate** to process the toolpath and then **Close** the dialog.

 Copyright © Delcam Ltd

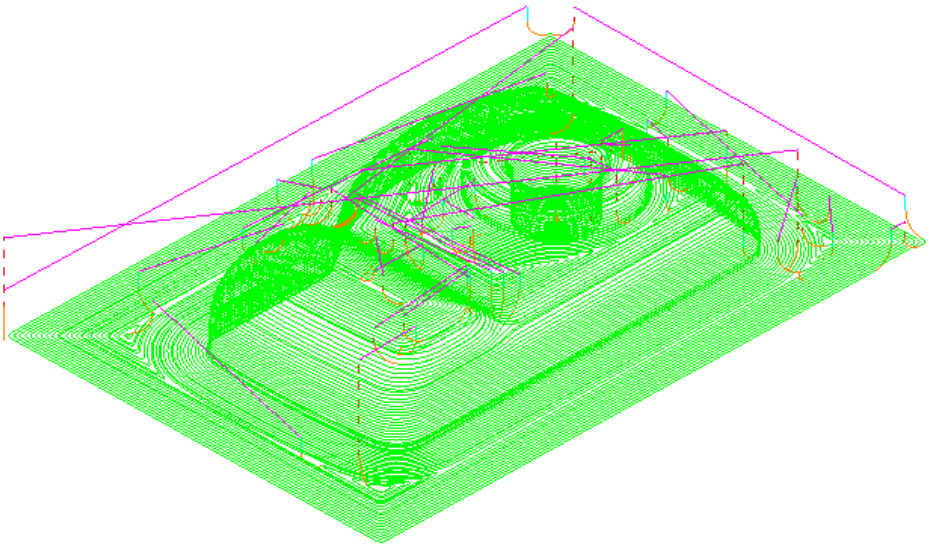

4 Select **File** - **Save Project** to update:-

.....\COURSEWORK\PowerMILL-Projects\Camera_Example

Steep and Shallow finishing with separate Shallow Stepover

Both **Optimised Constant Z** and **Steep and Shallow** strategies have an option to apply a separate, larger **Stepover** across shallow areas. This option is designed to enable a more efficient machining of shallow areas with a **Tip Radiused** tool.

The main advantage with the **Steep and Shallow** strategy is that the **Threshold Angle** is user defined. This can be set to **0** making the large stepover apply over flat areas only.

1 **Delete All** and **Reset Forms**.

2 Select **File** - **Open Project** and in the dialog browse to:

.....\PowerMILL_Data\Projects\ADV-SteepShallow-Start

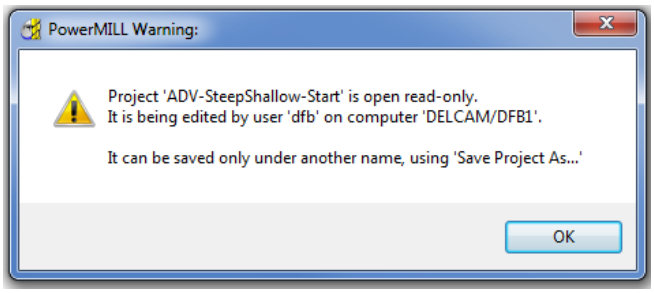

3 Click **OK** to load the read-only **Project** into **PowerMILL**.

4 **Save Project As**:

.....\COURSEWORK\PowerMILL_Projects\ADV-SteepShallow-EX1

5 In the **PowerMILL *explorer***, right-click on the existing toolpath **D16t3-SteepShallow-FIN** and select **Settings**.

The component form includes 2 flat areas which are currently finished with the same small **stepover** as the angled walls. For more efficiency, an option is available for a larger stepover to be independently applied to the shallow flat areas.

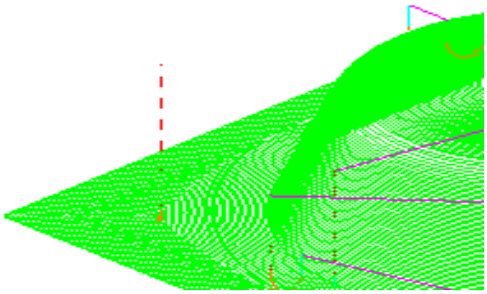

6 Click ***Recycle*** to enable edits to the existing toolpath.

7 Update the main page of the dialog exactly as shown below.

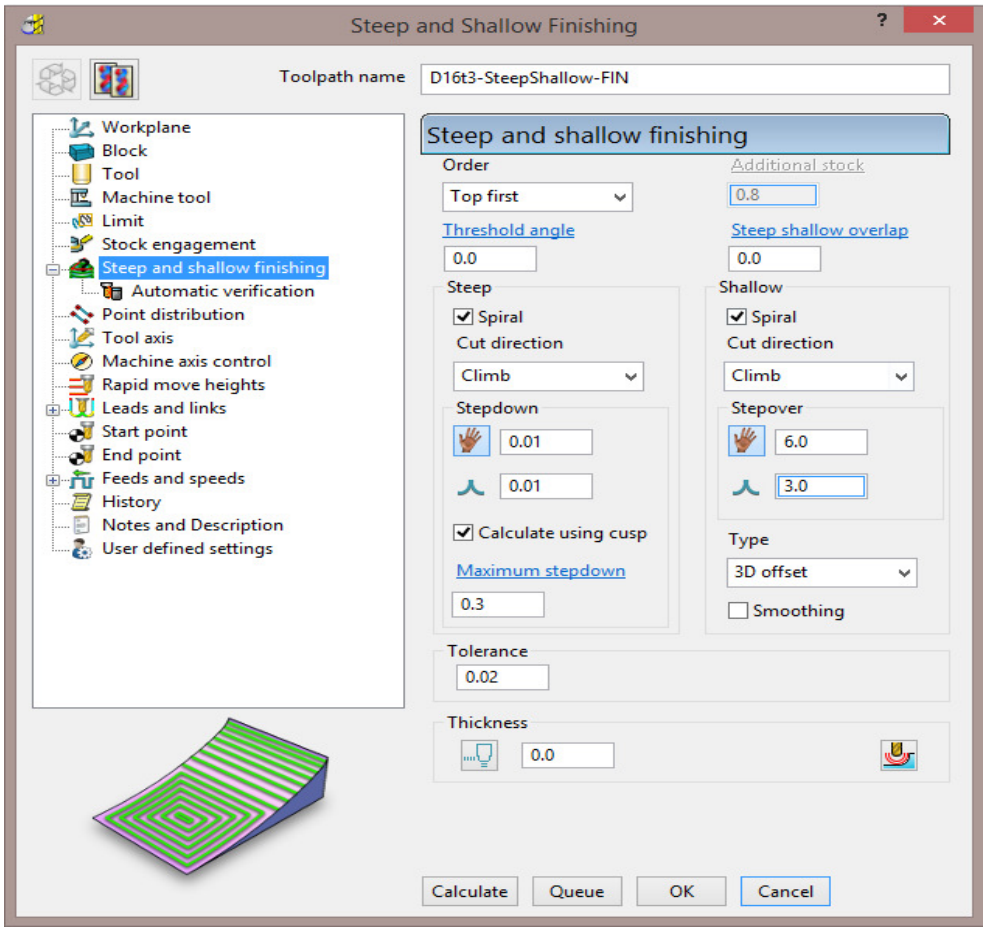

a Select ***Order*** as **Steep first**.

b Input the ***Threshold angle*** as **0**

c ***Tick*** the **Calculate using cusp** box and input 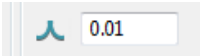

.

d Input a **Stepdown** of **0.01** and a ***Maximum stepdown*** of **0.3**

e For the shallow regions, enter a **Stepover** of **6**

 Copyright © Delcam Ltd

8 Click **Calculate** to process the toolpath and then **Close** the dialog.

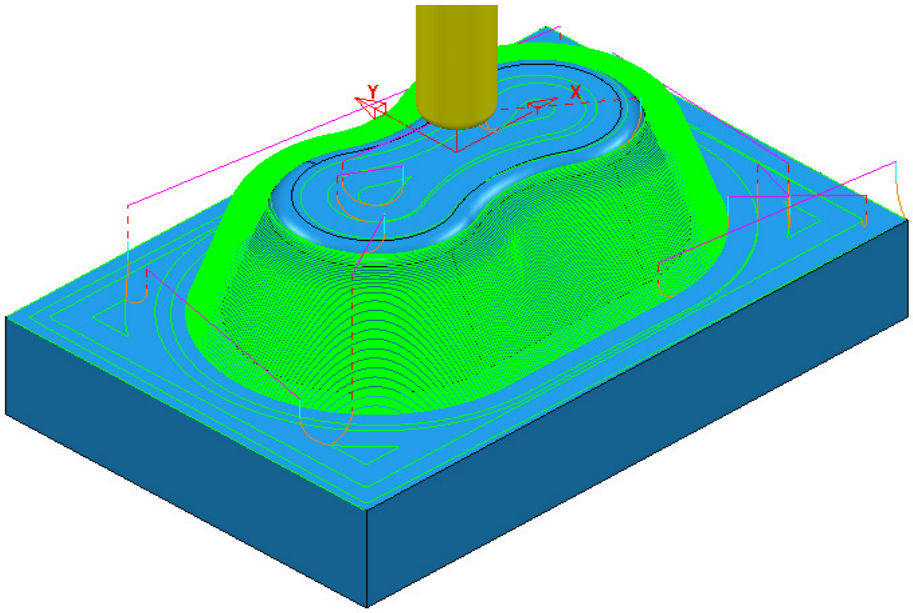

The ***flat areas*** are machined more efficiently using a large **stepover** while the ***steep areas*** use a small, variable **stepdown** based on the **cusp height**. This provides an efficiently produced, consistent finish over the whole form.

9 Run a **ViewMILL simulation** on both the ***Roughing*** and ***Finishing*** toolpaths.

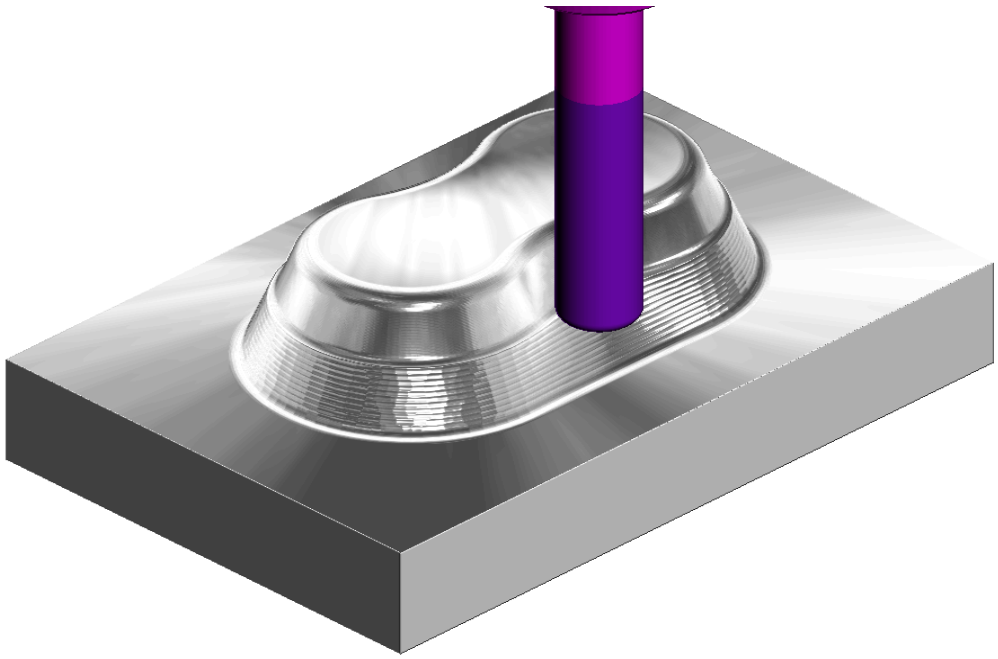

10 Select **File - Save Project**, to update:-

.....\COURSEWORK\PowerMILL_Projects\ADV-SteepShallow-EX1

Corner Finishing

Corner Finishing strategies identify and remove material in corners that are inaccessible to previously used, larger tools. There are 3 independent types of strategy: **Along**, **Stitch**, and **Automatic**.

All **Corner Finishing** strategies include a **Threshold Angle** option. This is the angle down from the horizontal, where the *steep* and ***shallow*** portions meet.

The **Threshold Angle** can be defined to prevent the tool running up or down steep slopes. For example, you could apply a **Stitch** strategy to track across the ***steep*** areas, while using the **Along** strategy in ***shallow*** areas.

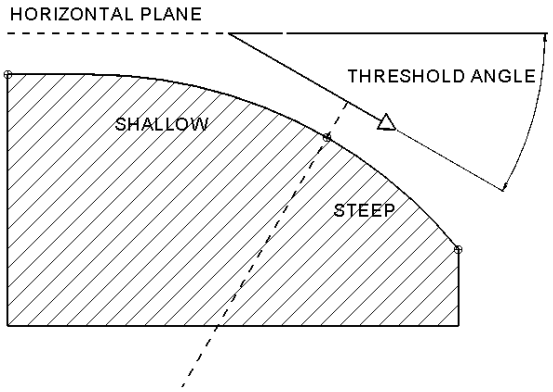

*If the **Threshold Angle** is **90** then the **Steep** area will not exist.*

The **Corner Finishing** and **Multi-Pencil** strategies machine the areas that are inaccessible to the Reference tool (2) but are accessible to the active tool, as in the diagram.

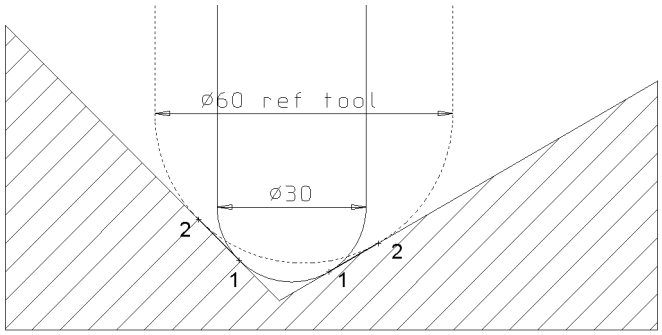

In the following example, the **Corner Finishing** strategy uses a Dia 10 Ball Nose for the reference tool, and a diameter Dia 5 Ball-nose to perform the rest machining.

1. Select **File - Delete All** and **Tools** - **Reset Forms**.
2. From the **Main** menu, Select **File - Open Project** and select:

   .....\PowerMILL_Data\Projects\CornerFinish_start

3. From the **Main** menu, select **File - Save Project As**:

   .....\COURSEWORK\PowerMILL-Projects\CornerFinish

 Copyright © Delcam Ltd

Corner Along Finishing

4 Select an **ISO2** view.

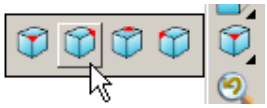

5 **Activate** the **toolpath**, **D16T3-rghA1** to restore the settings.

6 Create a Dia 5 ball nose tool named **BN5**.

7 From the **main** toolbar, select **Toolpath Strategies** and from **Finishing** open a **Corner Finishing** strategy.

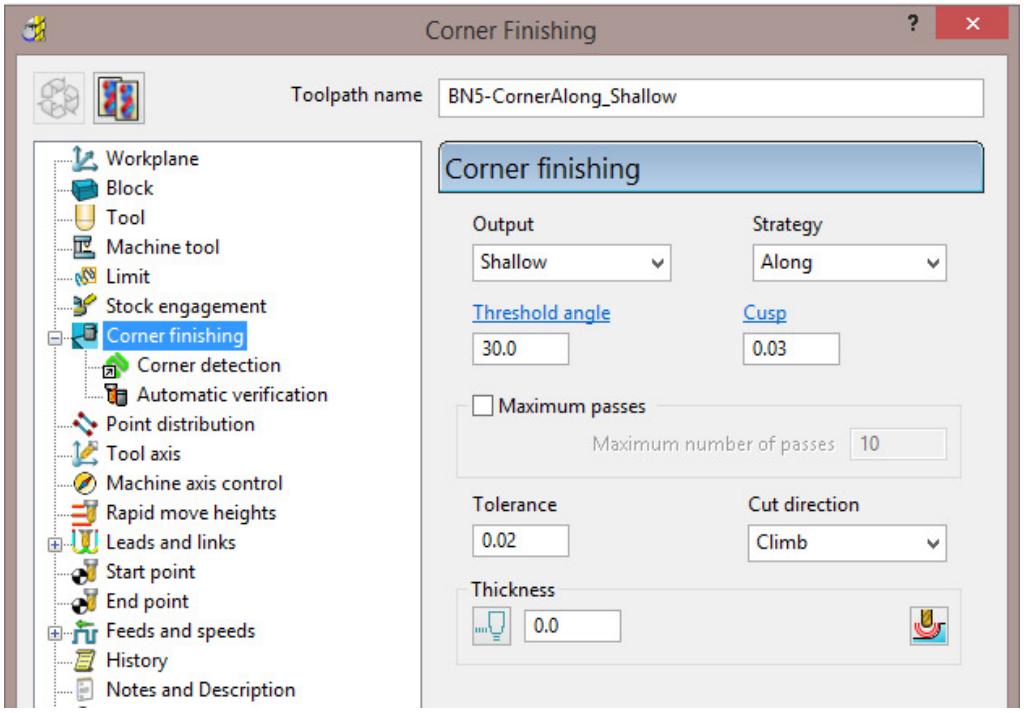

a Enter **Toolpath** name as **BN5-CornerAlong_Shallow**.

b Change **Output** to **Shallow** and **Strategy** to **Along**.

c Set **Cusp** to **0.03**

d Set **Cut direction** to **Climb**.

e On the **Tool** page, check that the **BN5** tool is ***Active***.

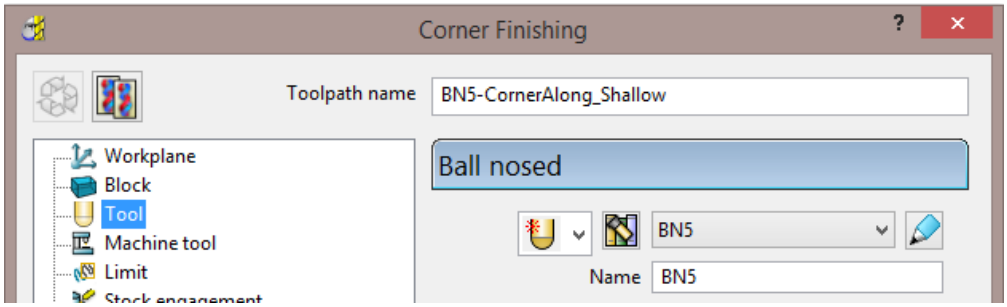

f Select the **Corner** detection page and select the **Reference tool** as **BN10**.

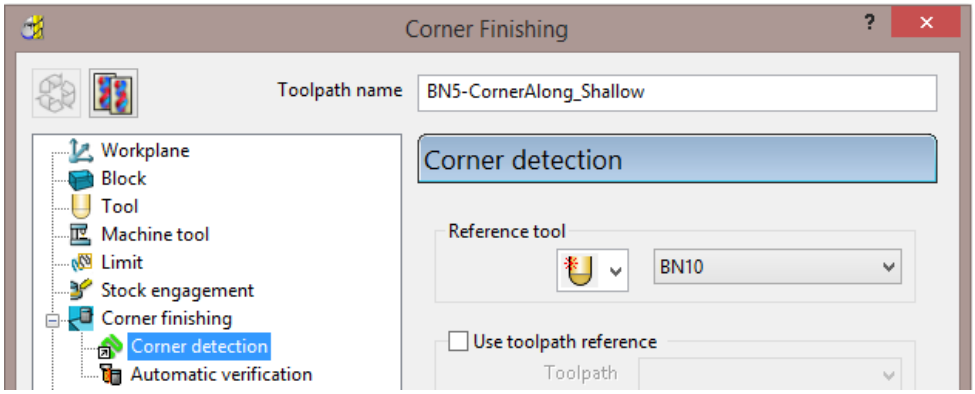

8 Select the **Lead in** page and set the ***1st Choice*** to **None**.

9 **Calculate** to process the toolpath and then **Close** the dialog.

10 **Simulate** the toolpath and observe the order of the machining:

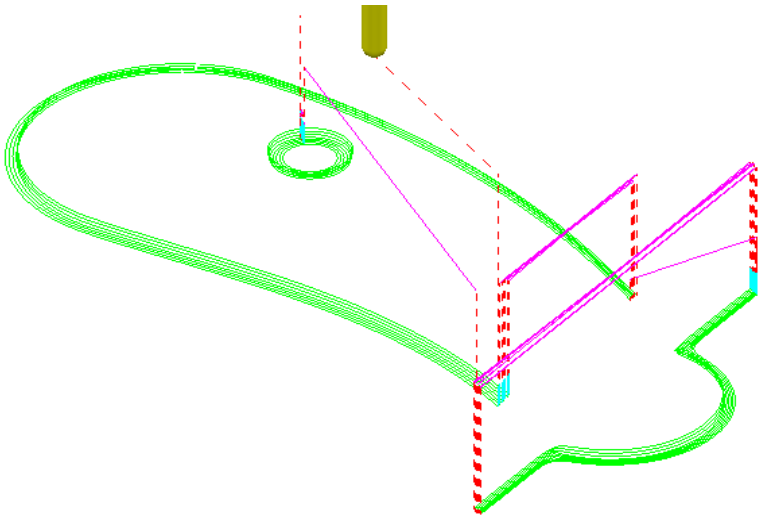

Note: With **Output** set to **Shallow**, the toolpath has stayed within the shallow areas of the model (between horizontal and a downward angle of 30 Degrees).

*If a **Threshold angle** of **90** is used, the **Shallow** option will apply to all valid rest areas. In this case the **Steep** option is non-existent.*

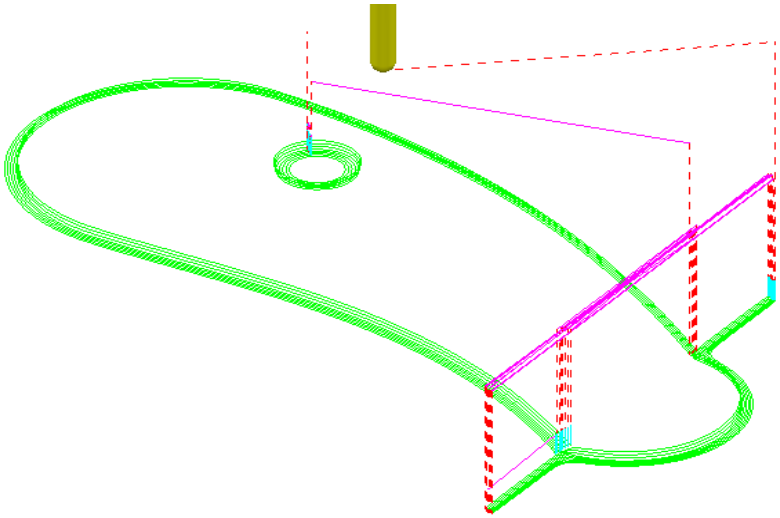

 Copyright © Delcam Ltd

Corner Stitch Finishing

1 From the **main** toolbar, select **Toolpath Strategies** and from **Finishing** open a **Corner Finishing** strategy.

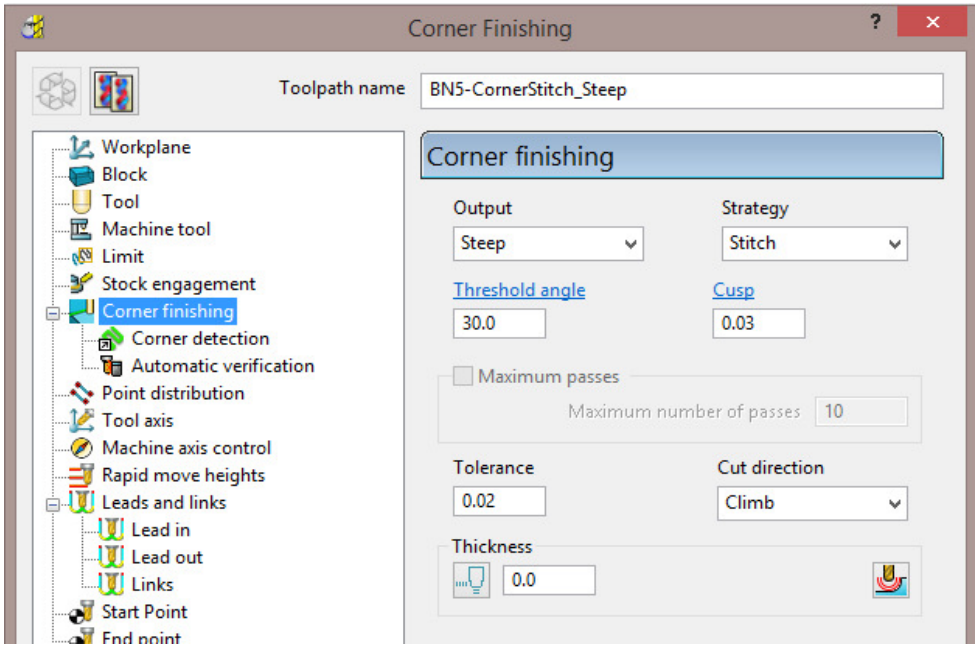

a Enter **Toolpath name** as **BN5-CornerStitch_Steep**.

b Change ***Output*** to **Steep** and ***Strategy*** to **Stitch**.

c Check that the **BN5** tool is active on the **Tool** page.

d Check that the **Reference tool** is **BN10** on the **Corner detection** page.

2 **Calculate** to process the toolpath and then **Close** the dialog.

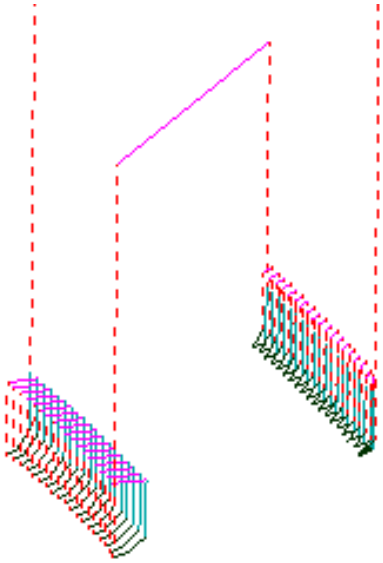

This time, only the steep areas are machined.

3 From the **Main** menu select **File > Save Project** to update:-

.....\COURSEWORK\Projects\CornerFinish

Corner Automatic Finishing

1 From the **main** toolbar, select **Toolpath Strategies** and from **Finishing** open a **Corner Finishing** strategy.

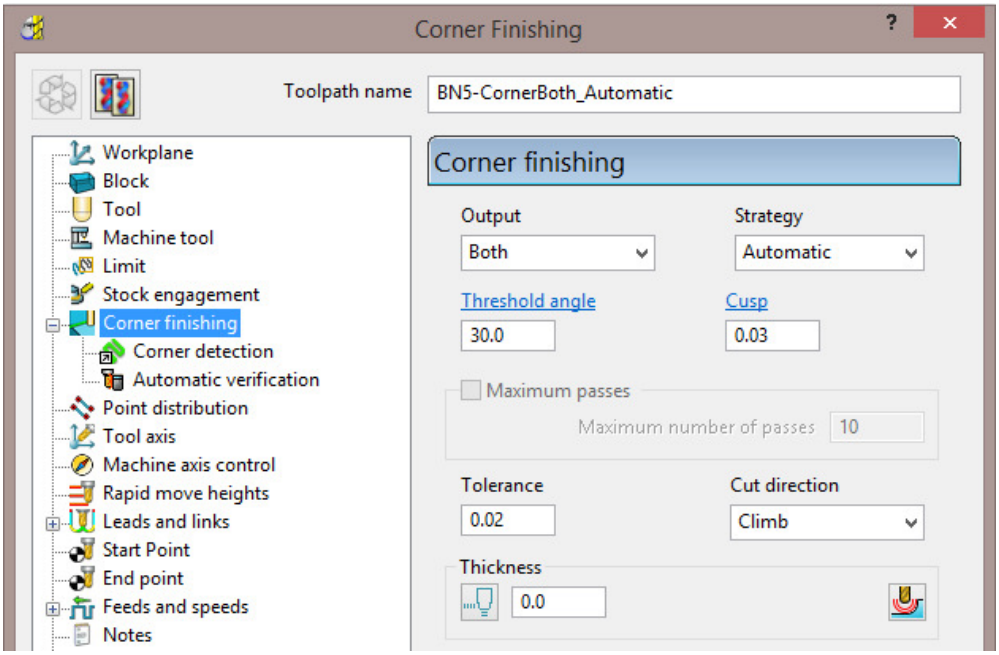

a Enter **Toolpath name** as **BN5-CornerBoth_Automatic**.

b Use **Strategy** - **Automatic**.

c Change **Output** to **Both**.

d Change the **Threshold** angle back to **30.0**

2 Click **Calculate** to process the toolpath and then **Close** the dialog.

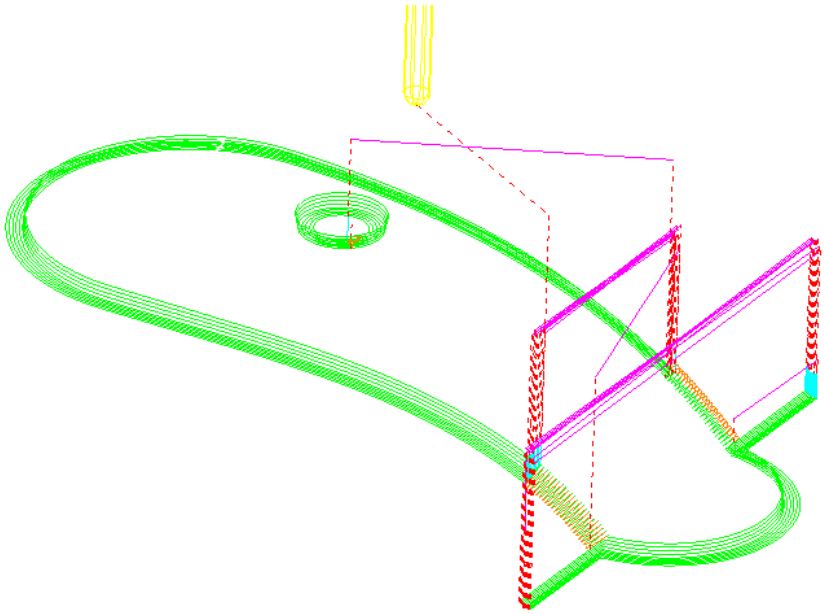

This strategy automatically uses **Along** for the **Shallow** areas and **Stitch** for the **Steep** areas.

 Copyright © Delcam Ltd

Corner Pencil Finishing

Corner Pencil Finishing creates a single toolpath along the actual intersection between non-tangential faces on the model.

1 From the **main** toolbar, select **Toolpath Strategies** and from **Finishing** open a **Corner Pencil Finishing** strategy.

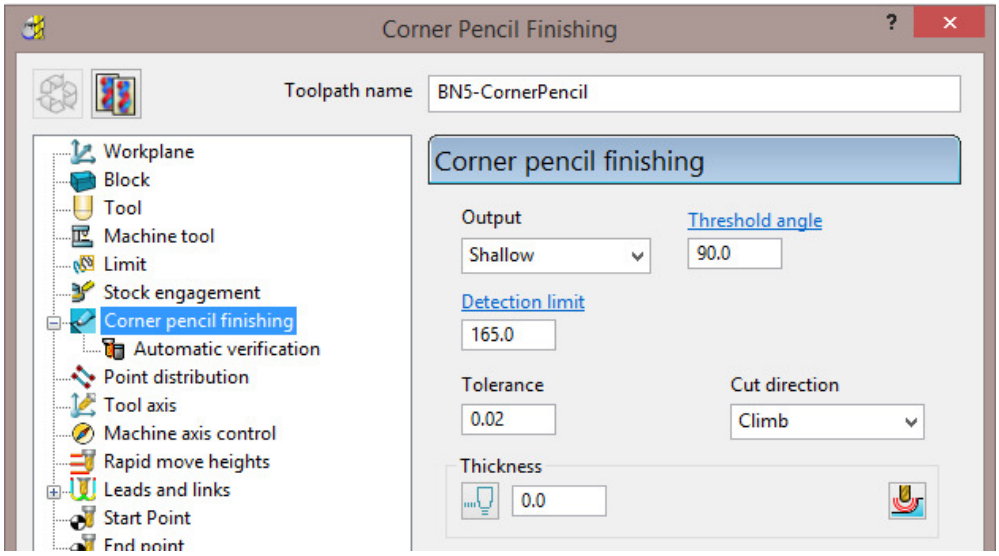

a Enter **Toolpath name** as **BN5-CornerPencil**.

b Change **Output** to **Shallow**.

c Change the **Threshold Angle** to 90

*Note: With a **Threshold Angle** of **90** the **Steep** angle will not exist, so only **Output** with **Shallow** or **Both** selected will enable a toolpath to be created.*

d On the **Tool** page, make the **BN5** tool active.

2 Select **Calculate** to process the toolpath, and then **Close** the dialog.

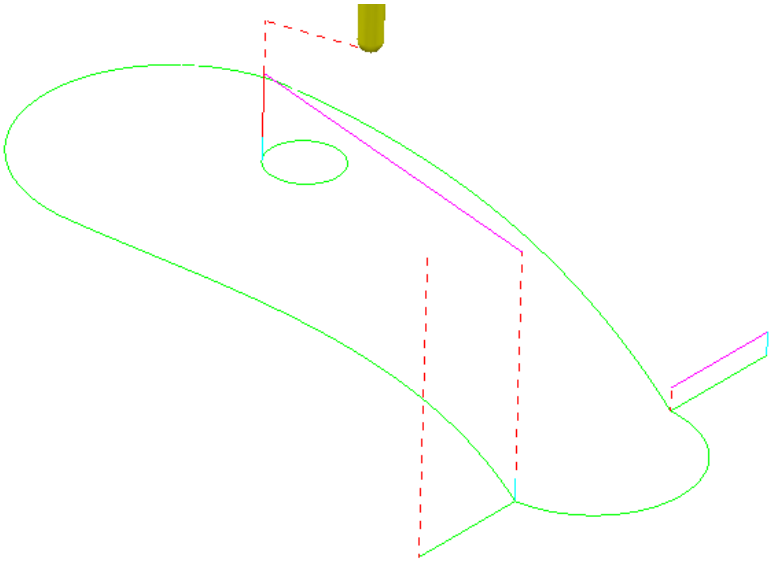

Corner Multi-pencil Finishing

Corner Multi-Pencil Finishing creates a multi-track, rest finishing, toolpath based on the **Pencil Finishing** strategy. On creation it visually looks similar to a **Corner Finishing** toolpath, but on closer inspection there are subtle differences to the toolpath order and that it includes tool tracks along the model intersections.

1 From the **main** toolbar, select **Toolpath Strategies** and from **Finishing** open a **Multi-Pencil Finishing** strategy.

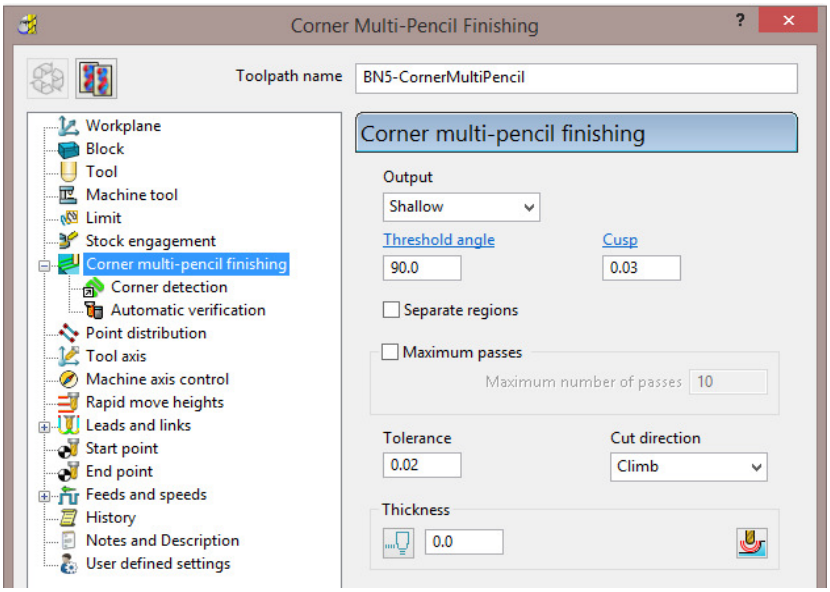

e Enter **Toolpath name** as **BN5-CornerMultiPencil**.

f Change **Output** to **Both**.

g Change the **Threshold Angle** to **90**

h On the **Tool** page, make the **BN5** tool active.

i In the **Corner detection** page check that **BN10** is selected.

2 **Calculate** to process the toolpath and then **Close** the dialog.

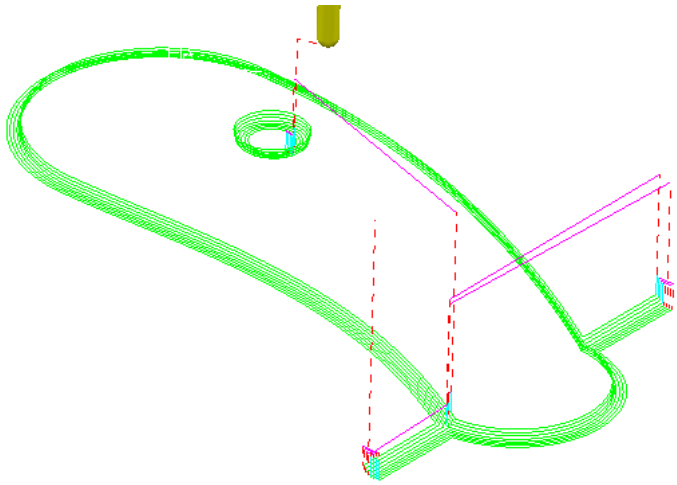

3 From the **Main** menu select **File > Save Project** to update:-

.....\COURSEWORK\Projects\CornerFinish

 Copyright © Delcam Ltd

Flat Finishing

These strategies apply to purely flat surfaces only. Flat areas within a variable height surface are not recognised. The minor discrepancies in the flatness of a surface is controlled by a **Flat Tolerance** value.

1. **Delete All** and **Reset Forms**.
2. From the **Main** menu, select **File - Open Project**:

   .....\PowerMILL_Data\Projects\FlatFinish_Start
3. Select **File - Save Project As**:

   .....\COURSEWORK\PowerMILL-Projects\FlatFinish-Example1

Offset Flat Finishing

1. In the **PowerMILL *explorer***, **Activate** the ***Toolpath*** **D16TR3-RGH1**.
2. **Activate** the Dia 16 End Mill (**EM16**) **Tool**.
3. **De-Activate *Boundary* 1**.
4. From the **main** toolbar, select **Toolpath Strategies** and from **Finishing** open an **Offset Flat Finishing** strategy.

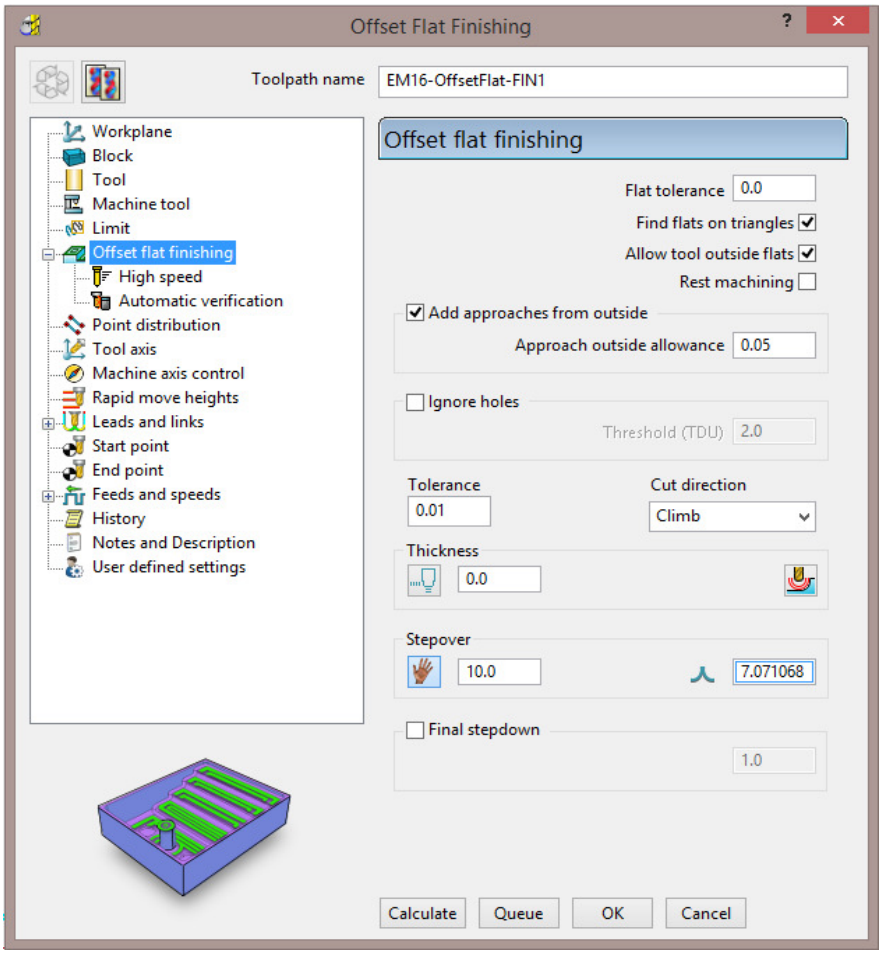

5. Select **Calculate** and when completed, **Close** the dialog.

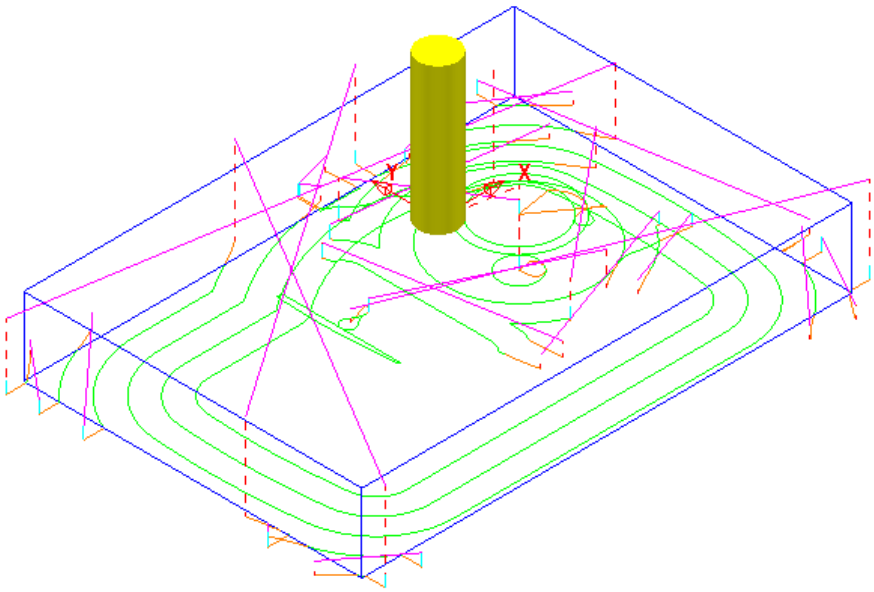

The imported **Project** contains both an **Offset Area Clear** roughing strategy and an **Optimised Constant Z** finishing strategy. It is recommended that **Offset Flats** (**EM16-OffsetFlats-FIN1**) is run directly after the **3D Area Clearance** (**D16t3-RGH1**). For this reason, it would make good sense to move it up the toolpath order in the **PowerMILL** ***explorer***.

1 In the **PowerMILL** ***explorer***, hold the left mouse key down on the toolpath **EM16-OffsetFlats-FIN1** while dragging and releasing it onto **D16TR3-RGH1**.

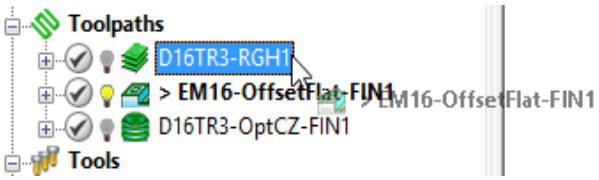

2 Perform a **ViewMILL** simulation on all 3 toolpaths to check that the **Toolpath** order is acceptable.

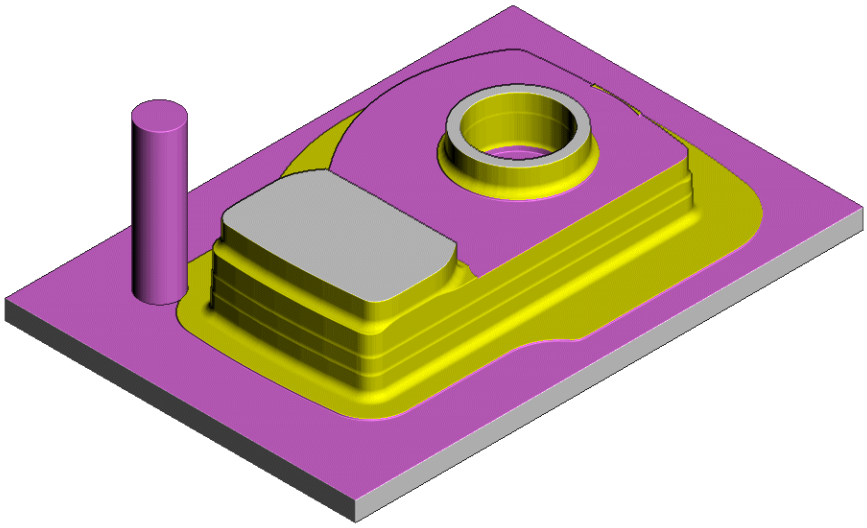

The **ViewMILL** simulation after the **Offset Flat Finishing** strategy is shown above.

 Copyright © Delcam Ltd

Raster Flat Finishing

1 From the **main** toolbar, select **Toolpath Strategies** and from **Finishing** open a **Raster Flat Finishing** strategy.

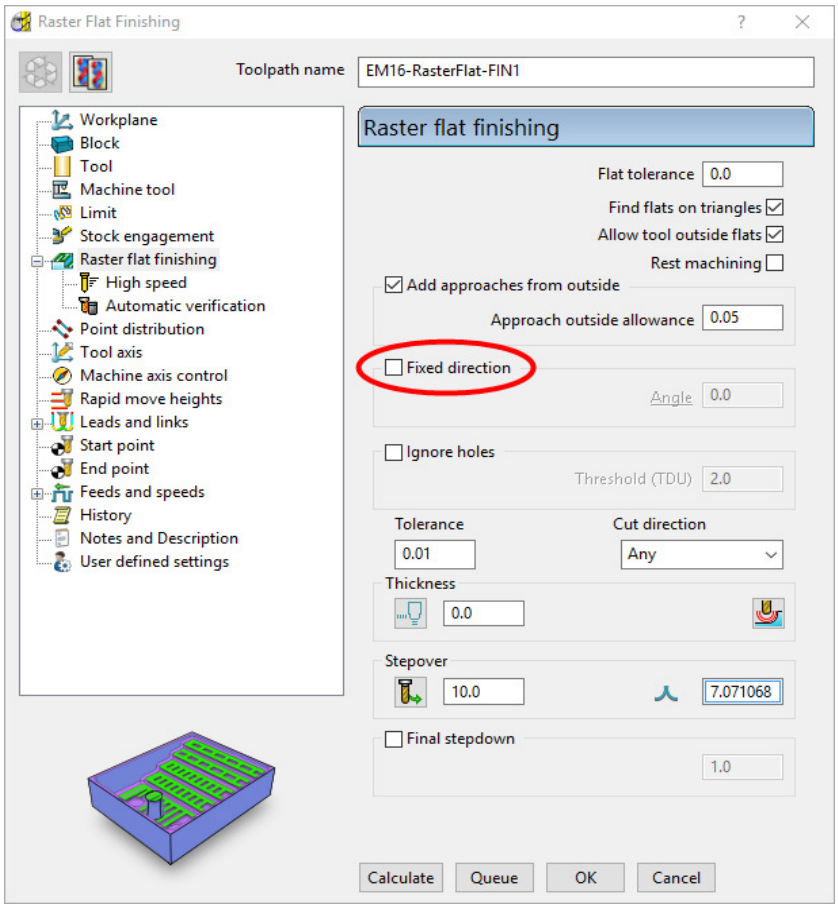

2 Select **Calculate** and when completed, **Close** the dialog.

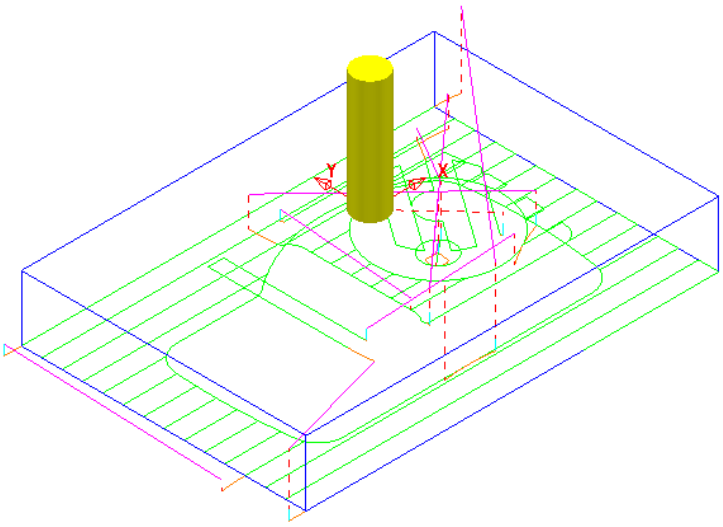

3 From the **Main** menu select **File > Save Project** to update:-

.....\COURSEWORK\PowerMILL-Projects\FlatFinish-Example1

Flat Machining example

1 Select **File** - **Delete All** and **Tools** - **Reset Forms**.

2 Select **File** - **Import Model**:-

.....\PowerMILL_Data\Models\Flats.dgk

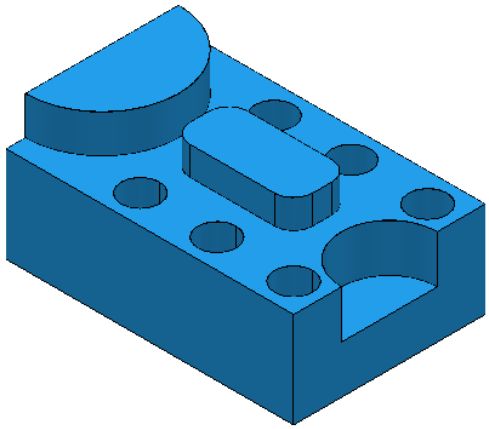

3 **Save** the **Project** as:-

.....\COURSEWORK\PowerMILL_Projects\FlatFinishing-Example2

4 Create a **20mm** diameter **End Mill** tool named **EM20**.

5 **Calculate** the (default) **Block** and then reset the **Rapid Move Heights**.

6 Open an **Offset Flat Finishing** strategy and:-

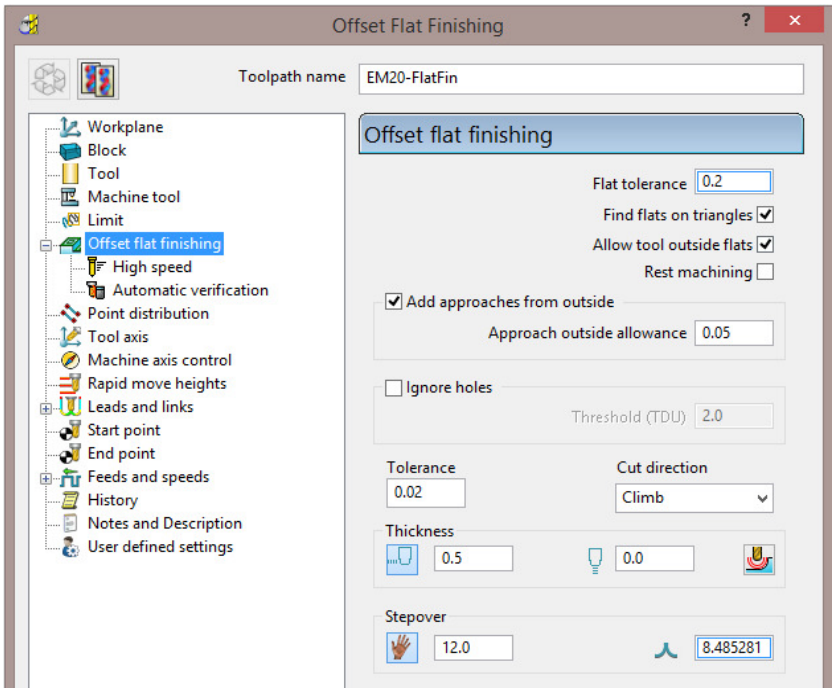

a Name the toolpath **EM20-FlatFin**.

b ***Untick*** the **Rest machining** box.

c Click the use **Axial Thickness** button and enter separate **Thickness** values for **Radial 0.5** and **Axial 0**

d **Calculate** to process the toolpath and then **Close** the dialog.

 Copyright © Delcam Ltd

Most of the **Flat** areas are finish machined, apart from the gap between the Upstands and inside the holes due to the **20mm** diameter tool being too large. We will now use a smaller tool to **Rest** machine these areas.

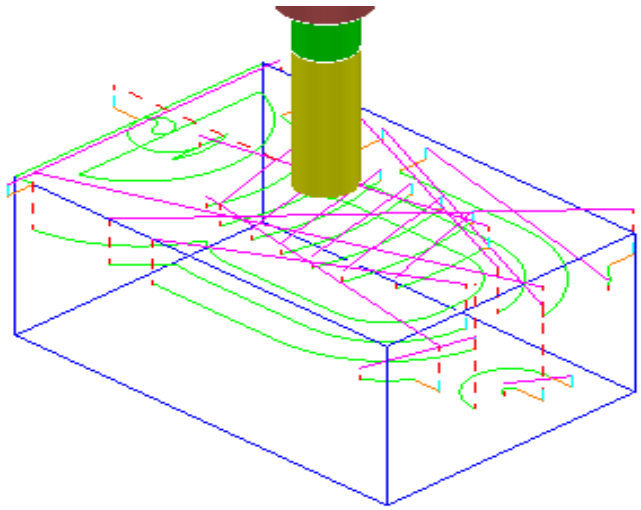

7 Create a **Dia 10 End Mill**, named **EM10**.

8 **Activate** the **Toolpath**, **EM20-FlatFin** and then select **Settings**.

1 Click to create a copy of the strategy.

2 In the main **Offset flat finishing** page of the strategy dialog:

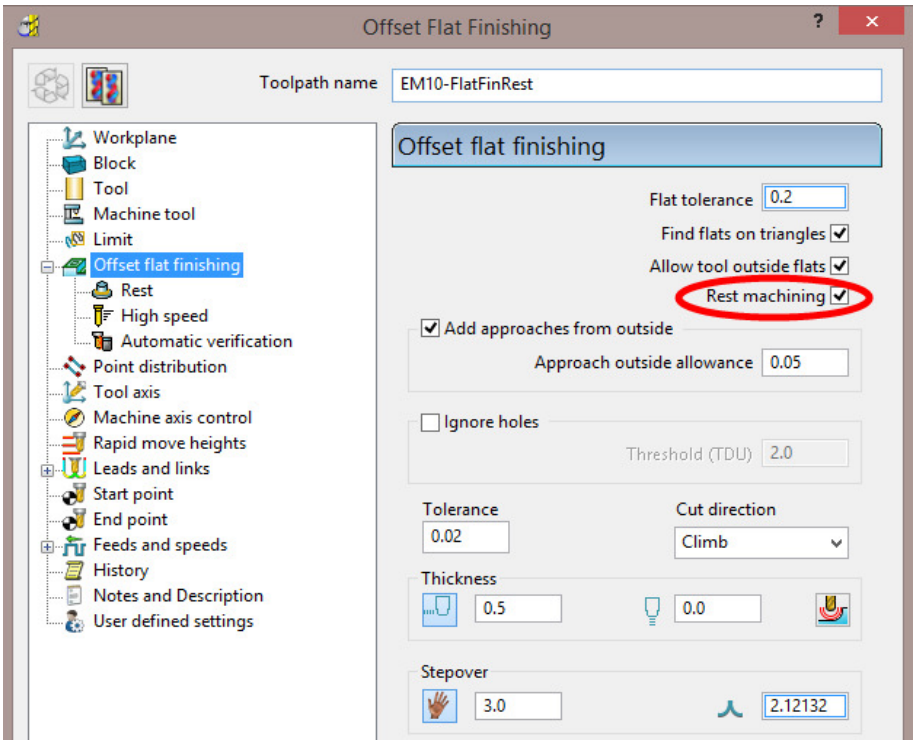

a Enter **Toolpath name** as **EM10-FlatFinRest**.

b Enter **Stepover** as **3.0**

c **Activate** the **EM10** tool.

d ***Tick*** the **Rest machining** box and then select the **Rest** page.

e On the **Rest** page, select the reference **Toolpath** as **EM20-FlatFin**.

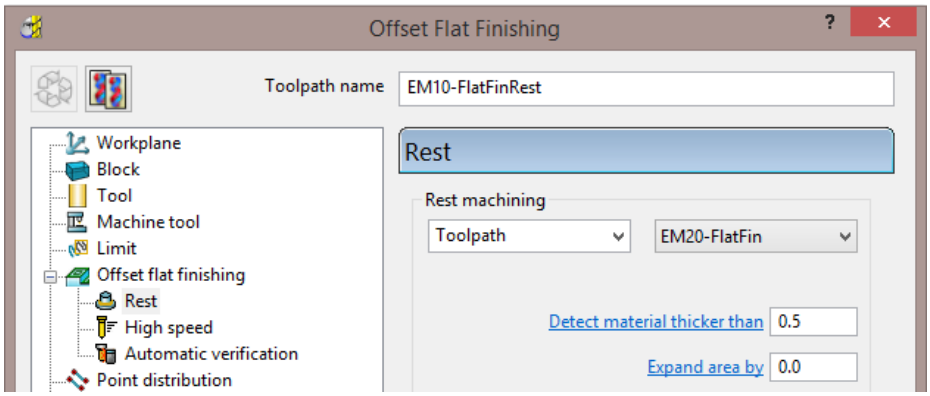

3 **Calculate** the toolpath and when created, **Close** the dialog.

The final finishing passes at the base of the holes and the area behind the boss are now created:

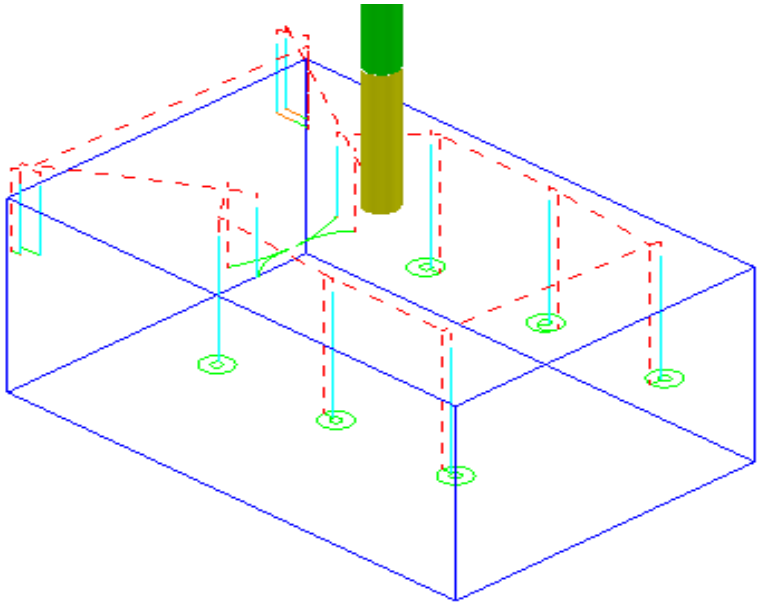

4 From the **Main** menu select **File > Save Project** to update:-

.....\COURSEWORK\FlatFinishing-Example2

 Copyright © Delcam Ltd

Surface Finishing Example 1

The **Surface Finishing** strategy creates tool tracks that follow the natural, ***surface curves*** on a single, selected, **Surface**.

The tool tracks in a Surface Finishing strategy will not run parallel to the edges of a trimmed, surface.

1 From the **Main** menu, select **File - Delete All** and **Tools** - **Reset Forms**.

2 **Open** the read-only **Project**:-

.....\PowerMILL_Data\Projects\EditToolpaths_3

3 From the **Main** menu , select **File - Save Project As**:

.....\COURSEWORK\PowerMILL-Projects\PunchForm_3

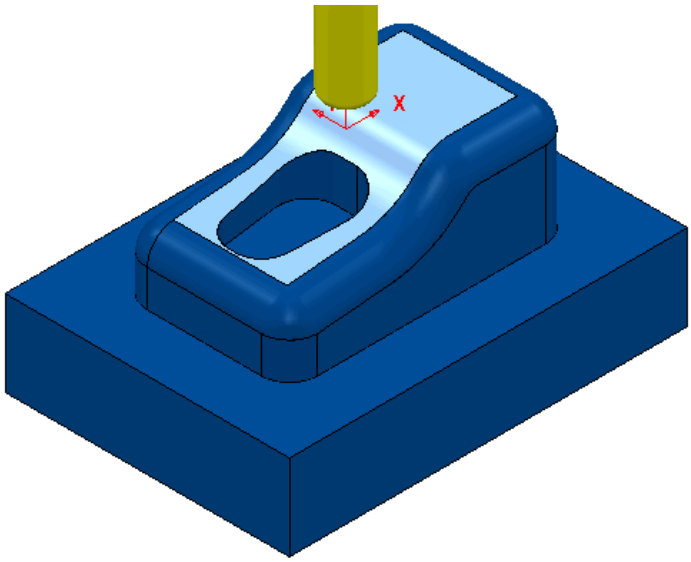

4 **Activate** the **toolpath D10TR1-FIN1** to reinstate all the original settings.

All you need from the original settings is the original; **Active Workplane**, **Block**, **Rapid Move Heights,** and the ***Tiprad tool*** named **D10TR1**.

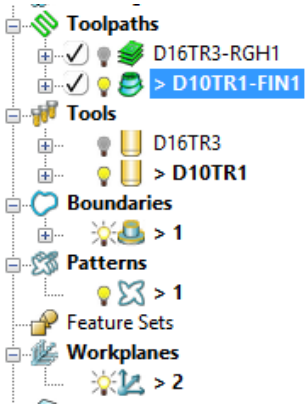

5 De-Activate both the ***Toolpath*** **D10TR1-FIN1**, and ***Boundary*** **1**.

6 Select the ***upper surface*** on the punch model (as displayed above).

7 Open a **Surface Finishing** strategy and enter values as shown below.

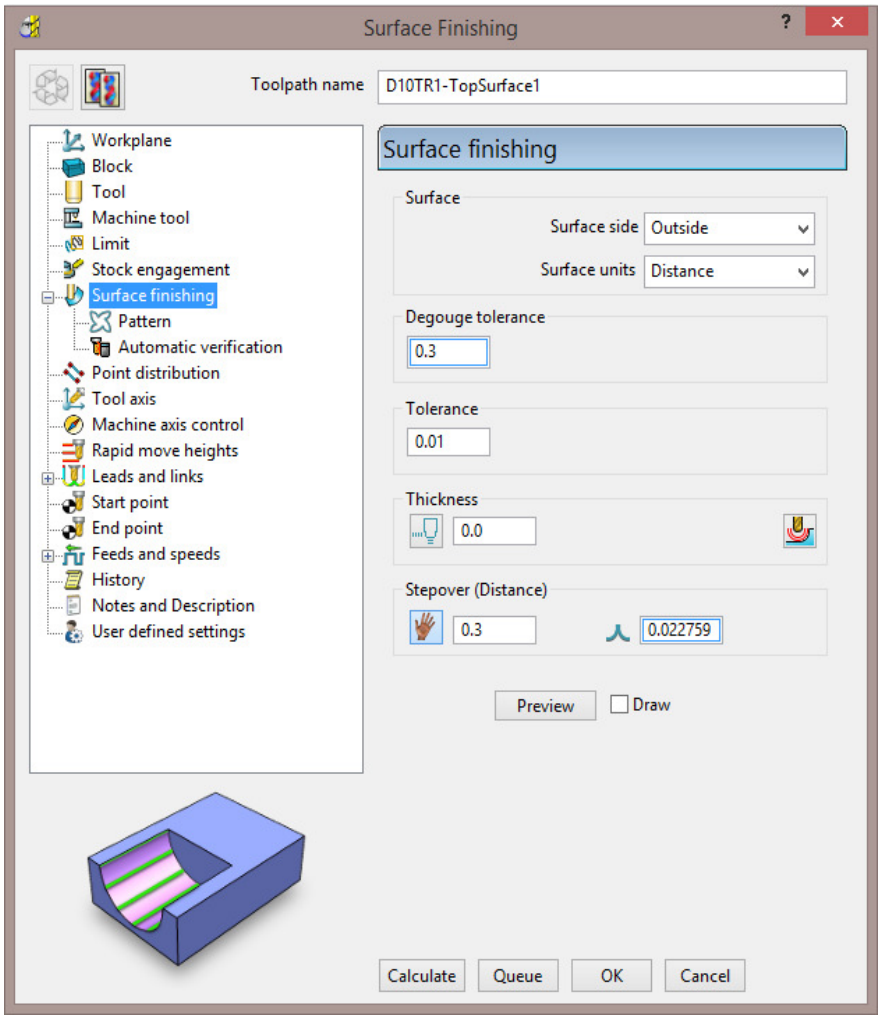

8 Select the **Pattern** page:

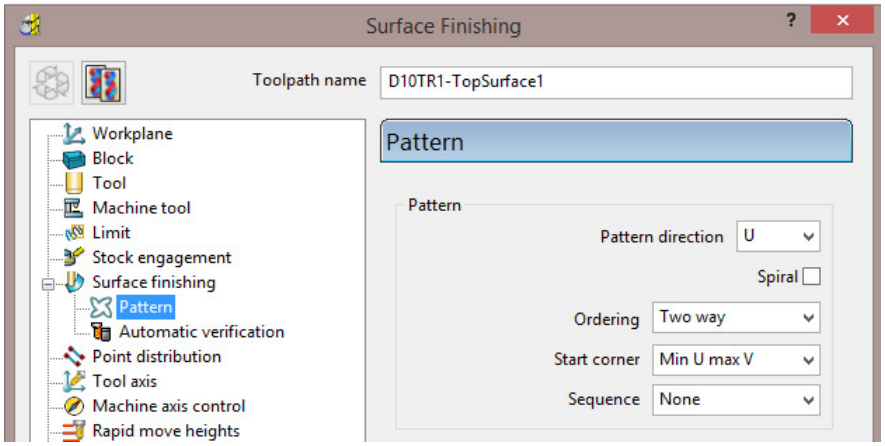

a Set **Pattern direction** – **U**

b Un-tick **Spiral**, and then select ***Ordering*** - **Two way**

c Select ***Start corner*** - **Min U max V**

9 Select the **Preview** tab to display the **Pattern** along its ***start point*** (arrow)

10 Select **Calculate** to create the toolpath and then **Close** the dialog.

 Copyright © Delcam Ltd

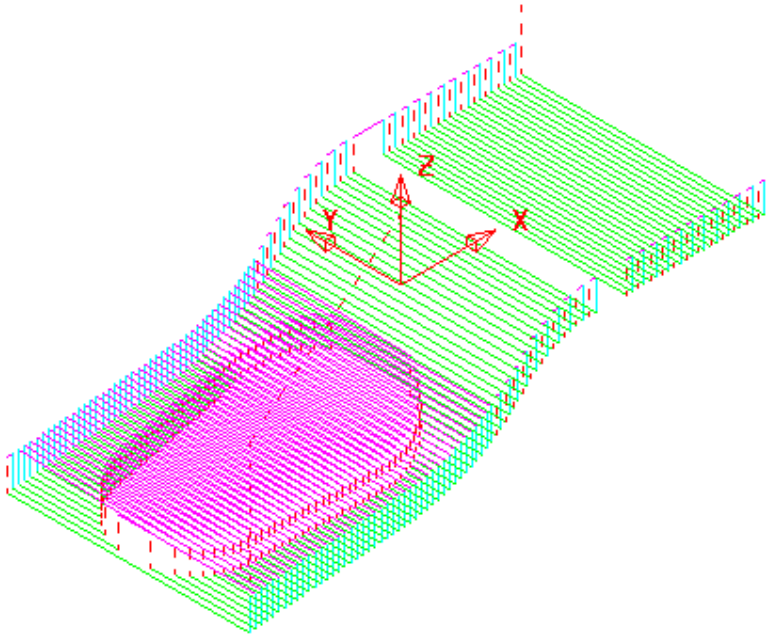

11 From the **Main** toolbar, click the **Leads and Links** button.

12 On the **Links** page:

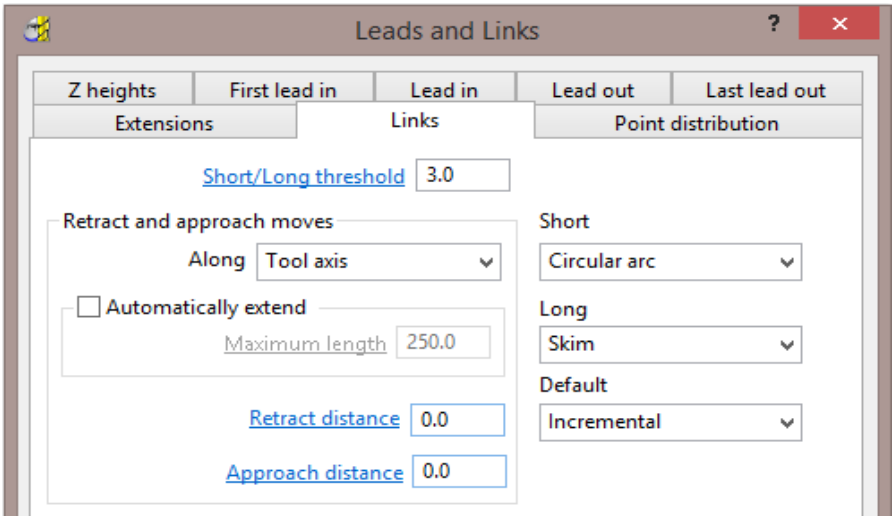

a Enter **Short/Long** – **Threshold 3.0**

b Select **Short** - **Circular Arc**

c Select **Long** - **Skim**

d Select **Default** – **Incremental**

13 **Apply** the dialog to update the ***active* toolpath**.

Where the **Link** move from the end of a tool track to the start of the next is within 3 mm, an (orange) arc move will be applied.

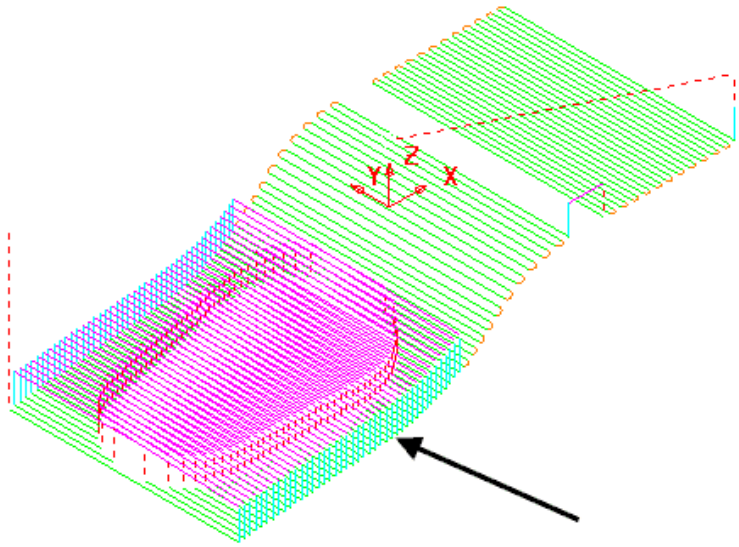

In the resultant toolpath, the natural order of the tool tracks and link moves across the 2 narrow areas is not very efficient.

This can be fixed by applying suitable ***toolpath***, **Edit - Reorder** options.

14 Right-click on the **toolpath** and from the local menu, select **Edit > Reorder**.

15 In the **Toolpath Listing** dialog, click the **Automatic reorder and reverse** button.

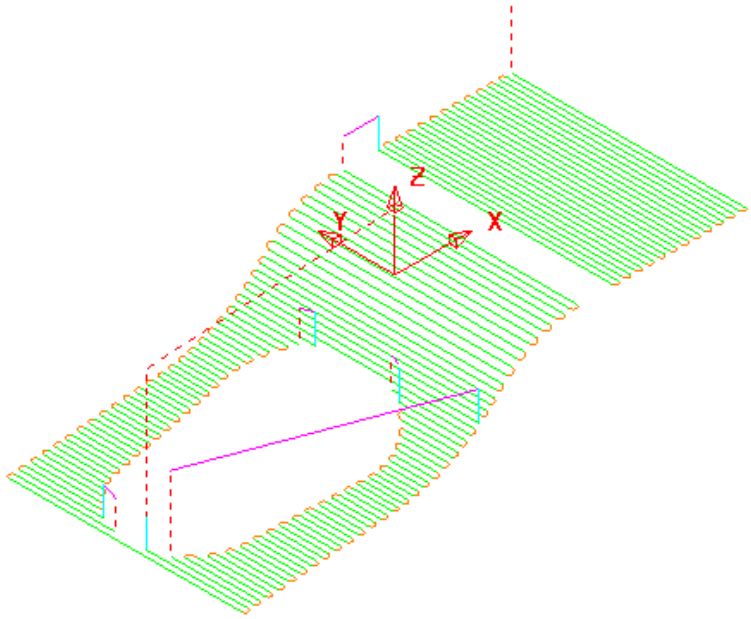

The toolpath follows the curves of the selected surface.

The illustrated toolpath is created with a **1 mm Stepover** to help with visualisation. It has also been edited using the **Automatic Reorder and Reverse** option to eliminate as many air moves as possible.

To further improve the efficiency of this strategy, several of the tool tracks on the upper flat area can be deleted to take advantage of using a bigger **Stepover** for the **Dia 10 mm** flat area of the active **Tool**.

 Copyright © Delcam Ltd

1 From the **Main** menu, select **Draw > Cursor > Tool** to help with the visualisation for the next action.

2 Using the ***Shift key*** and ***left mouse key*** select groups tool tracks leaving a single pass within the tool diameter range, outside each set as shown below:

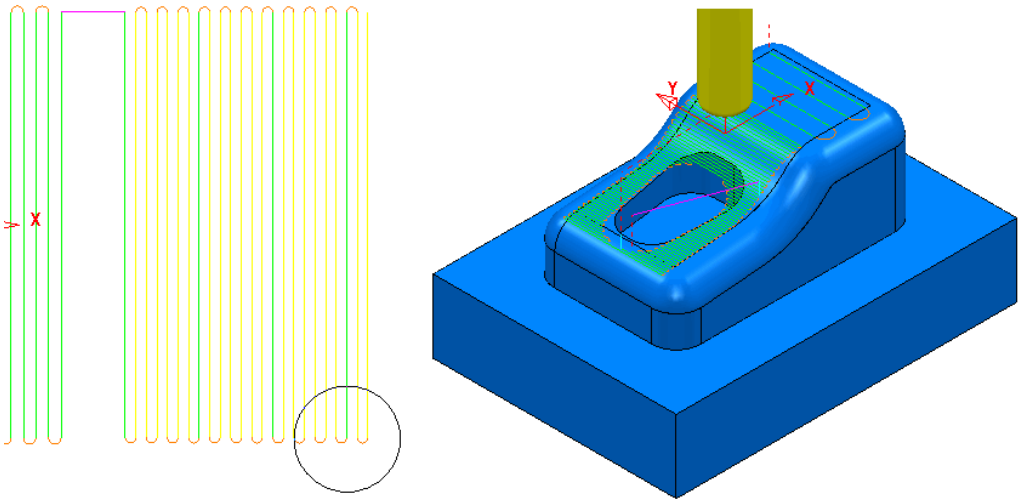

The **Tool** outline is displayed above to visualise suitable **Stepover** (**Draw > Cursor > Tool**).

*If it is necessary to de-select tool tracks form the current selection use the **Ctrl Key** and **left mouse key**.*

3 Right-click the toolpath and select **Edit > Delete Selected Components** to remove the selected tool tracks.

4 In the **Leads and Links** dialog select the **Links** options and change the **Short/Long threshold** to **15** before selecting **Apply**.

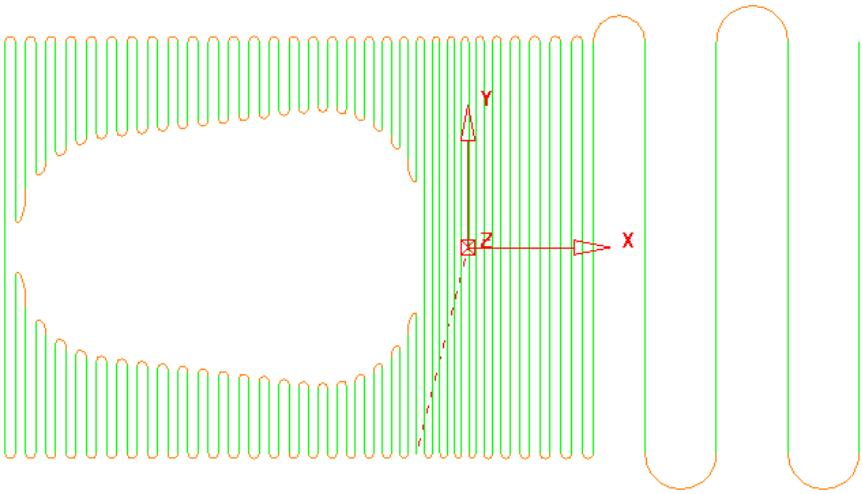

5 From the **Main** menu select **File > Save Project** to update:-

.....\COURSEWORK\PowerMILL-Projects\PunchForm_3

Toolpath Z-Limits

All **Toolpath** types, except drilling, can now be limited to applied maximum and minimum **Z** values within the defined **Block**.

1 From the main menus, select **File** – **Delete All** and **Tools** – **Reset Forms**.

2 **Open** the read-only **Project**:-

.....\PowerMILL_Data\Projects\Zlimits-Start

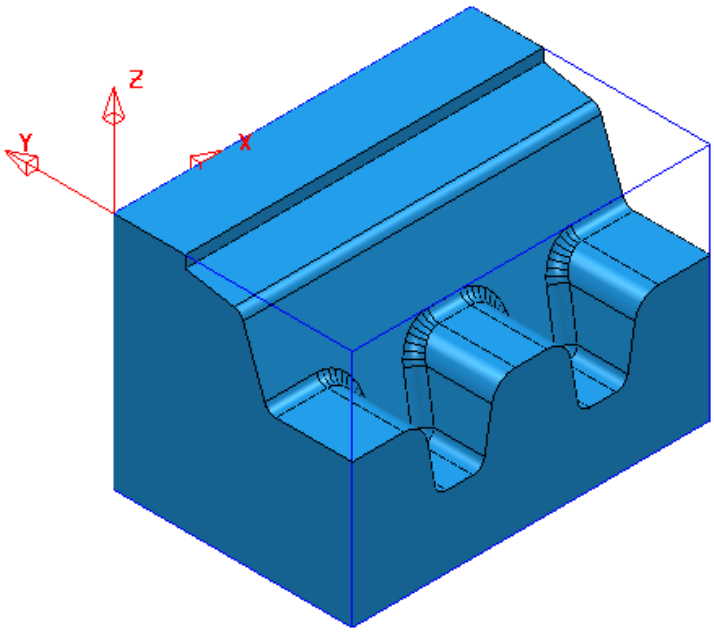

3 **Save Project As**:-

.....\COURSEWORK\Zlimits-EX1

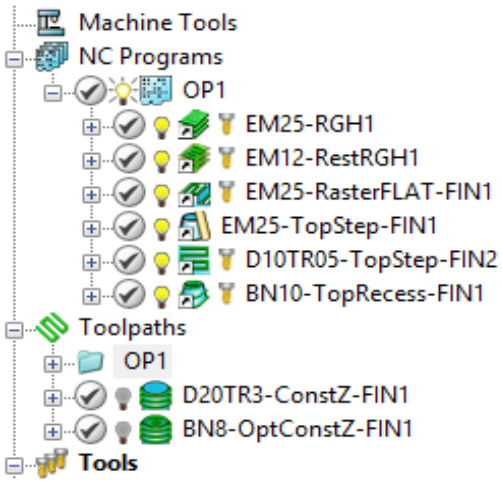

The **Project** already contains 8 **Toolpaths**, 6 of which have been put in a sub-folder named **OP1**. The 2 remaining **Toolpaths** require modification as they are both duplicating areas already included in other strategies. This will become evident during a ***ViewMILL* simulation**.

 Copyright © Delcam Ltd

4 **Activate** the toolpath **D20TR3-ConstantZ-FIN1** to reinstate the original **Block** and settings.

5 Run a ***ViewMILL* simulation** on the existing ***NC Program* OP1**.

6 Once completed save the **ViewMILL** model at this stage.

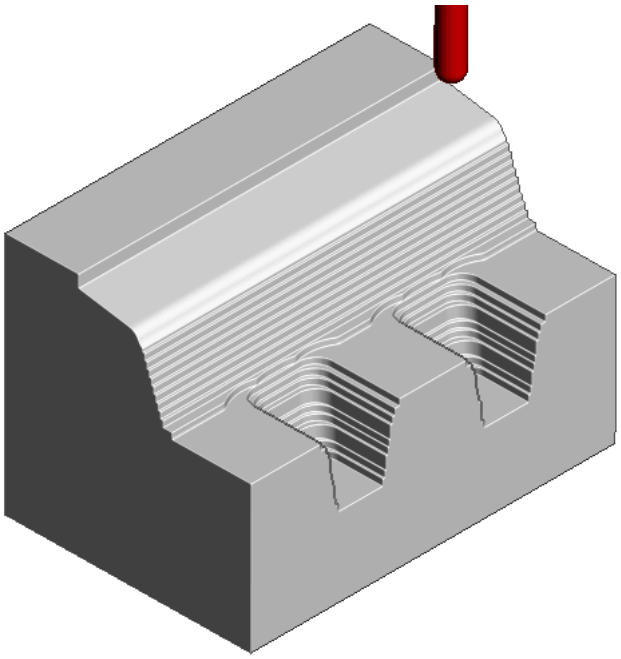

The ***angled face*** and ***lower recesses*** have yet to be finish machined. The 2 remaining toolpaths both operate over the full extent of the **Block**.

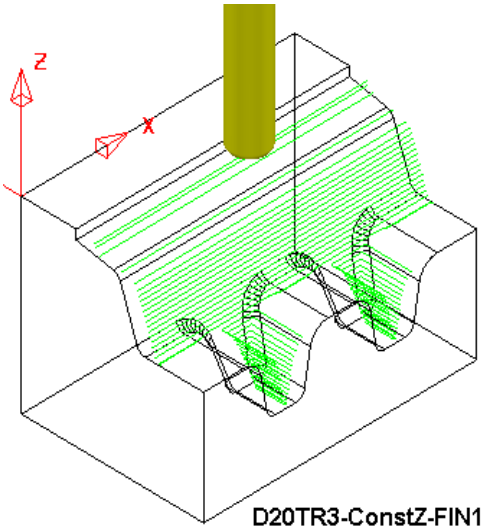

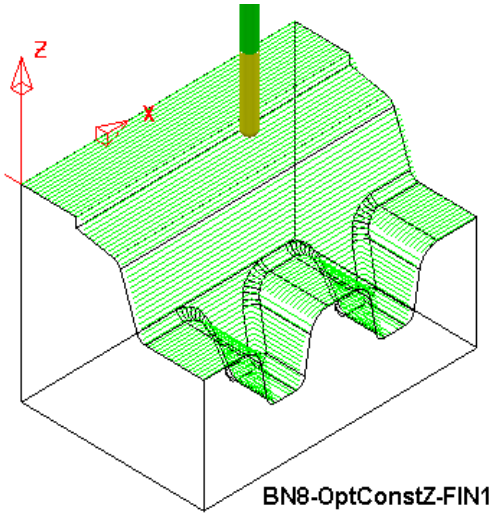

D20TR3-ConstZ-FIN1 needs to be localised to operate down the **angled face** to the top of the lower recesses.

BN8-OptConstZ-FIN1 needs to be localised to operate inside the 2 **lower recesses**.

This will easily be achieved for both toolpaths within the strategy dialog using the **Z-Limits** option.

7 Return to the **PowerMILL** (***No Image***) view and disconnect **ViewMILL** from the simulation (Switch the Green Sphere to Red).

8 In the **PowerMILL** ***explorer***, right mouse click on the toolpath **D20TR3-ConstZ-FIN1** and from the local menu, select **Activate** followed by **Settings** to open the strategy dialog.

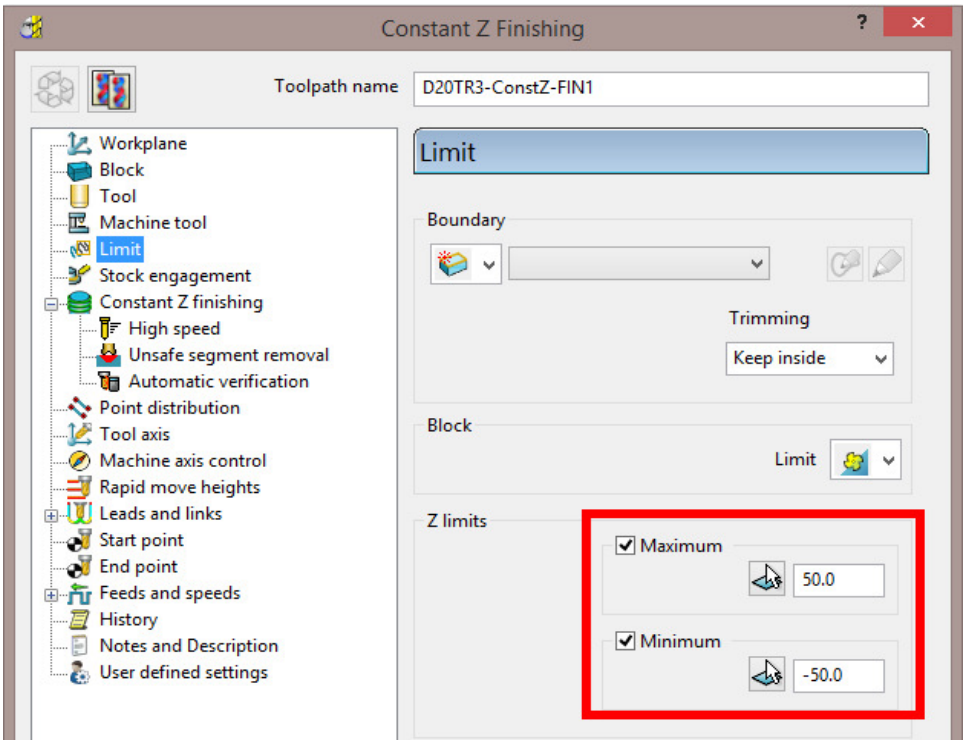

9 Select ***Recycle*** followed by the **Limit** page and ***tick*** both the **Maximum** and **Minimum** boxes.

10 For The **Maximum** select ***Pick the highest Z Value*** option.

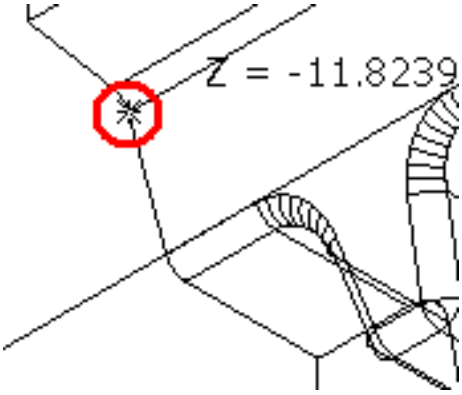

11 Snap the ***key-point*** (shown above) at the top corner of the angled face to collect and insert the value **-11.82394**.

12 For The **Minimum** select ***Pick the lowest Z Value*** option.

 Copyright © Delcam Ltd

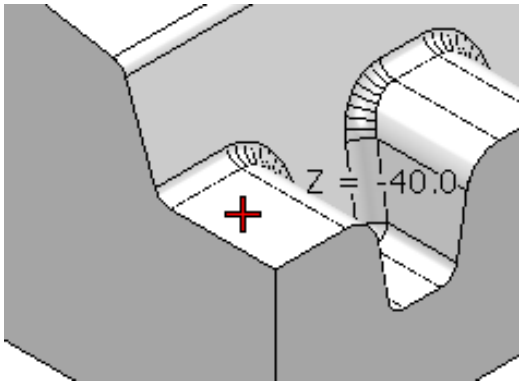

13 Snap the ***key-point*** (shown above) on the top of the flat area to collect and insert the value **-40**.

14 Back in the dialog select **Calculate** to re-process the updated **Constant Z** finishing strategy and then **Close** the dialog.

15 In the **PowerMILL *explorer*** Right mouse click on the toolpath **BN8-OptConstZ-FIN1** and from the local menu, select **Activate** followed by **Settings** to open the strategy dialog.

16 Select ***Recycle*** followed by the **Limit** page and this time ***tick*** just the **Maximum** box.

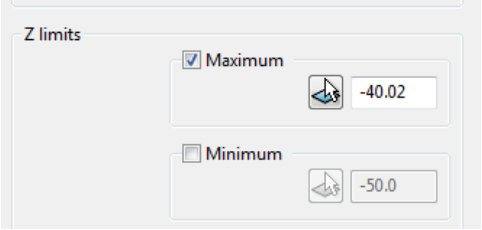

17 Input the value **-40.02** in the **Maximum** box.

18 Back in the main form select **Calculate** to re-process the updated **Optimised Constant Z** finishing strategy and then **Close** the dialog.

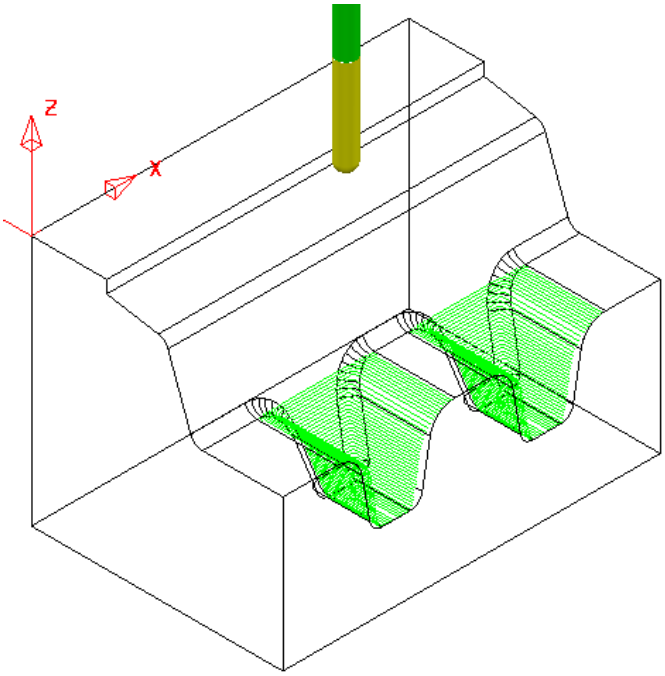

19 Re-connect **ViewMILL** and continue the existing simulation with the 2 updated toolpaths; **D20tR3-ConstZ-FIN1** followed by **BN8-OptConstZ-FIN1**.

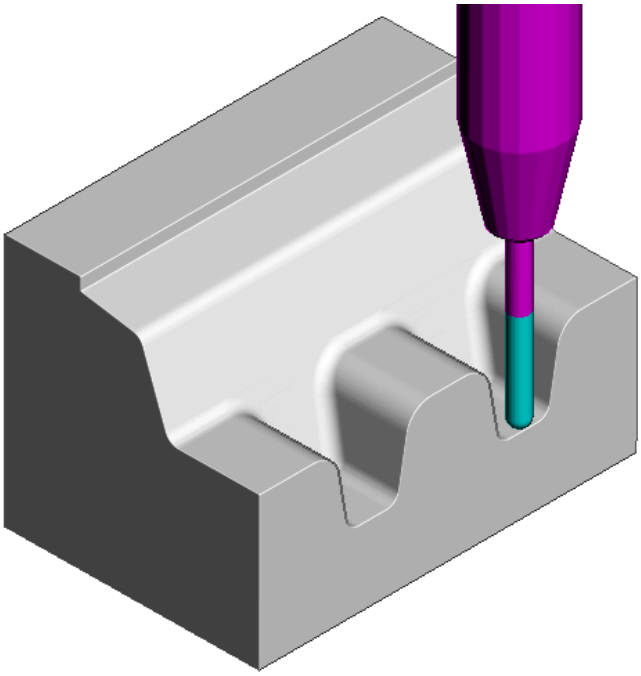

The Component is now fully machined.

20 Select **File** – **Save Project** to update:-

.....\COURSEWORK\PowerMILL_Projects\Zlimits-EX1

 Copyright © Delcam Ltd

Toolpath Processing Options

Calculate

When all the settings and values are input ready to create a toolpath, the **Calculate** button can be clicked to start the toolpath calculation process.

*You cannot use other **PowerMILL** options while the toolpaths are being calculated.*

Queue

If the **Queue** option is applied the user can continue working in **PowerMILL** while the toolpath is processed in the background. Several strategies can be put in the queue to be calculated in the background, in sequential order.

To **Queue** a toolpath for calculation, you can, either:

- Click the **Queue** button in a strategy dialog, or,
- Right-click on a toolpath and select **Queue** from the local menu.

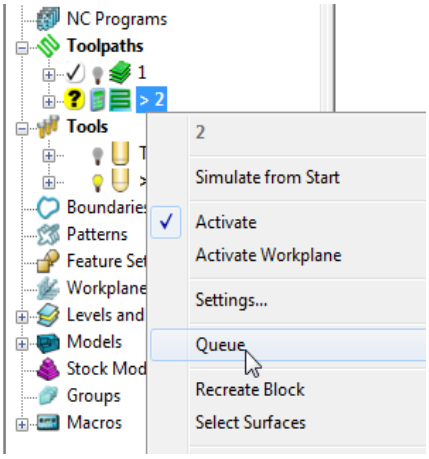

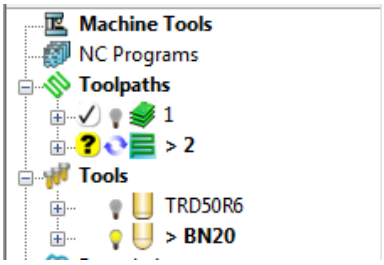

*The '**Calculator**' symbol changes to the '**Queue**' symbol when the toolpath is queued.*

Batch Process

Once all data has been entered into a strategy dialog, click the **OK** button to save the settings and close as an un-processed toolpath.

You can save one or more un-processed, machining strategies to be sequentially calculated at a later time.

To **Batch Process** toolpaths, right-click a toolpath and select **Batch Process**.

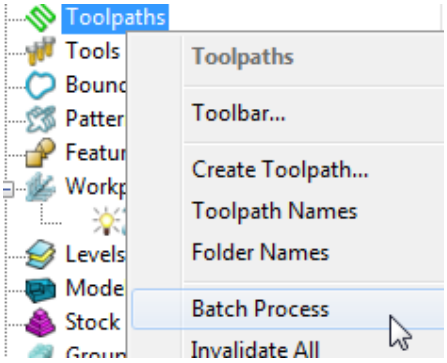

Toolpath Processing Queue

The **Toolpath** - **Queue** option allows you to continue working in **PowerMILL** while the toolpath is being processed in the background. One or more strategies can be added to the **Queue** and they are calculated in the background, in sequential order.

The following 'start up' **Project** contains two unprocessed toolpaths. The dialog for each one will be opened in turn, but **Queue** will be used instead of **Calculate**. This enables you to continue work on a new **Corner finishing - Along** strategy while the original toolpaths are processed in the background.

1 Select **File - Delete All** and **Tools - Reset Forms**.

2 Select **File – Open Project**:

.....\PowerMILL_Data\Projects\ToolpathProcessing-start

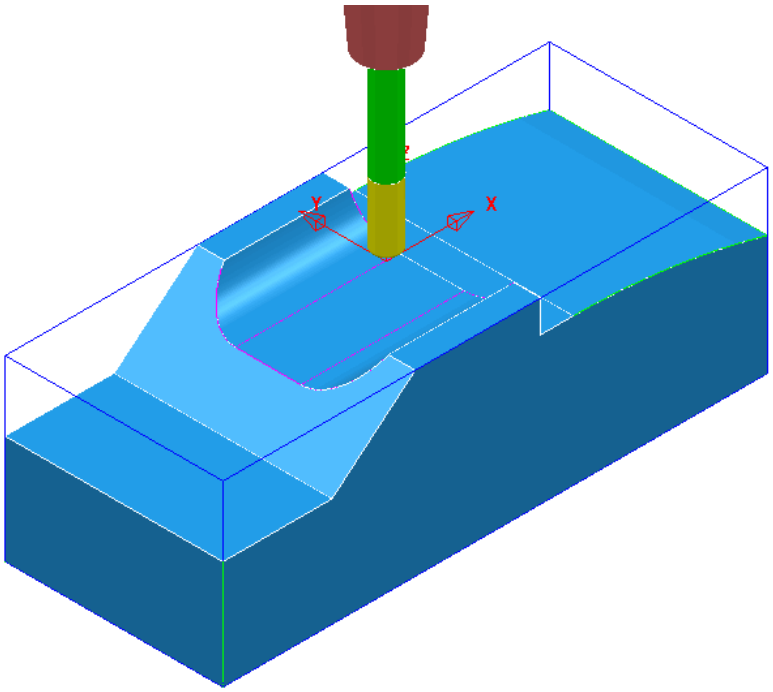

3 Select **File** - **Save Project As**:

.....\COURSEWORK\PowerMILL-Projects\ToolQueue-ex1

4 In the **PowerMILL** ***explorer***, right-click the **toolpath** named **D25t3-rgh** and select **Queue**.

5 Repeat this on the **Toolpath** named **BN16-fin1**.

 Copyright © Delcam Ltd

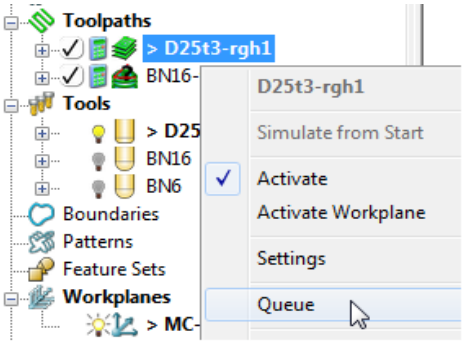

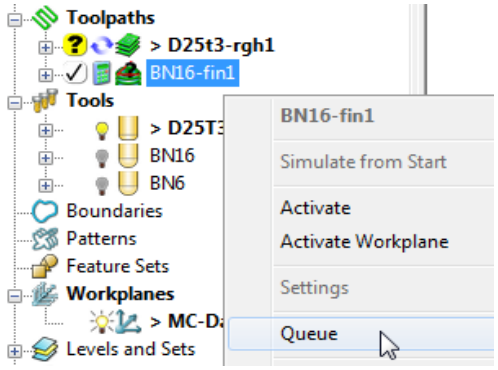

6 While the original toolpaths are being processed in the background, **Activate** the tool **BN6**.

7 Open a **Corner Finishing** strategy and set the ***Strategy*** to **Along**. Enter the other values exactly as shown below.

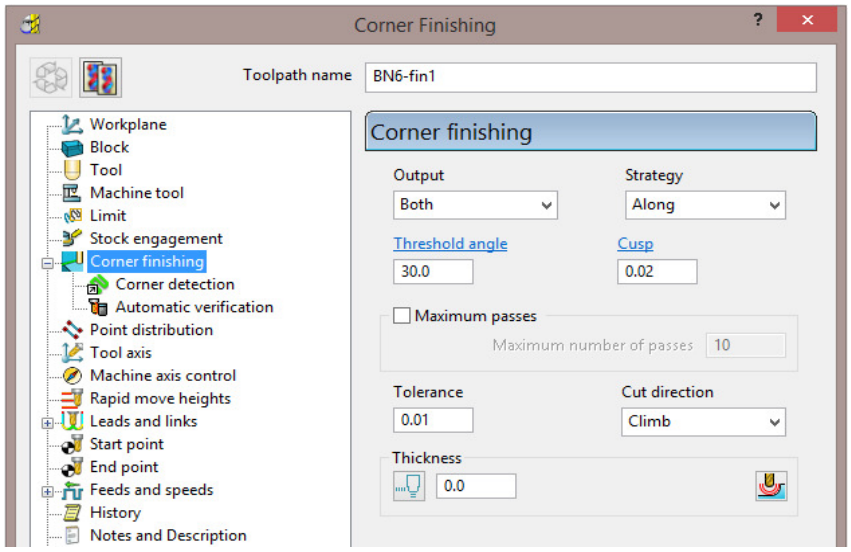

8 Select the **Corner detection** page and select the **Reference tool** as **BN16**

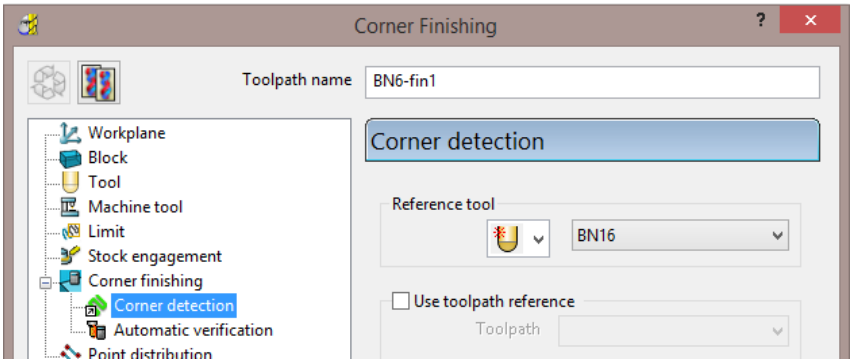

9 Click **Calculate** to process the toolpath and then **Close** the dialog.

*The latest **Corner Finishing** strategy starts processing immediately and is likely to be completed before the **Steep and Shallow finishing** strategy currently pending in the **Queue**.*

When a toolpath is added to the **Queue**, and is in an unprocessed status, the ***Calculator symbol*** on the Toolpath in the **PowerMILL *explorer*** changes to the **Queue** symbol .

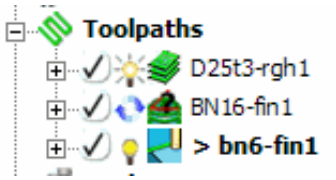

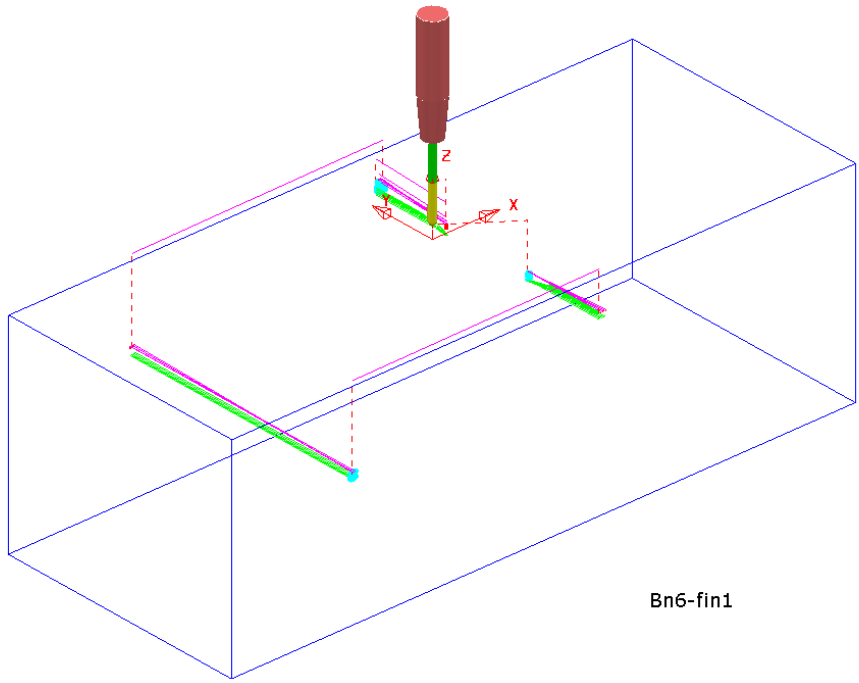

10 Select **File - Save Project** to update:

.....\COURSEWORK\PowerMILL-Projects\ToolQueue-ex1

 Copyright © Delcam Ltd

5. Toolpath Leads & Links

If a tool is allowed to start machining directly at the start of a tool track, it first plunges down into the remaining stock, and then suddenly changes direction to run along the tool track. This is likely to result in machining marks, vibration, and excess wear on both the tool and machinery.

To avoid sudden loading on the tool, appropriate **Lead** moves (at cutting feedrate) on and off tool tracks can be applied.

Air moves (**Link**) between individual tool tracks can add significant amount of extra time to a machining operation. This can be greatly reduced by applying alternative, **Link** move options.

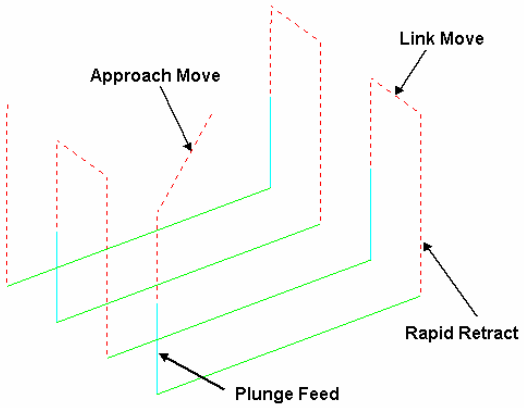

Default Leads and Links

Click on the **Main** toolbar to display the **Leads and Links** dialog and options. You can also access the **Leads and Links** dialog from within a strategy dialog. Note that **Leads and Links** can be retrospectively applied to an existing toolpath.

Z Heights

Skim and Plunge distance - Provides variable control of rapid move heights within a component. These operate in conjunction with Safe Z and Start Z to minimise slow and unnecessary air moves while machining the component form.

Skim distance – An incremental distance above the model where rapid feed moves occur from the end of one tool track to the start of the next. The tool traverses at a high feed rate across the model, clearing the highest point along its route by the Skim value.

Plunge distance – An incremental distance above the local, component surface where a downward rapid movement of a tool changes to plunge feed move.

Lead In/Lead out Moves

Lead In controls the tool movement onto the start of a tool track and **Lead Out** controls the movement away from the end of a tool track.

Available **Lead In** and **Lead Out** moves are:

- None
- Surface normal arc
- Vertical Arc
- Horizontal Arc
- Horizontal Arc Left
- Horizontal Arc Right
- Extended Move
- Boxed
- Straight
- Ramp
- Pocket centre

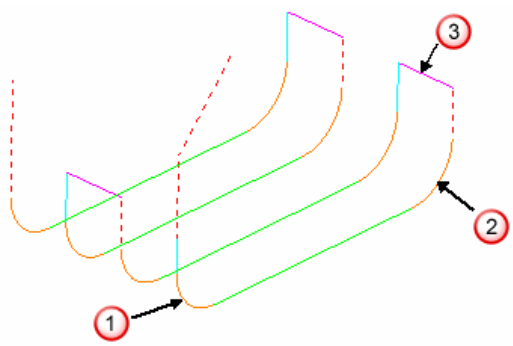

In the above illustration:-

1 - **Lead In** = **Vertical Arc**

2 - **Lead Out** = **Vertical Arc**

3 - **Link move** = **Skim**

Toolpath colour codes:

- **Purple** - Rapid Skim Feed Rate G1
- **Pale Blue** - Plunging Feed Rate G1
- **Green/Orange** - Cutting Feed Rate G1
- **Dotted Red** - Full Rapid G0

Leads and **Links** are effectively extensions to tool tracks and must be gouge protected. **Gouge check** is set as default and any **Lead** that would result in a gouge is not created.

On tooltracks where the **1st Choice** cannot be applied, then the **2nd Choice** is used. If it is not possible to apply either then the **Lead** options are applied as **None**.

The current **Leads and Links** settings are automatically applied when creating new machining strategies.

 Copyright © Delcam Ltd

Example

The following example illustrates the retrospective addition of suitable Leads and Links to finishing toolpaths. The project contains one Roughing toolpath and three Finishing toolpaths.

1 Select **File - Delete All** and **Tools - Reset Forms**.

2 Select **File - Open Project**:

...\PowerMILL_Data\Projects\LeadsLinks-Start

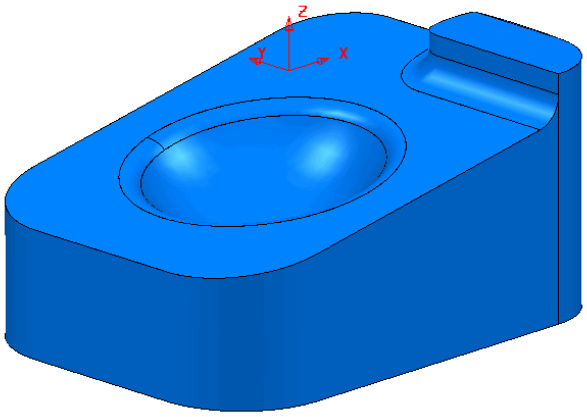

3 Select **File - Save Project As**:

.....\COURSEWORK\PowerMILL-Projects\LeadsLinks-example

4 Select an **ISO2** view.

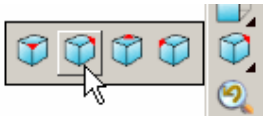

5 **Activate** the toolpath, **BN6-fin1**.

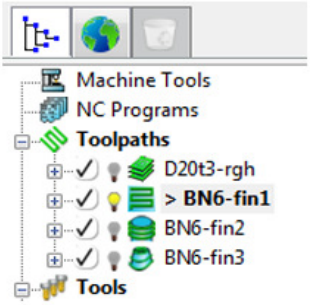

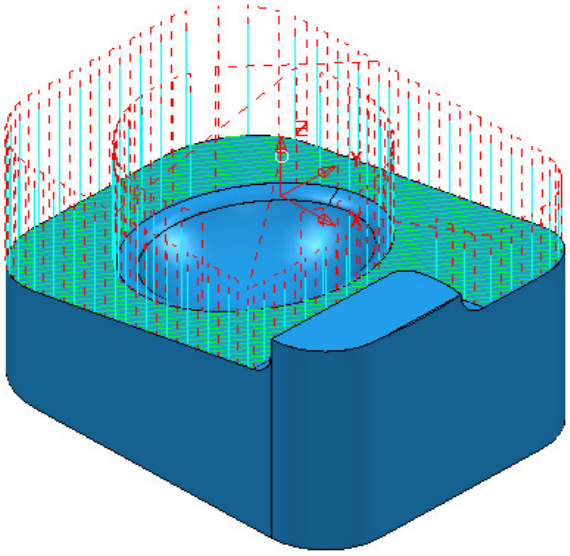

Vertical Arc Leads

Vertical Arc - **Leads** create a circular movement downward at the start and upward at the end of each individual tool track. By default, with the **Gouge check** option selected, the additional moves are not made if a gouge might occur.

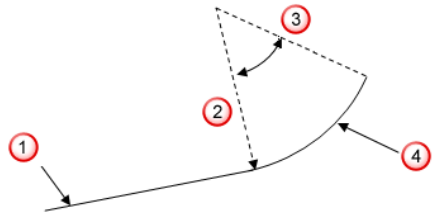

1 - Toolpath segment

2 - Radius

3 - Tangent angle

4 - Lead

6 On the **Main** toolbar, click to open the **Leads and Links** dialog.

7 On the **Leads and Links** dialog, select the **Lead In** tab and:

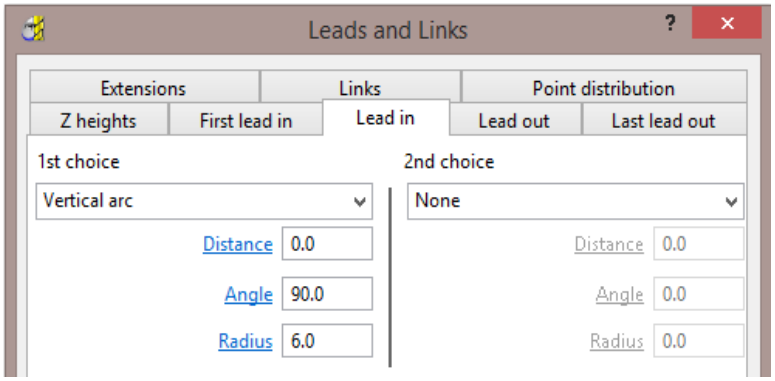

a Select **Vertical Arc** from the **1st Choice** list.

b Enter an **Angle** of **90.0** and a **Radius** of **6.0**

c Click **Apply**.

There is now a **Vertical Arc** leading onto most of the tool tracks.

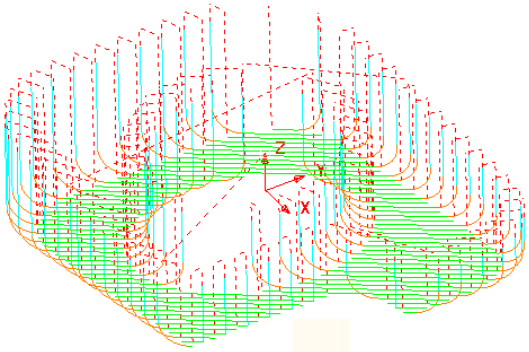

*The new (gouge protected) **Vertical** leads have not been created on the tool tracks that stop close to a raised area of the model.*

 Copyright © Delcam Ltd

8 Click the **Copy to Lead Out** button.

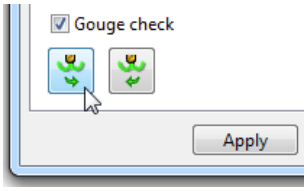

9 Click **Apply** to update the active toolpath.

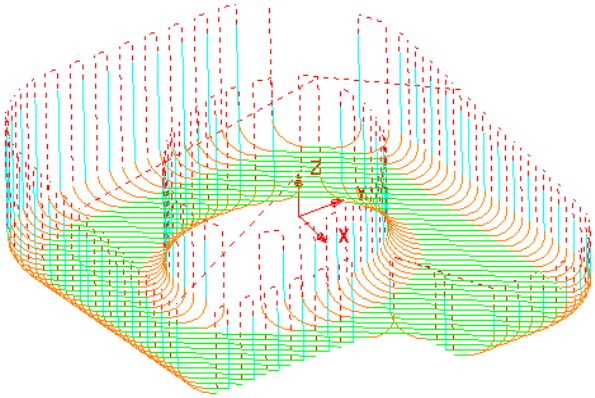

Where gouge free, a **Lead Out** move is applied at the end of each tool track.

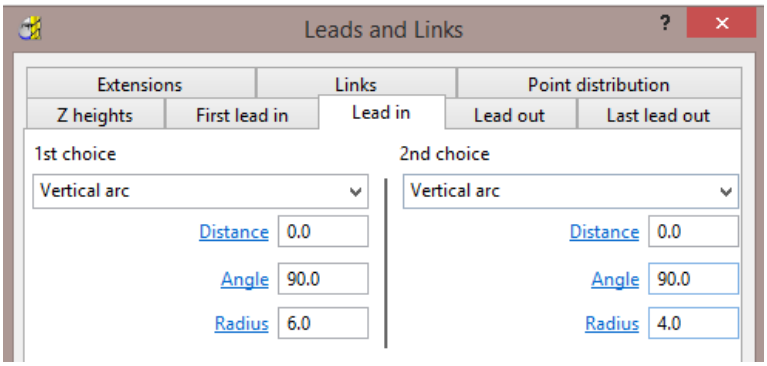

10 Select **Vertical Arc** from the **2nd Choice** list.

a Enter an **Angle** of **90.0** and a reduced value **Radius** of **4.0**

b Click the **Copy to Lead Out** button.

c Click **Apply**.

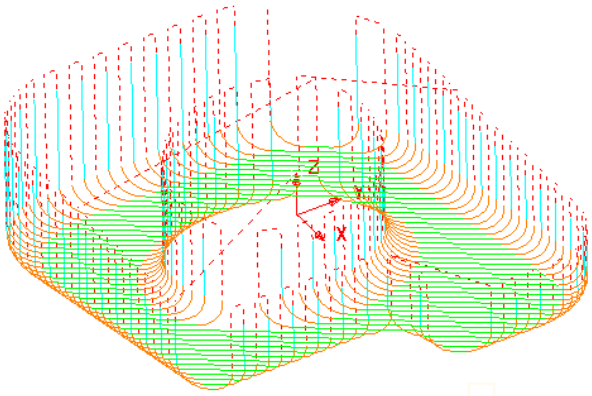

Wherever it is gouge free on the above toolpath a **1st Choice** of **Lead In/Out** with a **Vertical Arc** is applied.

If this is not possible without a gouge occurring, then the 2nd Choice of a **Radius 4**, **Vertical Arc** is attempted.

If neither the 1st or 2nd Choice is possible without a gouge occurring, then no **Lead In/Out** is applied to that part of the toolpath.

Links

A **Link** move is the movement of the tool from the end of a tool track to the start of the next. For efficient tool moves across the model, you can reduce the height of the **link** moves to be closer to the local model form.

- **Short/Long threshold** - This defines the distance limit up to which the **Short - Links** apply. Any move from the end of a tool track to the start of the next, which exceeds this distance is defined by the **Long** - **Link** move.
- For **Short** links, the available options include **Safe Z**, **Incremental**, **Skim**, **On Surface**, **Stepdown**, **Straight**, and **Circular Arc**.
- For **Long** links, the available options include **Safe Z**, **Incremental**, and **Skim**.
- For **Default** (first and last) links the available options include **Safe Z**, **Incremental**, and **Skim**.
- **Arc fit rapid moves** can be applied, if compatible with a machine control system.

11 **Activate** the toolpath **BN6-fin1**.

12 Click and open the **Leads and Links** dialog.

13 Select the **Z Heights** tab to access the ***Skim*** and ***Plunge*** **distance** options.

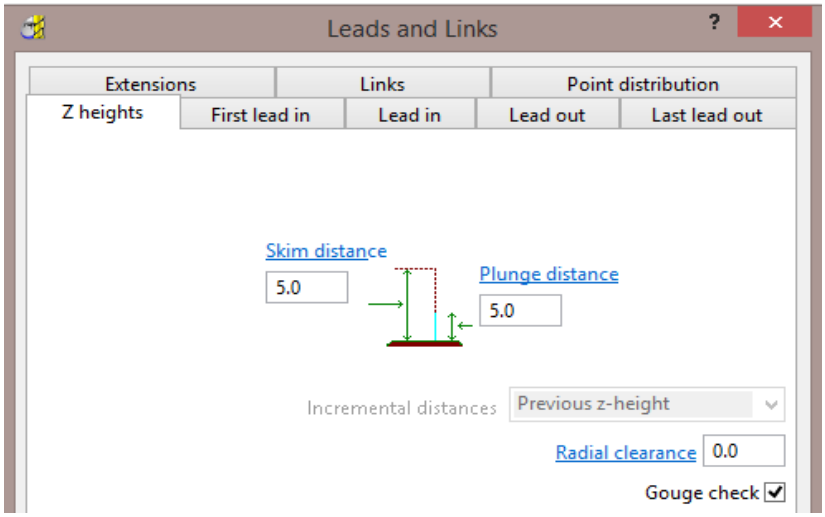

- **Skim Distance** - is the incremental height at which the tool clears the highest point on the **model** between tool tracks.
- **Plunge Distance** - is the Incremental height above the **model** at which the tool rapids down to before using the **Plunge Feed Rate**.

14 Select the **Links** tab.

 Copyright © Delcam Ltd

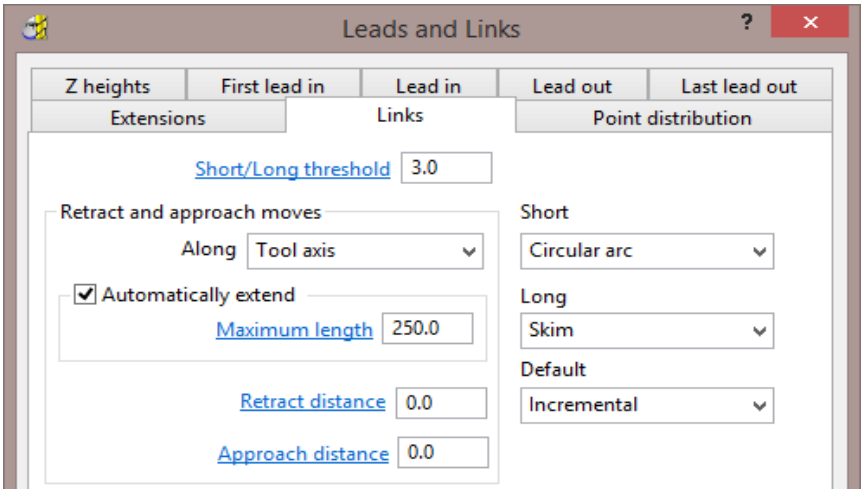

a Enter the **Short/Long threshold** as **3**

b Link move distances less than this value will use the **Short** options and those greater will use the **Long** options.

c Select ***Short*** as **Circular arc**, ***Long*** as **Skim**, and ***Default*** as **Incremental**.

15 Click **Apply**.

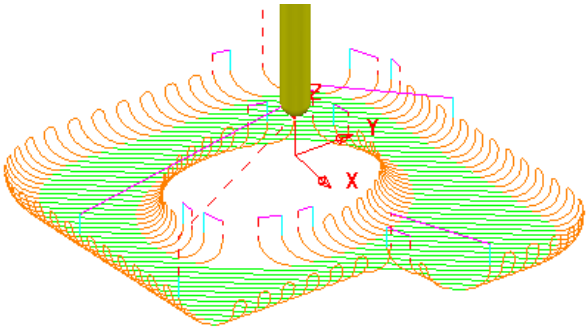

*The distance between the ends of adjacent tool tracks is greater than the **Short/Long threshold** value in several areas of the toolpath (In these instances **Skim** moves apply).*

16 Increase the value for **Short/Long threshold** to **8**.

17 Click **Apply**.

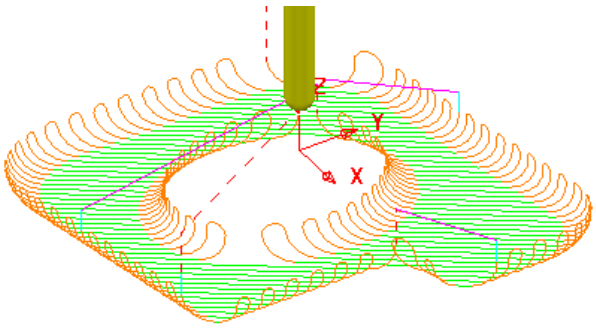

*By increasing the value of the **Short/Long threshold**, the number of occurrences of **Short Link - Circular Arcs** has increased.*

The remaining **Link** moves would benefit from **Vertical Arc** - **Lead In/Out** moves, but not on the existing **Circular Arc** Links.

18 Open either the **Lead in** or **Lead out** page.

19 Un-tick the **Add leads to short links** option.

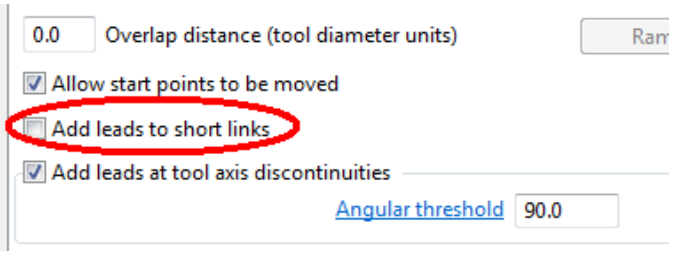

20 Click **Apply**.

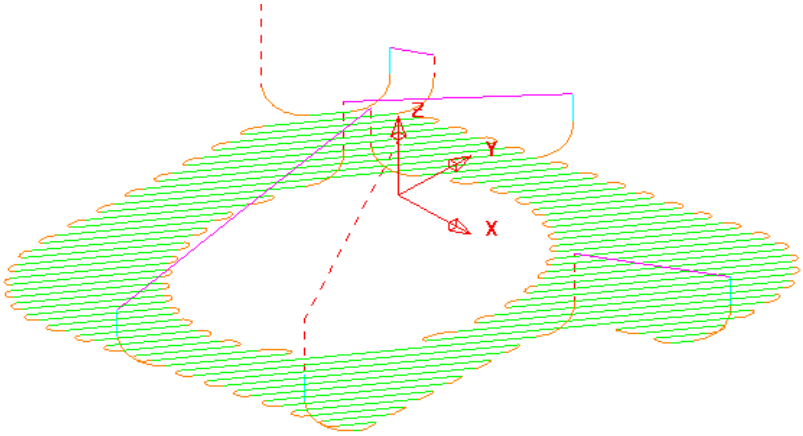

The **Lead** moves exist on the **Long links** but not on the **Short links**.

Copyright © Delcam Ltd

Applying Leads and Links locally to individual tool tracks

21 Use the ***left mouse key*** to select one of the individual link moves where the Lead is currently a **Vertical Arc**.

22 In the **Leads and Links** dialog, select the **Lead In** tab and select **1st Choice** as **Extended Move** with **Distance 10**.

23 Select the **Copy to Lead Out** tab.

24 Click **Apply**.

25 The selected **Vertical Arc** lead move is changed to an **Extended** move.

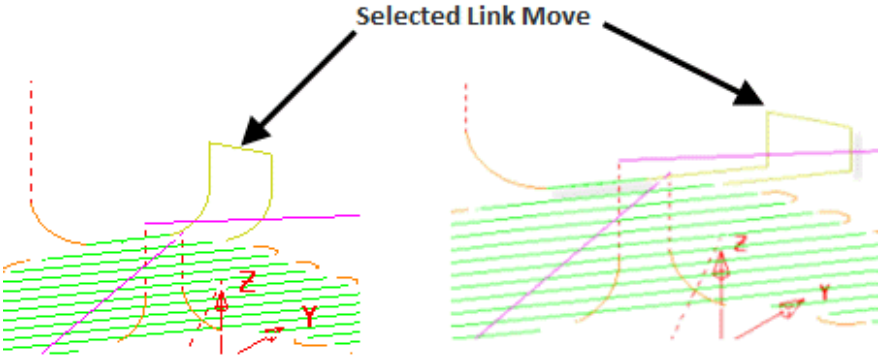

26 Select **File** - **Save Project** to update:

.....\COURSEWORK\PowerMILL-Projects\LeadsLinks-example

Horizontal Arc Leads

This produces circular leads on the horizontal plane. This type of lead is frequently used for toolpaths running at constant Z, or with only small changes in Z height.

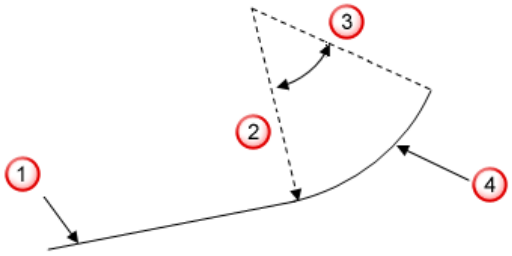

1 Toolpath segment

2 Radius

3 Lead

4 Tangent angle

27 From the **Main** menu, select **Tools** - **Reset Forms** to return the **Leads and Links** settings to default.

28 In the **PowerMILL** ***explorer***, right-click the **BN6-fin2** toolpath and select **Activate**.

29 Select an **ISO1** View.

30 Click on the **Main** toolbar to open the **Leads and Links** dialog.

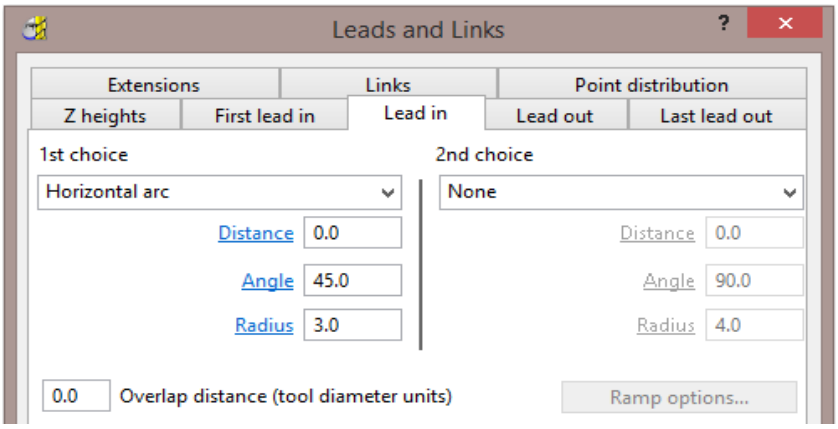

31 Select the **Lead In** tab, and change **1st Choice** to **Horizontal Arc** with an **Angle** of **45** and a **Radius** of **3.0**

32 Click **Copy to Lead Out** and then **Apply**.

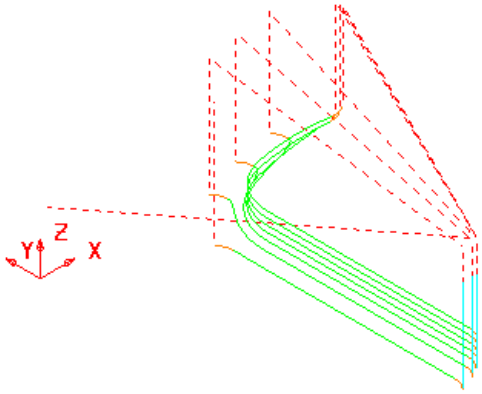

*There is no need to utilise the **2nd choice** options as the **1st Choice** of **Horizontal Arc - Leads In/Out** have appeared on all the tool tracks.*

33 In the existing **1st Choice** - **Lead In** page input a value of **5** for the **Distance** and select **Apply**.

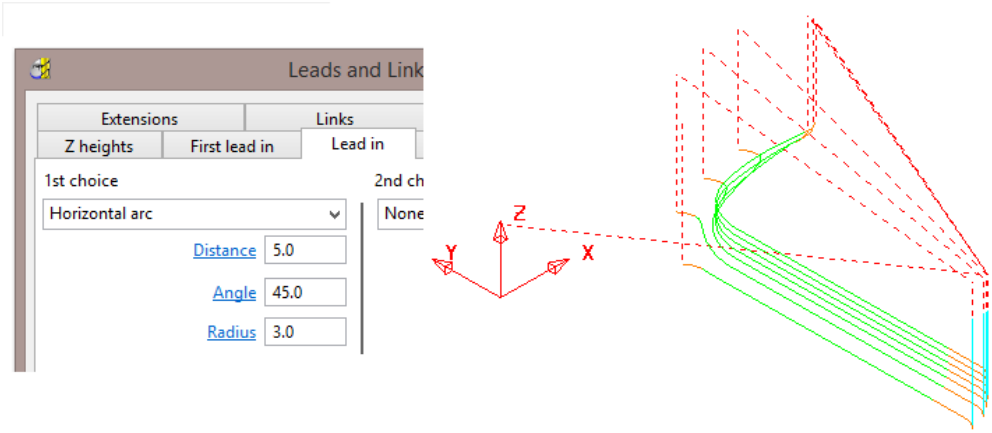

 Copyright © Delcam Ltd

Extensions

Extensions are additional lead options that are applied outside the existing **Lead In/Out** moves.

34 Select an **ISO 4** view.

35 In the **Leads and Links** dialog, select the **Extensions** tab and for both the **Inward** and **Outward** options, enter a **Vertical Arc** with **Angle 90.0** and **Radius 5.0**

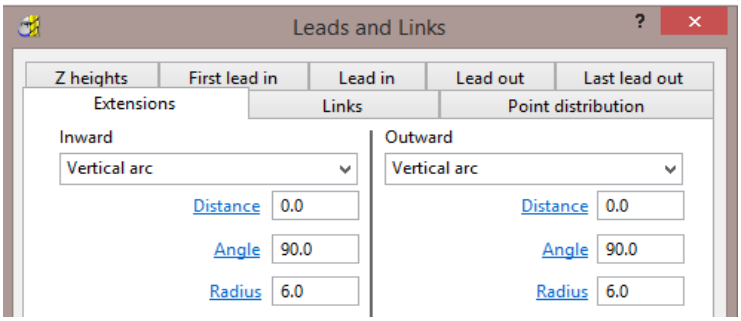

36 Click **Apply**.

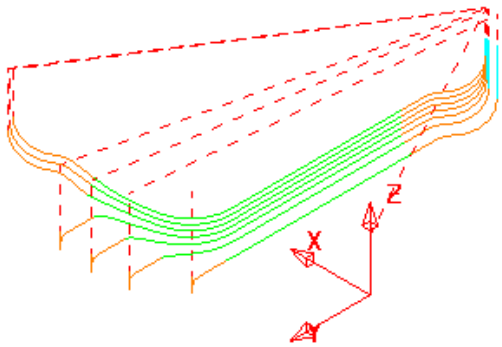

A **Vertical Arc** - **Extension** is added to all of the **Lead In/Out** moves.

Additional Short Links options

In addition to **Safe**, **Incremental**, and **Skim**, the following options are also available in the **Short** link section. These additions are not available in the **Long** link options.

- **On Surface** - This links the tool tracks with a gouge free, direct move that follows the surface form.
- **Stepdown** - The link move remains at a constant height and performs a gouge-checked move to the start of the next tool track, where it then feeds down onto the surface.
- **Straight** - In this case, the link is a gouge-checked, direct linear move to the start of the next tool track.
- **Circular Arc** - This links the tool tracks with a gouge-free circular move that follows the surface form.

Exercise

1. **Activate** the **BN6-fin3** toolpath and **Apply** the **Leads and Links** as follows:
   a. **Links**: ***Long/Short/Default*** – **Skim**.
   b. **Lead In**: 1st Choice - **Ramp** - Options - **Max Zig Angle 4**, **Follow Toolpath**, and **Height 1**
   c. **Lead Out**: 1st Choice - **Vertical Arc** – **Angle 90** – **Radius 3**

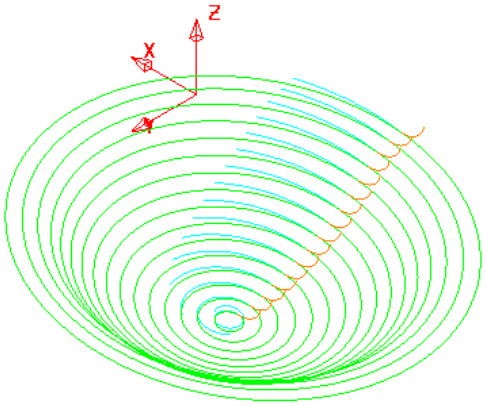

The **Links** have been visually removed to enable a better view of the **Leads**.

2. In the **Leads and Links** dialog select the **Lead in** page and input **0.5** in the box named **Overlap distance (tool diameter units)**.
3. Apply the **Leads and Links** dialog.

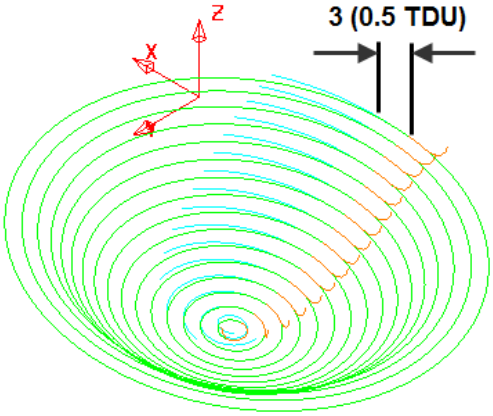

Overlap Distance causes the cutter to continue beyond the natural end point along the original toolpath by a specified distance based on the Tool Diameter (**TDU**). In this case the distance is **3mm** (**0.5 TDU**).

 Copyright © Delcam Ltd

Arc Fitting Rapid Moves

Leads and Links

Arc Fitting works on all ***Rapid Moves*** including **Skim** moves. This option is ideal for applications where you want to avoid sharp changes in direction; for example, High Speed Machining.

Not all machine tool controllers will support this option.

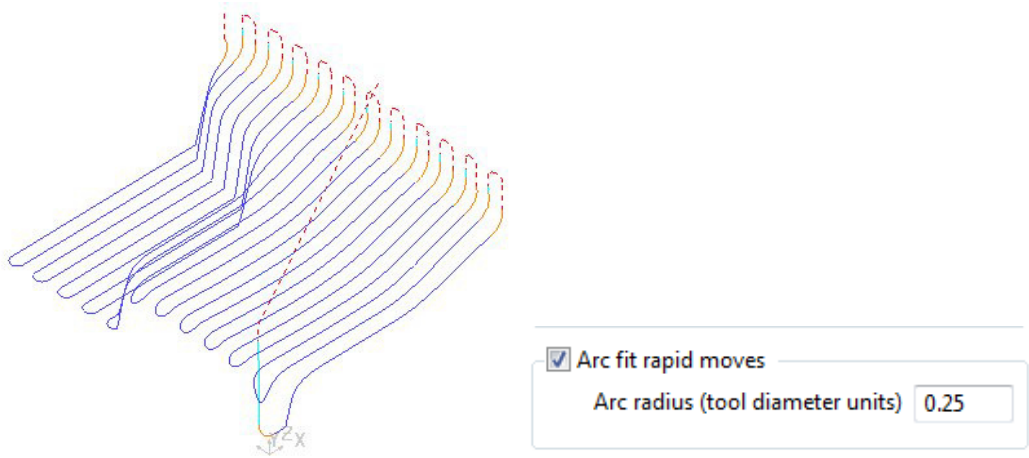

- The **Arc Fit Rapid Moves** option is located in the **Links** dialog.
- The **Arc fit rapid moves** box must be **ticked**.
- The **Arc radius** is defined as a proportion of the active, Tool Diameter (**TDU**).

Copyright © Delcam Ltd

6. Boundaries

A **Boundary** consists of one or more closed wireframe segments. **Boundaries** are mainly used to limit machining strategies to specific areas of the component.

Earlier in the course, **Boundaries** were utilised to limit machining strategies, so that they occur in more compatible areas of the component.

For example, **Constant Z finishing** is more effective on steep sidewalls and **Raster finishing** on shallow areas.

There are several options available for creating boundaries. Most involve interaction with other **PowerMILL** entities (eg **Tools**, **Thickness**, **Stock Model**, etc), while **User Defined** will access a separate dialog for direct input of existing geometric, entities.

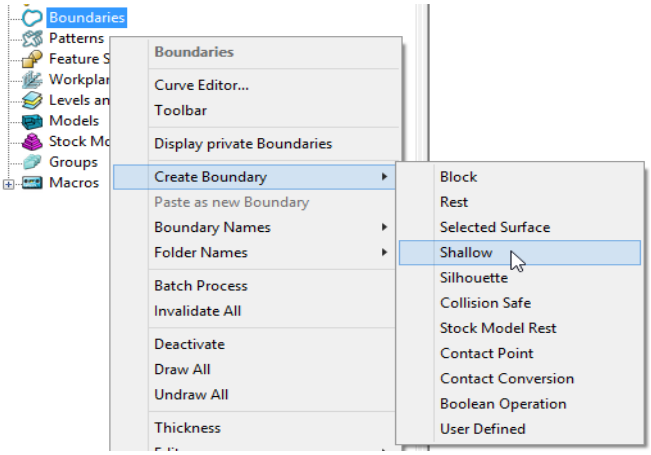

Switch off the Private Boundaries creation option

1. From the **Main** menu, select **File - Delete All** and **Tools** - **Reset Forms**.
2. From the **main** pulldown menus select **Tools** – **Options** and in the dialog select **Boundaries** – **Private boundaries**.

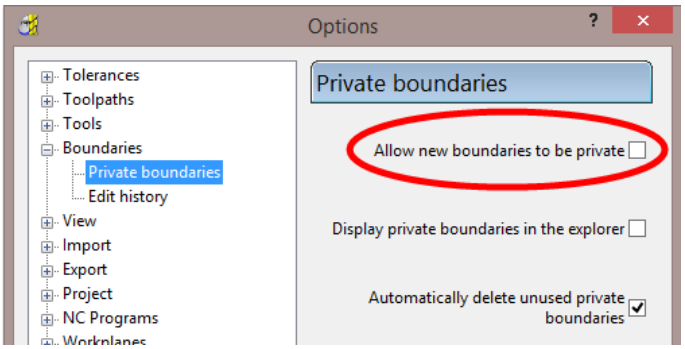

3. **Un-tick** the box named **Allow new boundaries to be private**.
4. Select **Accept** to close the **Options** dialog**.**

User Defined Boundary

To access the **User Defined** – ***Boundary*** options, go to the **PowerMILL *explorer***, and select **Boundaries** > **Create Boundary** > **User Defined**.

This will access a separate sub-menu in which the range of options, generally involve direct input of existing wireframe entities.

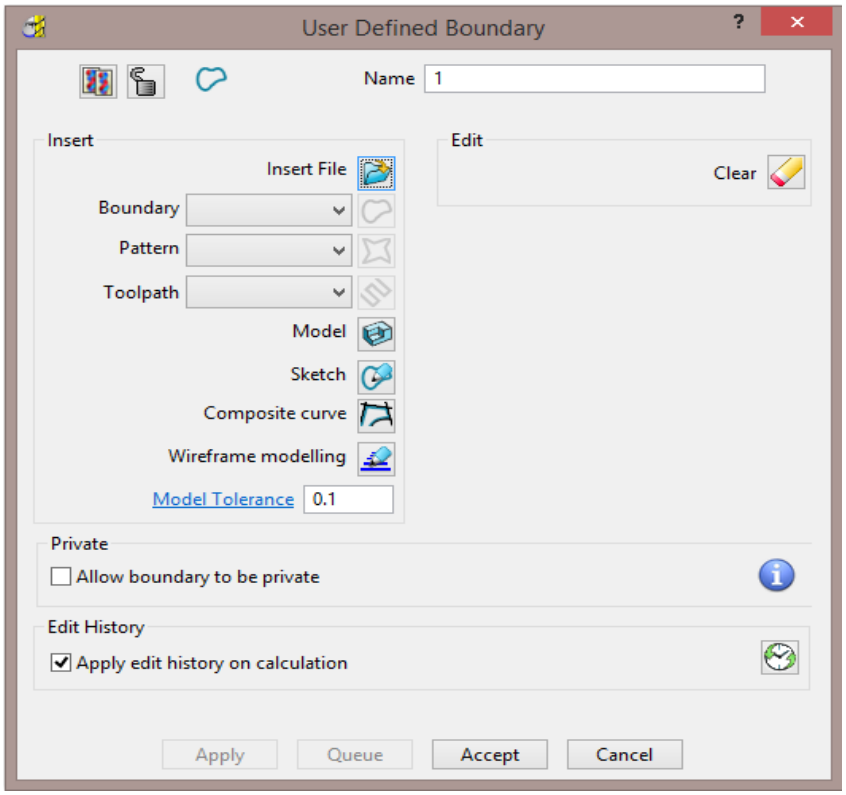

Insert File - Opens the browser to locate an externally stored geometry file.

The **Boundary**, **Pattern**, and **Toolpath** buttons are disabled unless a compatible entity is selected in the adjacent input box.

Model - Inserts the edge of the selected **model**.

Sketch - Opens the **Curve Editor** toolbar.

Composite curve - Opens the **Create Composite Curve** toolbar.

Wireframe Modelling - Provides access to the PowerSHAPE wireframe module.

5 Select **File** - **Save Project As**:

.....\COURSEWORK\PowerMILL_Projects\BoundaryBasics

6 Select **File** - **Import Model...**

.....\PowerMILL_Data\Models\cowling.dgk

 Copyright © Delcam Ltd

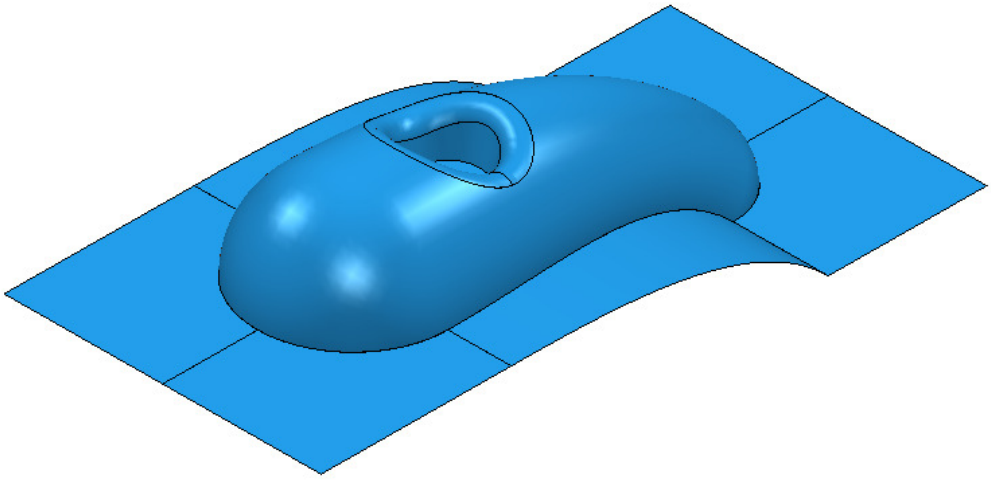

7 Select the **surfaces** defining the central pocket and fillet.

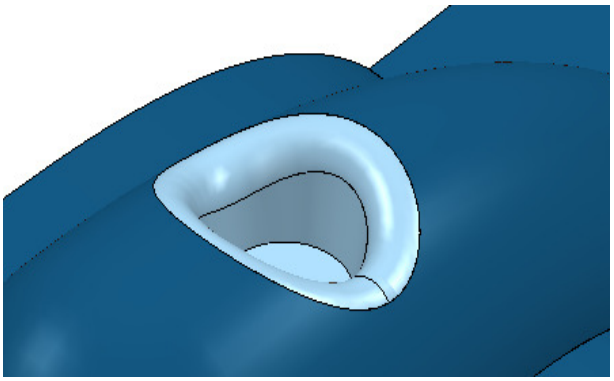

8 In the **PowerMILL *explorer***, right-click **Boundaries** and select **Create** - **User Defined**.

9 In the **User Defined Boundary** dialog, click the **Model** button.

A **Boundary** segment is created around the edge of the selected part of the model.

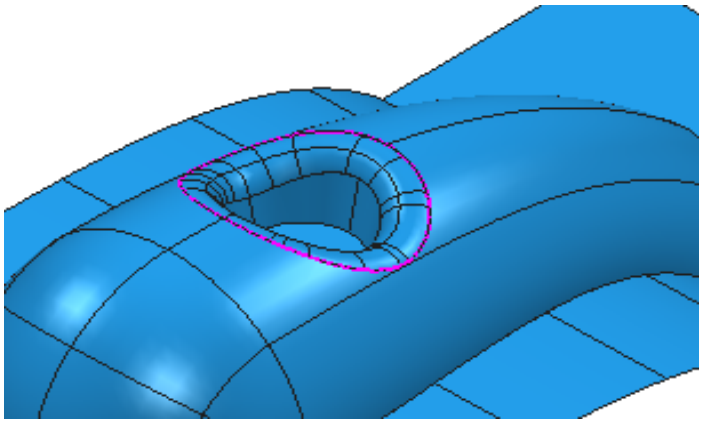

10 Select a ***View from top*** (Z) and switch off the **shaded** view but retain the **wireframe** view.

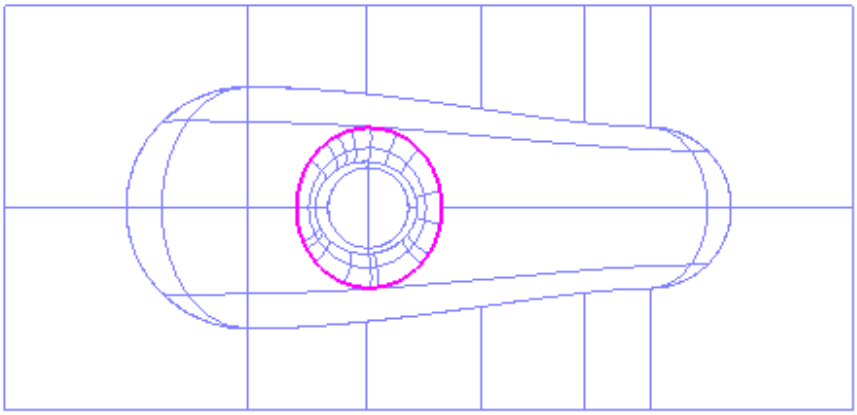

11 In the **PowerMILL *explorer***, right-click **Boundaries** and select **Create Boundary - User Defined**.

12 In the **User Defined Boundary** dialog, click the **Sketch** button

to open the **Curve Editor** toolbar.

13 On the **Curve Editor** toolbar, click the following button to open the **Options** dialog.

14 Un-tick **Intelligent Cursor** - **Snapping Options** (1) to switch off the Intelligent Cursor (2) enabling 'free form' sketching.

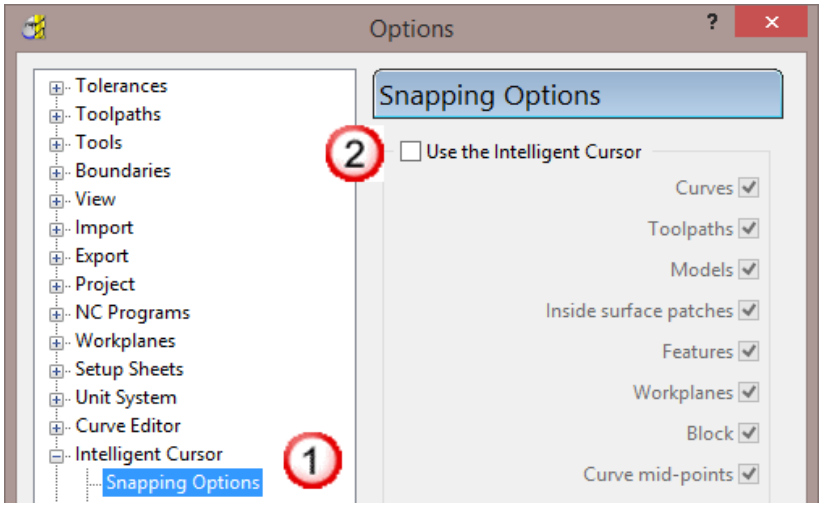

15 Click **Accept** to keep the changes.

16 From the **Curve Editor** toolbar, select **Create a Bezier curve** .

17 Using the left mouse key, click points within the model to create a sketched **Boundary**.

 Copyright © Delcam Ltd

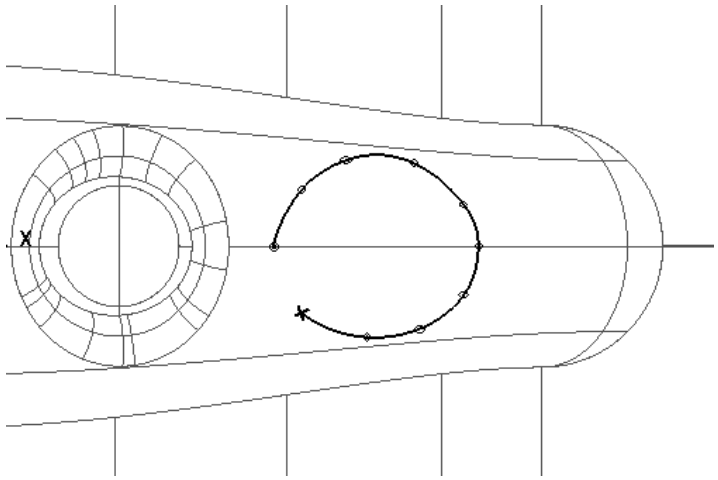

*If required, use **Undo** to sequentially remove any invalid points.*

*While the **Intelligent cursor** is **switched off** do not attempt to close the segment by trying to snap the 'final span' back on to the start point.*

18 On the **Curve Editor** toolbar click to open the **Options** dialog.

19 Select **Intelligent Cursor** - **Snapping Options** and tick - **Use Intelligent Cursor**.

20 Then ***snap*** the final span of the **Bezier Curve** onto the original start point.

21 On the **Curve Editor** toolbar click to accept the changes and close the session.

22 If the **Boundary** segment is not smooth enough, right mouse click on it and from the local menu, select **Edit - Spline Selected** to open the **Spline fitting tolerance** dialog.

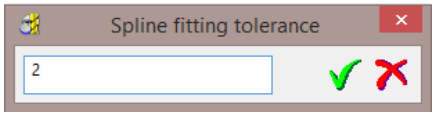

23 Enter the value 2 and click to apply and close the dialog.

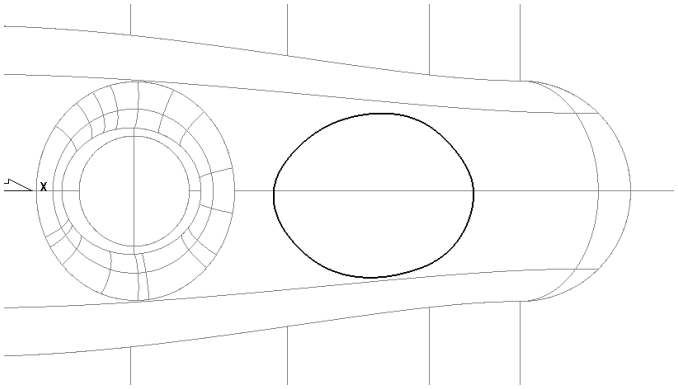

The **Boundary** segment is splined through the polyline points as a curve maintaining the original form to within a maximum deviation of 2.

In instances where the required deviation would be greater than 2, a tangency will remain either side of the affected points.

Selected Surface Boundary

A **Selected Surface Boundary** defines one or more segments around where the ***active tool*** would fully machine the selected surfaces. The segments represent the tip position of the ***active tool***.

1 Create a **Block** - ***Defined by*** **Box** using ***Type*** **- Model**.

2 Create a **Ball Nosed** tool of **Diameter 16** with the ***Name*** **BN16**.

3 Select the **surfaces** defining the central pocket, including the fillet.

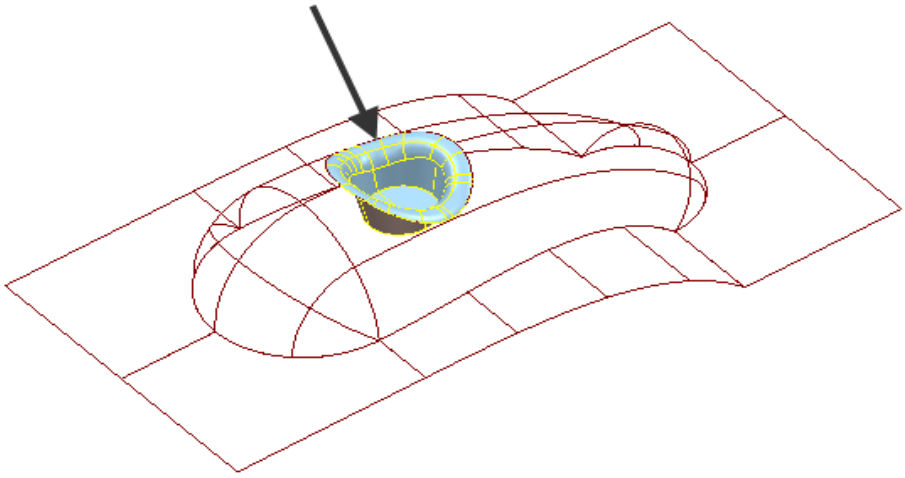

4 In the **PowerMILL** ***explorer***, right-click **Boundaries** and select **Create Boundary - Selected Surface**.

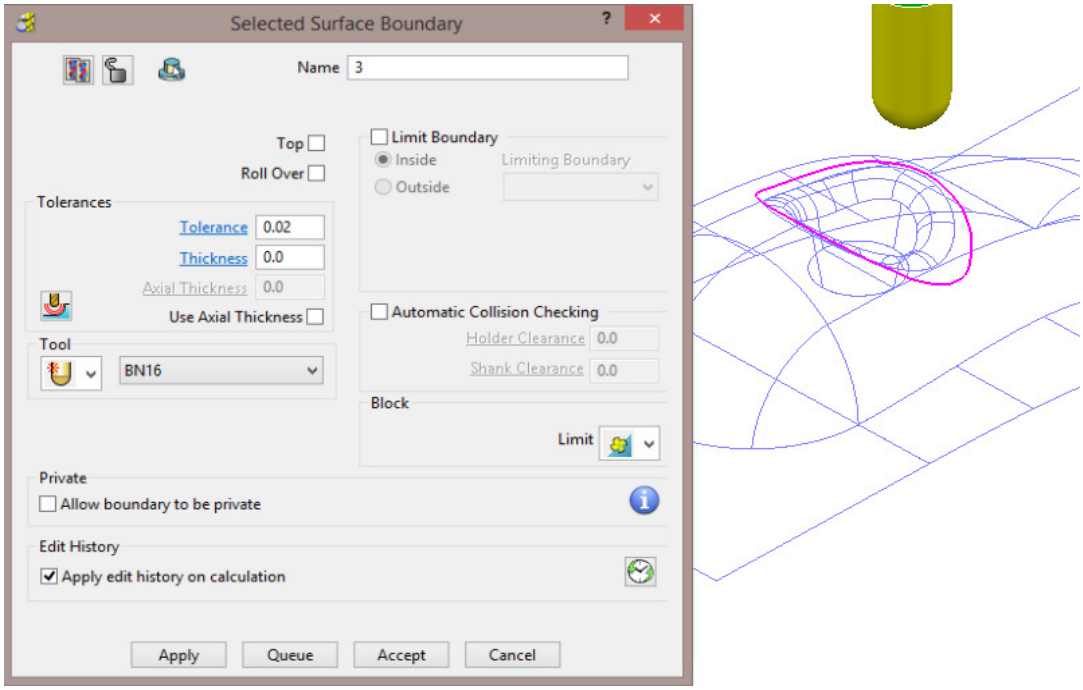

5 Using the above settings, click **Apply** to create a single segment, **Selected Surface Boundary**.

 Copyright © Delcam Ltd

Shallow Boundary

A **Shallow Boundary** defines one or more segments where the model drops through a specified **Upper Angle** downwards from the horizontal plane. It is designed to differentiate ***steep*** and ***shallow*** areas where **Constant Z** and **Pattern** strategies are more effective. The **boundary** is calculated relative to the active tool parameters.

1 In the **PowerMILL *explorer***, right-click **Boundaries** and using the default settings, **Create Boundary - Shallow**.

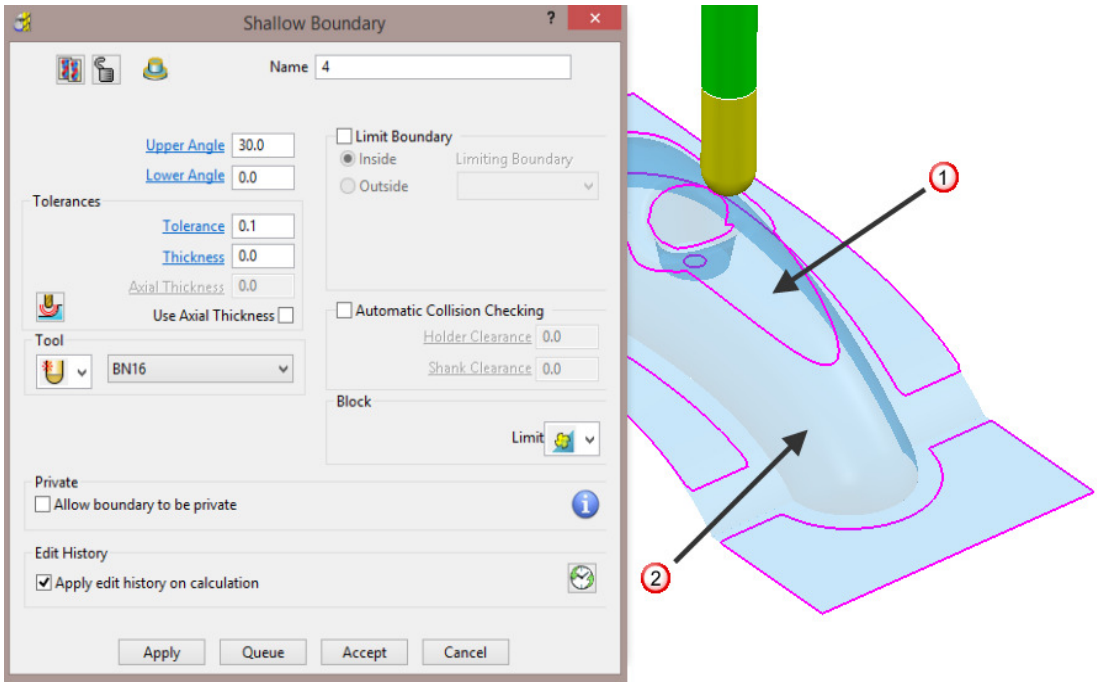

1 - ***Shallow*** area more suited to **Raster Finishing** (above 30 degrees).

2 - ***Steep*** area more suited to a **Constant Z** Finishing (below 30 degrees).

2 **Apply** the form to create the above **Boundary** segments.

Silhouette Boundary

A **Silhouette Boundary** defines the outline around the maximum dimensions selected model, offset by the ***tool radius***.

1 Select the following **surfaces** on the model:

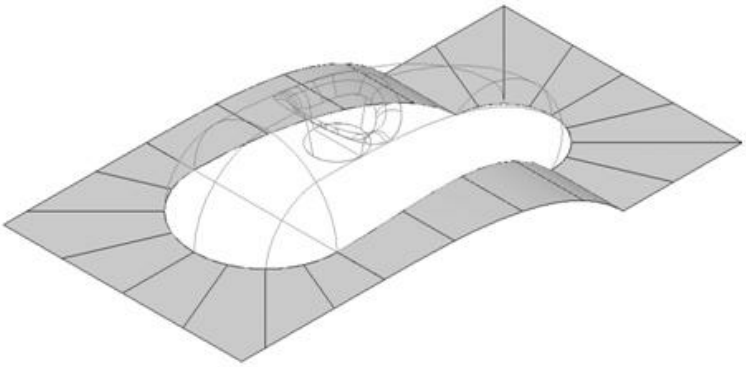

*Use the **Shift** key on your keyboard to select multiple surfaces.*

2 Right-click the **Model** and select **Edit - Delete Selected Components**.

3 With the selected areas now deleted, in the **PowerMILL *explorer***, right-click **Boundaries** and select **Create Boundary** - **Silhouette**.

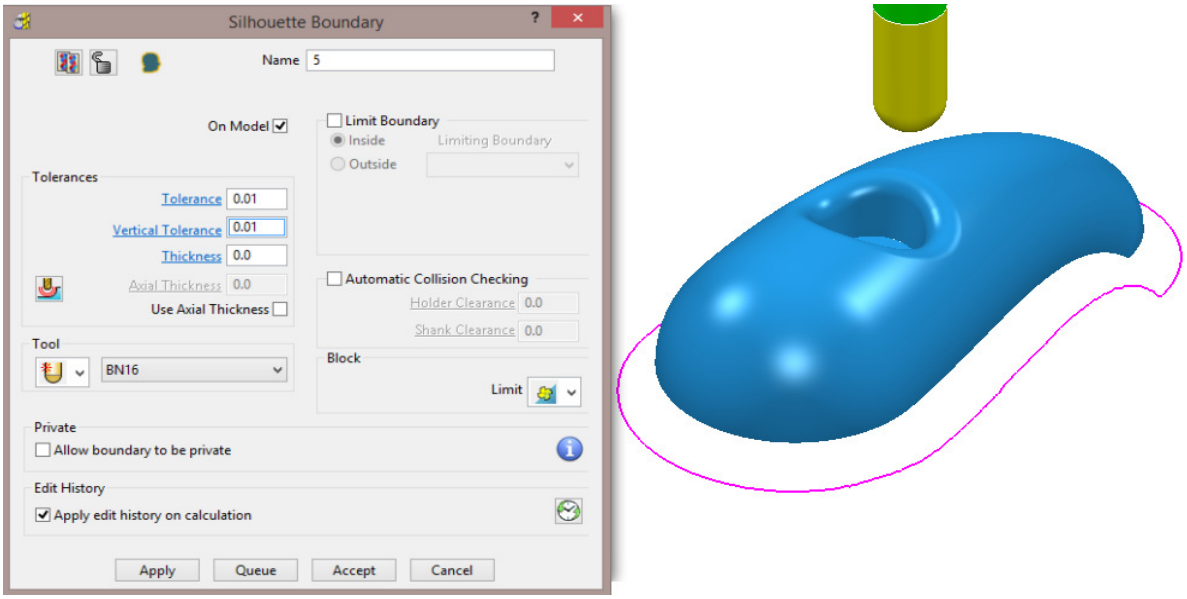

Rest Boundary

A **Rest Boundary** defines the area inaccessible to a specified reference tool. It also requires a smaller active tool to be specified otherwise it will not generate segments.

1 Create a **Ball Nosed** tool of **Diameter 8** with the **Name BN8**.

2 In the **PowerMILL *explorer***, right-click **Models** and select **Delete All** to remove the incomplete component.

3 **Import** the original **Model** back into the **Project**:

.....\PowerMILL_Data\Models\cowling

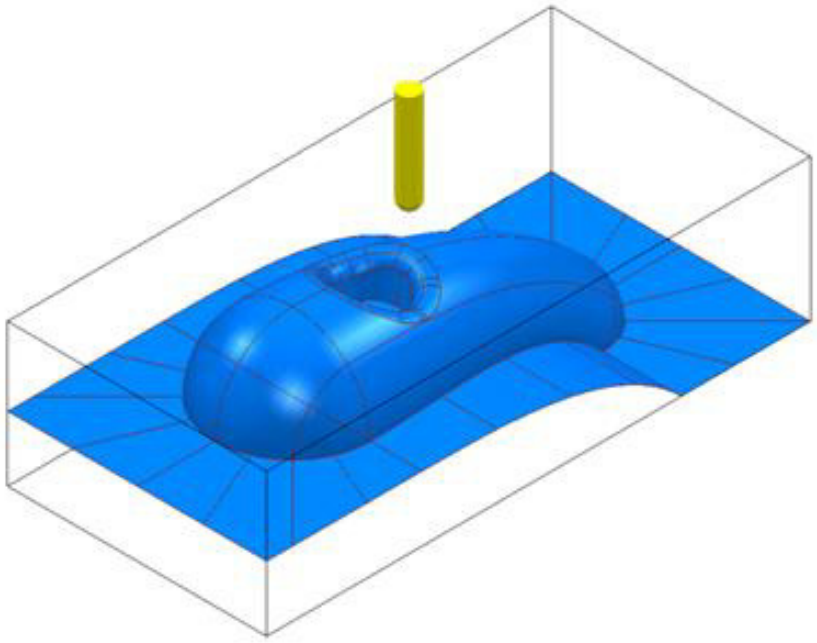

 Copyright © Delcam Ltd

4 In the **PowerMILL *explorer***, right-click **Boundaries** and select **Create Boundary - Rest** to open the **Rest Boundary** dialog.

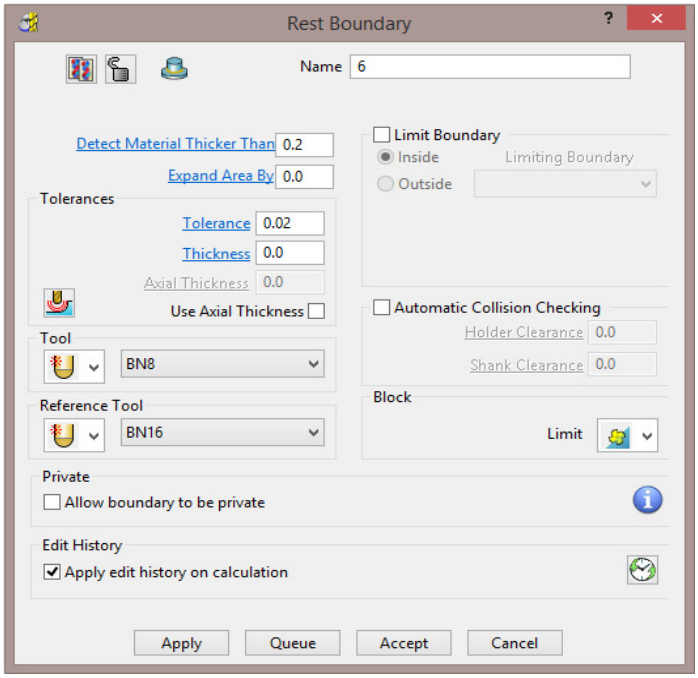

5 Input ***Expand Area* 0**, select ***Tool* BN8**, and ***Reference Tool* BN16**.

6 Set with ***Limit tool centre to block edge***. 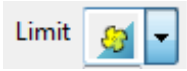

7 Click **Apply** to create the following **Rest Boundary**.

8 Click **Accept** to close the dialog.

9 **Save** the **Project** to update:-

.....\COURSEWORK\PowerMILL_Projects\BoundaryBasics

10 Select a **View** down the **Z Axis** and **Un-draw** the model.

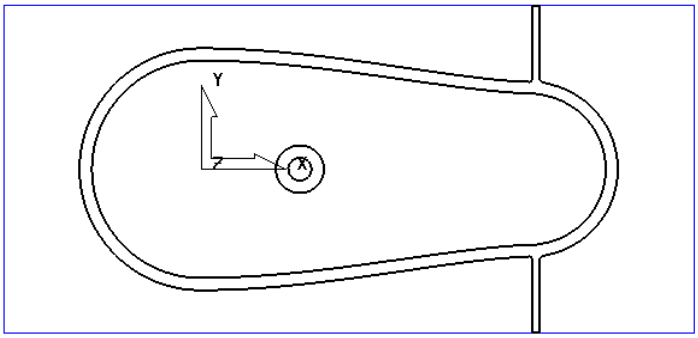

The above **Boundary** identifies areas on the component that are inaccessible to the **BN16** tool geometry to be locally machined with the **BN8** tool.

On closer inspection, the central pocket area would be more effectively machined with a flat bottomed tool and a smoother, more continuous toolpath, can be created if the 2 spurs are removed from the outer segment (to be machined later as a separate toolpath).

Editing Boundaries

It is often necessary to edit the original geometry defined by **Boundary** segments. The best way to achieve this in **PowerMILL** is via the dedicated **Curve Editor** tool. As it is not exclusive to **Boundaries**, a more detailed range of **Curve Editor**, options and applications are covered in **Chapter 11**.

1. In the **PowerMILL *explorer***, right-click the **Rest Boundary** (**6**) entity and in the local menu select **Edit** - **Copy Boundary** to create a copy named (**6_1**).
2. In the **PowerMILL *explorer***, right-click the original **Rest Boundary** (**6**) and ***Rename*** it as **Master**.
3. ***Rename*** the new copy of the **Rest Boundary** (**6_1**) as **Rest**.
4. **Activate** the **Boundary** named **Rest**.
5. Select the ***2 inner segments*** on the **Rest boundary** (**Rest**) by dragging a box over them, and then press the **Delete** key on your keyboard to delete them.

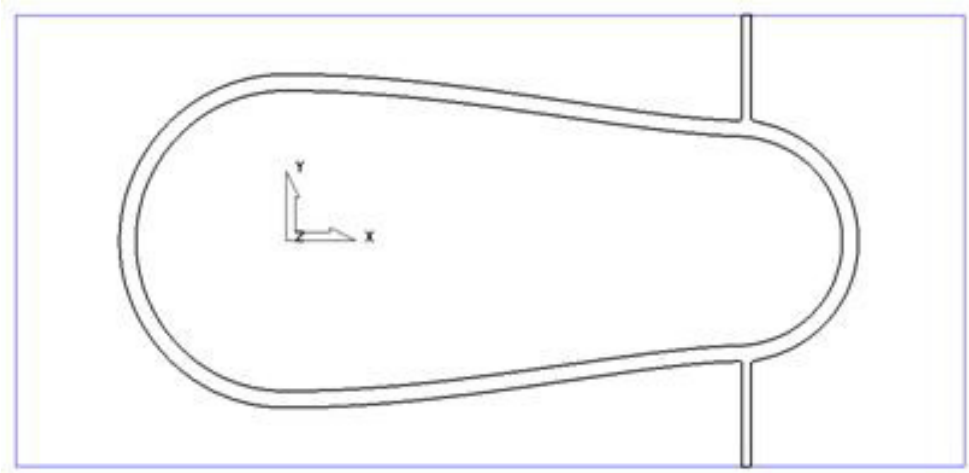

The next stage will be to Offset the Boundary and then remove the two spurs, which will be carried out after an explanation of the **Boundary Editor** dialog.

Boundary – Access to the Curve Editor

Once created, you can modify a ***Boundary segment*** using the options available on the **Boundary** Toolbar.

Click on the **Boundary** toolbar to activate the **Curve Editor** toolbar.

*You can also double-click a **boundary segment** to activate the **Curve Editor** Toolbar.*

 Copyright © Delcam Ltd

Edit > Transform

1 In the **PowerMILL *explorer***, right-click on the boundary **Rest** and from the local menu, select **Curve Editor**.

2 In the **Curve Editor** toolbar select the **Offset** option

3 In the **Offset** toolbar, select the **3D Smooth** button, input a **Distance** of 1 and then press the **Return** key.

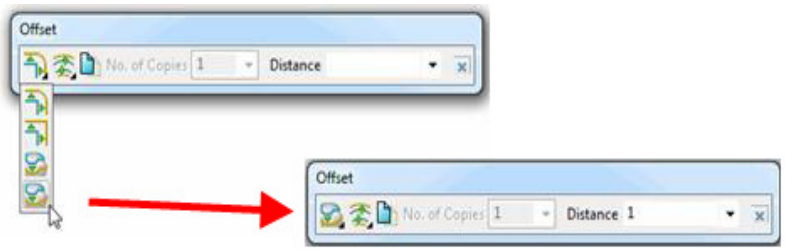

4 Click in the **Curve Editor** toolbar to accept the changes and exit.

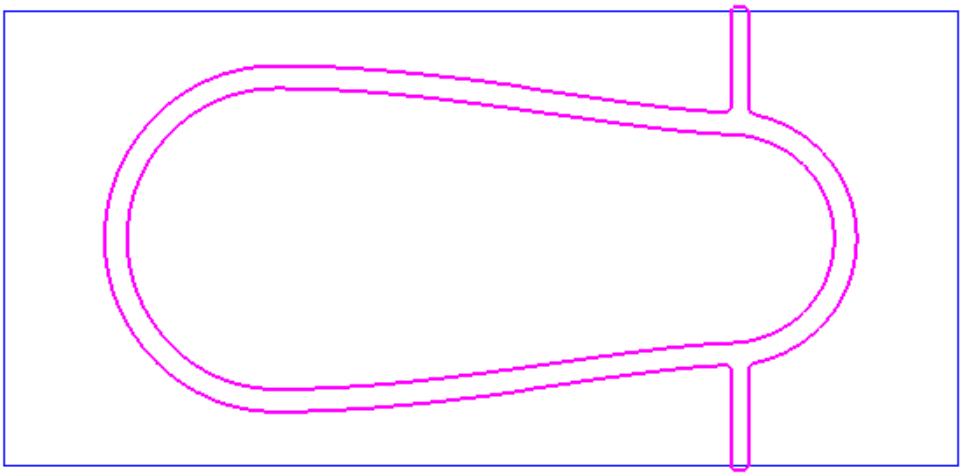

Curve Point - editing

The **Point** editing options are located towards the right hand side of the Curve Editor toolbar .

1 In the **PowerMILL explorer**, right-click **Boundaries** and from the local menu select **Toolbar**.

2 On the **Boundary** toolbar, click the **Curve Editor** button to display the **Curve Editor** toolbar.

3 Select (Left click) the outer **boundary segment** in the graphics area.

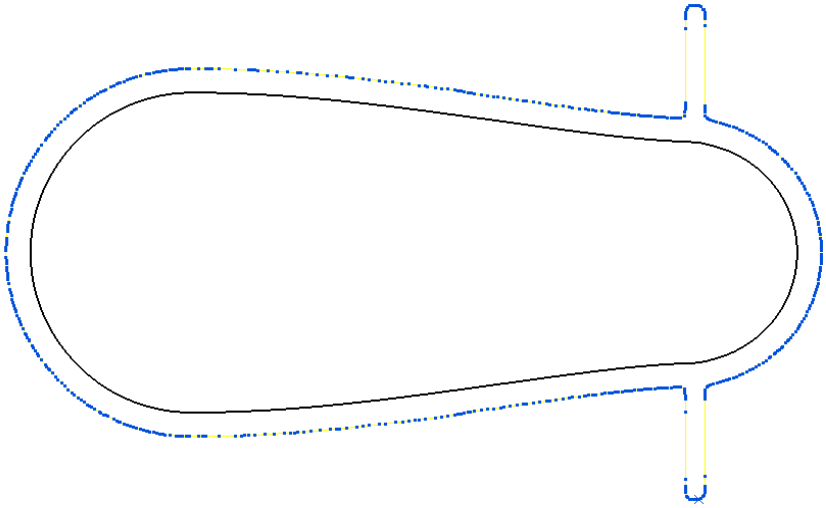

The points are displayed on the selected boundary segment.

4 **Zoom** into the area of the selected segment and select all the points that define the spur.

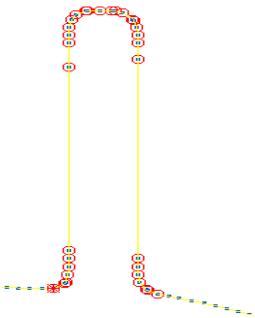

*To select multiple points, hold down the **Shift key** while selecting the points with the mouse.*

5 On the **Curve Editor** toolbar, click **Delete points** to remove the spur from the segment.

6 Repeat the procedure on the other spur.

 Copyright © Delcam Ltd

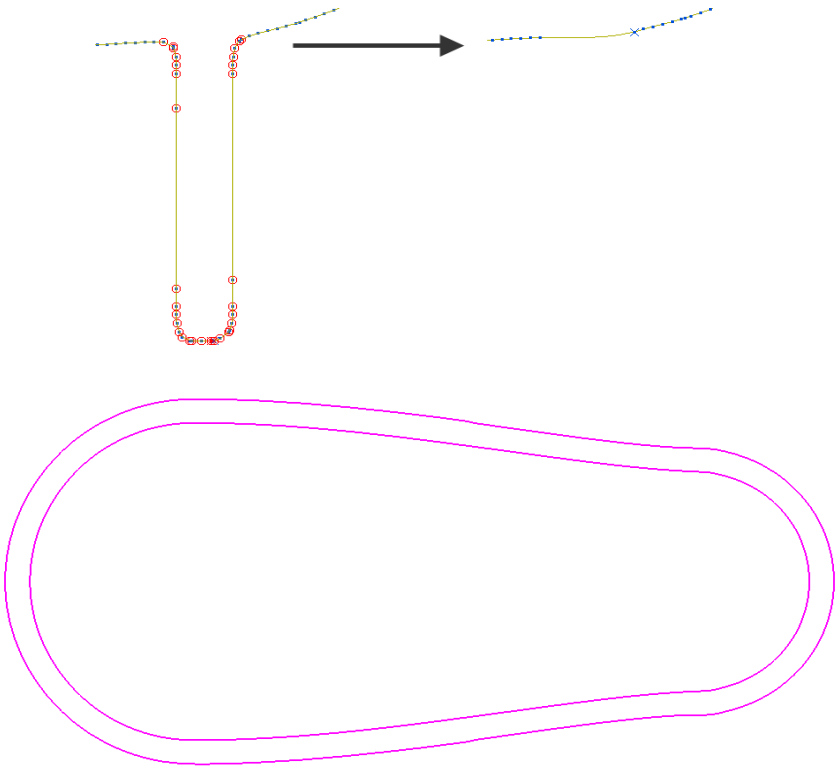

7 Click , to accept changes and exit the **Curve Editor**.

Other boundary editing options

Right-click on a **Boundary** in the graphics area or in the **PowerMILL *explorer*** and from the local menu, select **Edit** to view other boundary editing options.

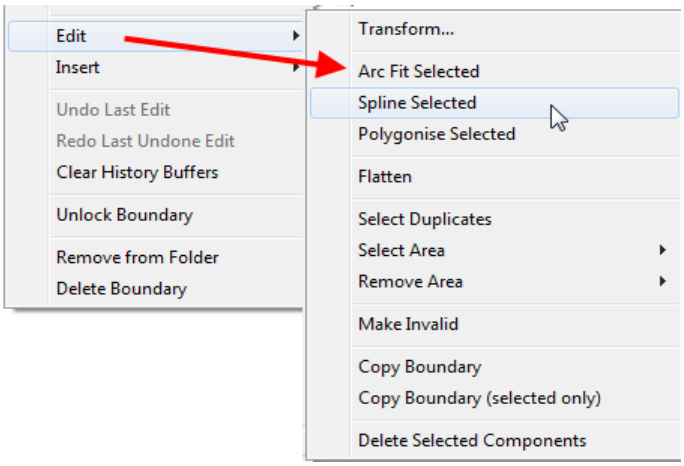

Review the modified Boundary

8 In the **PowerMILL explorer**, click the light bulb next to the copy of the original boundary **Master** created earlier. The original **boundary** is displayed alongside the edited **boundary**, **Rest** illustrating the effect of the 1mm 3D Offset.

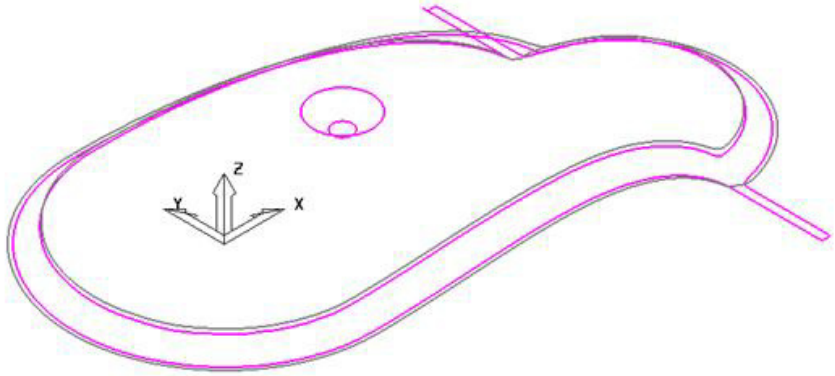

Create a 3D Offset strategy limited to the modified Boundary

9 **Activate** the **BN8** tool and **Boundary** named **Rest**.

10 On the **Main** toolbar, click to display the **Strategy Selector**.

11 From the **Finishing** options, select the **3D Offset Finishing** strategy.

12 In the **3D Offset Finishing** strategy dialog, enter data as below.

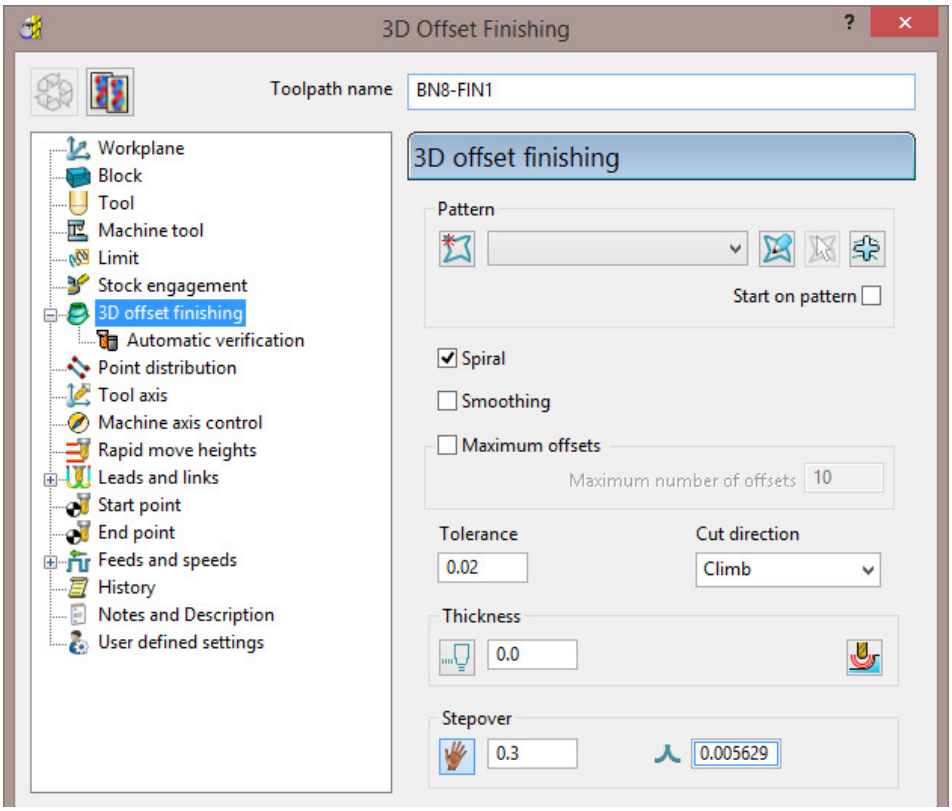

13 Click **Calculate** to process the toolpath and then **Close** to exit the dialog.

 Copyright © Delcam Ltd

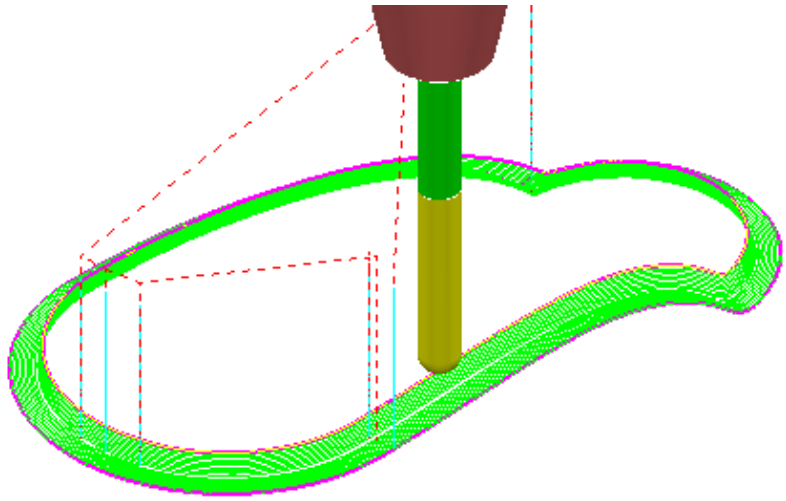

Create a Boundary for the original side branches.

14 Undraw the ***Toolpath*** **BN8-FIN1** and ***Boundary*** **Rest** by switching off the respective light bulb symbols in the **PowerMILL** ***explorer***.

15 Switch on the respective light bulb to display the **Boundary** named **Master**.

16 In the graphics area, select the ***outer segment*** of the displayed **Boundary** named **Master**.

17 In the **PowerMILL** ***explorer***, right-click the ***Boundary*** **Master** and select **Edit - Copy Boundary** (**selected only**) to create a new boundary **Master_1** consisting of the outer segment only.

18 **Rename** the boundary **Master_1** as **Spur1**.

19 Select a view from top **Z**.

20 In the **PowerMILL** ***explorer***, turn off the light bulb adjacent to the boundary **Master** to remove it from view.

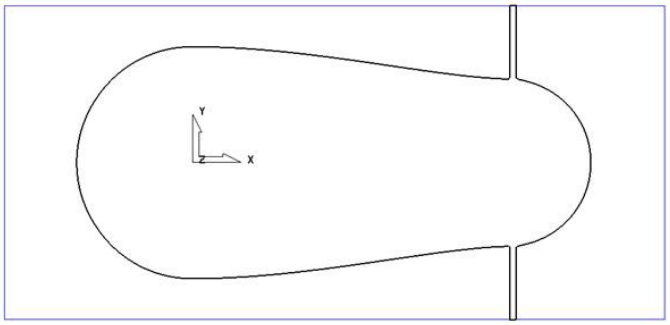

21 In the **PowerMILL** ***explorer***, right-click the boundary **Spur1** and select **Activate**.

22 In the graphics area, double-click the ***boundary segment*** to activate the **Curve Editor** toolbar.

23 Select all **points** along the ***boundary segment*** except those which define the rectangular part of the upper spur.

*Use the **Shift** key on your keyboard to select multiple points on the boundary segment.*

*Use the **CTRL** key on your keyboard to deselect one or more of the selected points on the boundary segment.*

If preferred it is okay to select and delete the points in stages.

24 On the **Curve Editor** toolbar:

a Click the **Delete Points** button to delete all the selected points.

b Select the ***points*** at the base of the rectangular segment.

c On the ***status bar*** (below the graphics area), click the ***Relative Move*** button and enter **0 -2** (for the X and Y move, values) in the data box and press ***Enter*** on your keyboard.

The selected points are moved by a distance of **Y-2**.

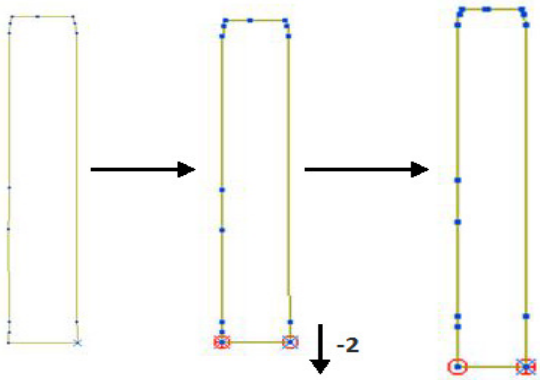

25 Click to exit the **Curve Editor** toolbar.

26 Click the light bulbs on to display both ***Boundaries*** **Rest** and **Spur1**, and then **Resize the View** .

 Copyright © Delcam Ltd

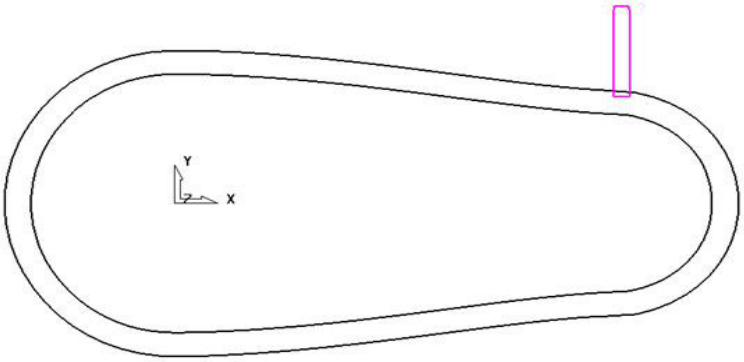

27 In the graphics area, double-click the ***Boundary* Spur1** to activate the **Curve Editor** toolbar.

28 Form the **Curve editor** toolbar, select **Transformations** - **Mirror** option .

29 On the **Mirror** toolbar select ***Origin at the active workplane***.

30 Ensure that the **Keep Original** option is set.

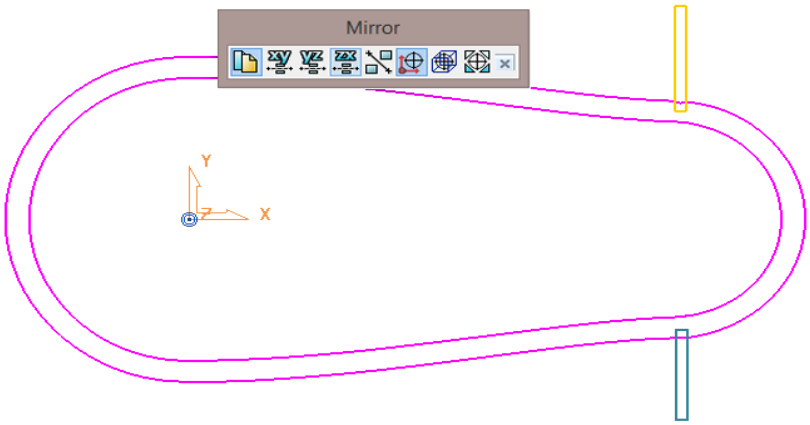

31 From the **Mirror** toolbar, click the ***Mirror in ZX*** button .

32 Click on the **Mirror** toolbar to accept and close.

33 On the **Boundary Transform** toolbar, click to accept and exit the toolbar.

The **Boundary** named **Spur1** now contains 2 segments.

1 Make sure that the ***tool* BN8** and ***boundary* Spur1** are both **Active**.

2 From the **Strategy Selector**, **Finishing** options, select the **Raster Finishing** strategy and enter data as shown on the following page:

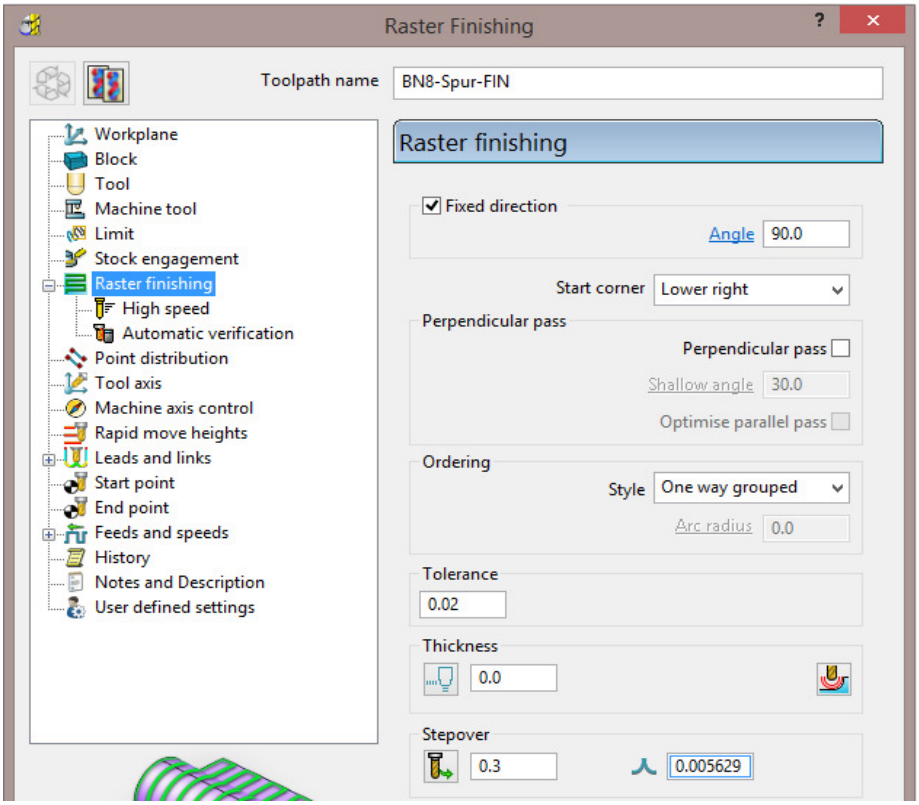

3 Click **Calculate** to process the toolpath, and then **Close** the dialog.

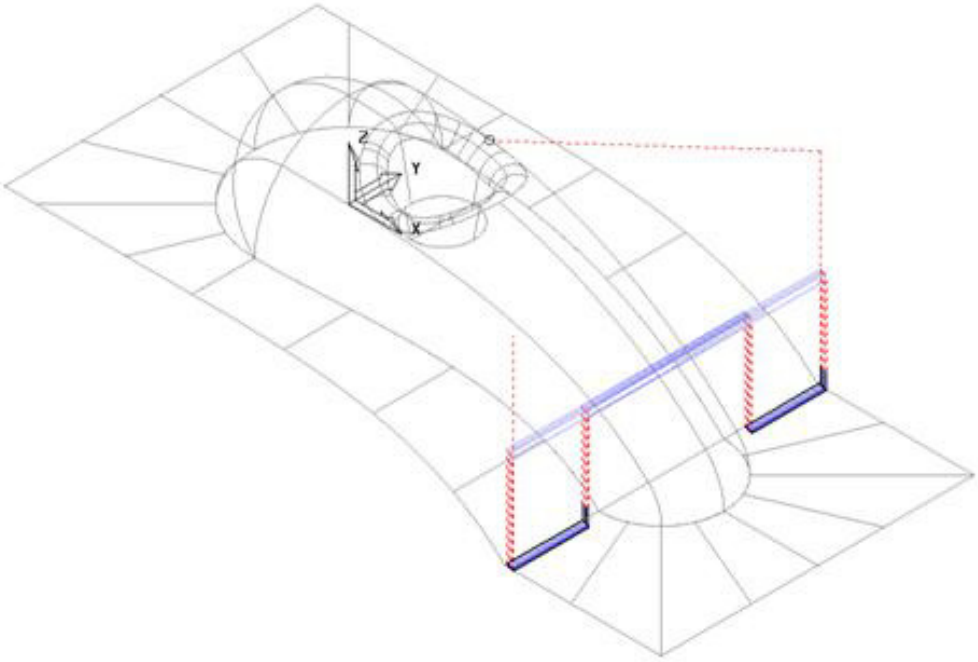

The machining strategies are localised with the help of edited **Boundaries** originating from the original **Rest Boundary** (**Master**).

 Copyright © Delcam Ltd

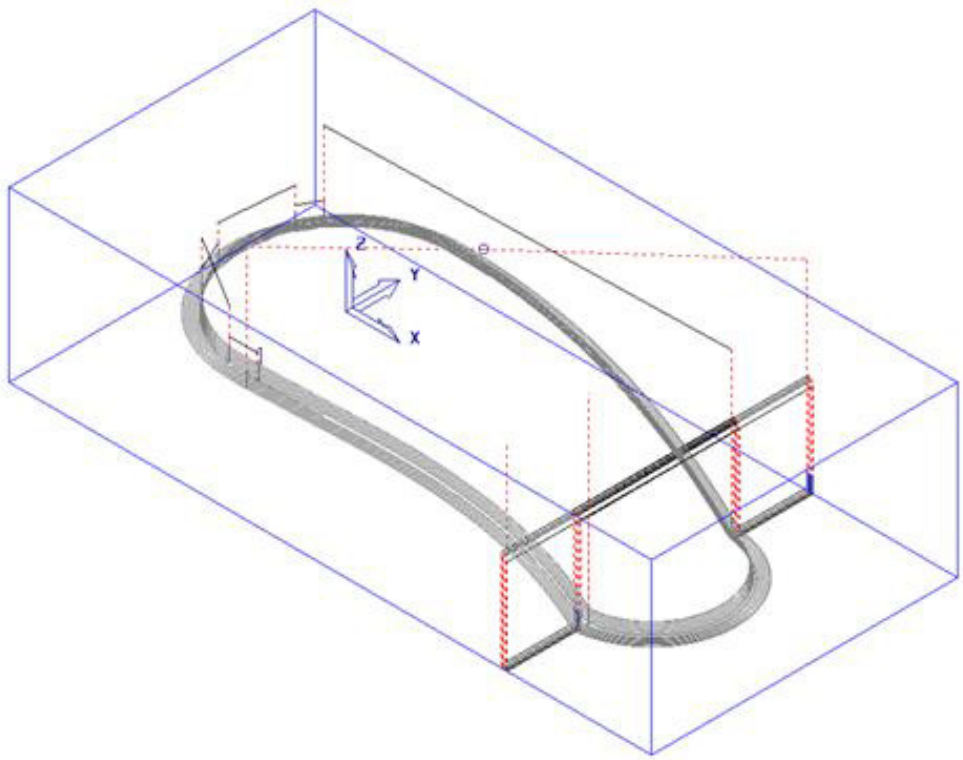

4 **Save** the **Project** to update:-

.....\COURSEWORK\PowerMILL_Projects\BoundaryBasics

Creating Blanking Surfaces using Boundaries

Blanking surfaces are used to cap holes and pockets in a model to prevent the tool from machining into those areas. You can create three types of planes in PowerMILL.

- **Block** – creates a plane, at a specific Z Height, after the material block is defined.
- **Best Fit** – creates two planes, one touching the boundary at its highest point, and the other through its lowest point. The planes are parallel to the best fit plane (the plane that has the smallest maximum distance from the boundary).
- **Projected** – creates a plane parallel to the XY axis of the active workplane. The plane will have the Z Height of the highest point of the boundary.

Example

1 Select **File - Delete All** and **Tools - Reset Forms**.

2 **Import** the **Model**:

.....\PowerMILL_Data\Models\pockets.dgk

3 **Calculate** the **Block** defined by **Box** to the **Model** Min/Max limits.

4 Select the ***top surface*** of the **model** (shown shaded).

5 In the **PowerMILL *explorer***, right mouse click on **Boundaries** and from the local menu select **Create Boundary – User Defined**.

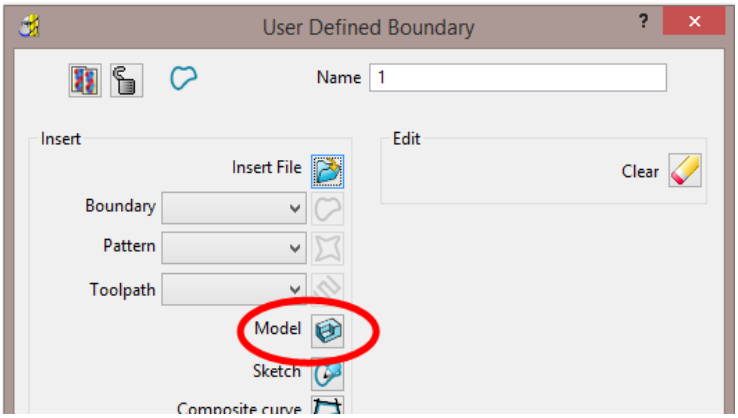

6 Click the **Model** icon and then select **Accept** to close the dialog.

7 Un-draw the **model** to enable a clear view of the **boundary**.

The **Boundary** produced has 4 segments. For this example, only the two smallest segments are required.

8 Select the two highlighted segments by dragging the cursor over them.

 Copyright © Delcam Ltd

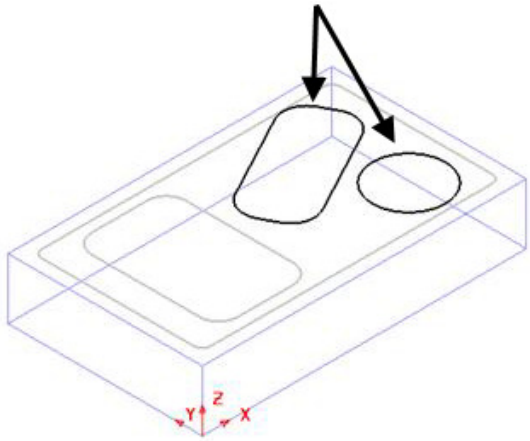

9 In the **PowerMILL *explorer***, right-click **Models** and from the local menu select **Create Plane - Projected**.

10 Switch on the **Plain Shade** model option.

11 Planer **Surfaces** have been created inside the selected ***boundary segments***.

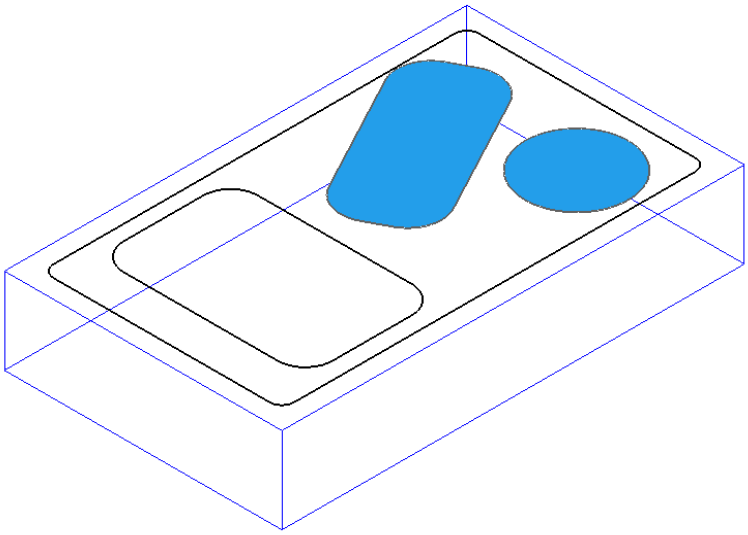

No need to Save the Project this time!

12 Select **File - Delete All** and **Tools - Reset Forms**.

Exercise

Import the **Model** **...\PowerMILL_Data\Models\bucket.dgk** and generate 4 surface planes to cover the foot recesses on the upper base surface.

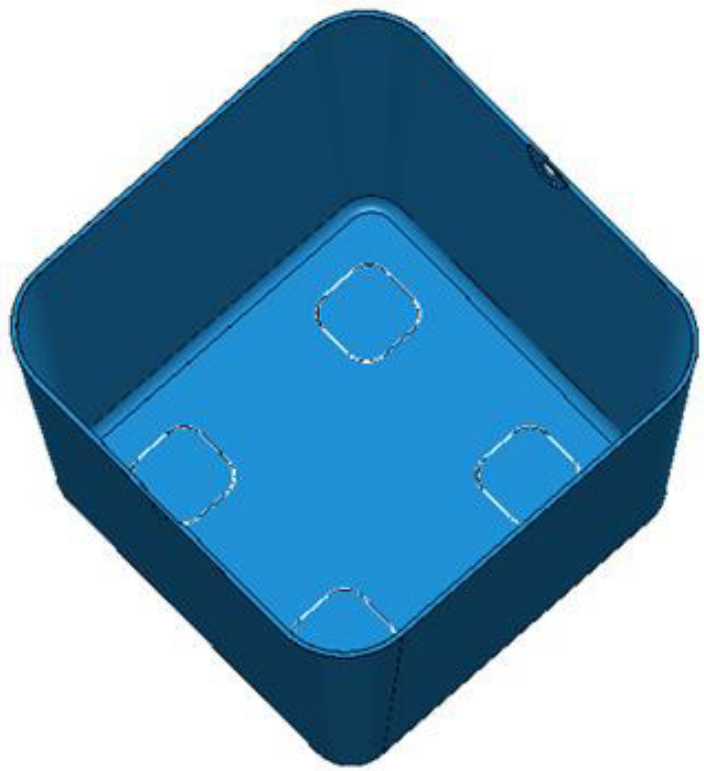

No need to Save the Project this time!

1 Select **File - Delete All** and **Tools - Reset Forms**.

 Copyright © Delcam Ltd

Block defined by Boundary

An existing **Project** will be opened that contains multiple components that will be roughed out using a complex **Block** arrangement defined by **Boundary** segments.

2 Select **File** – **Delete All** and **Tools** - **Reset Forms**.

3 **Open** the (read-only) **Project**:-

…\PowerMILL_Data\Projects\MultiBlock_Start

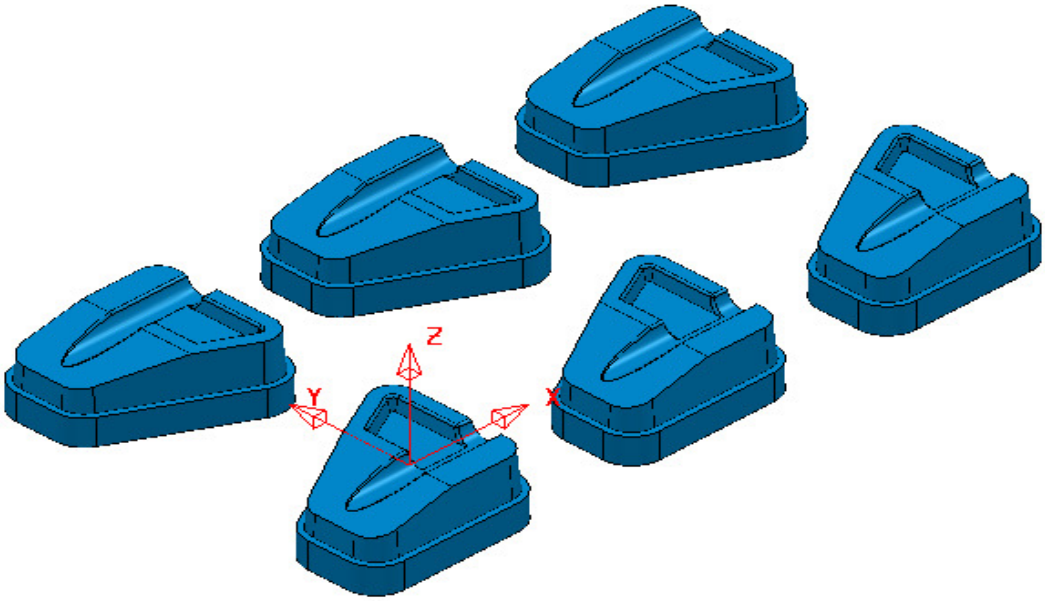

4 Save the **Project** as:-

….\COURSEWORK\PowerMILL_Projects\MultiPart_Block

5 Select all of the component models (Drag a box over all **surfaces**).

6 In the **PowerMILL *explorer*** right mouse click on **Boundaries** and from the local menu select **Create Boundary** - **User Defined**.

7 In the ***User Defined Boundary*** dialog ensure that the ***Allow Boundary to be private*** box is ***un-ticked*** and then click on the **Model** icon .

8 Select **Accept** to close the ***User Defined Boundary*** dialog.

9 **Activate** the new **Boundary**.

10 From the main toolbar select the **Block** options .

11 In the dialog select ***Defined by*** **- Boundary** and ***Type*** **– Model** followed by **Calculate**.

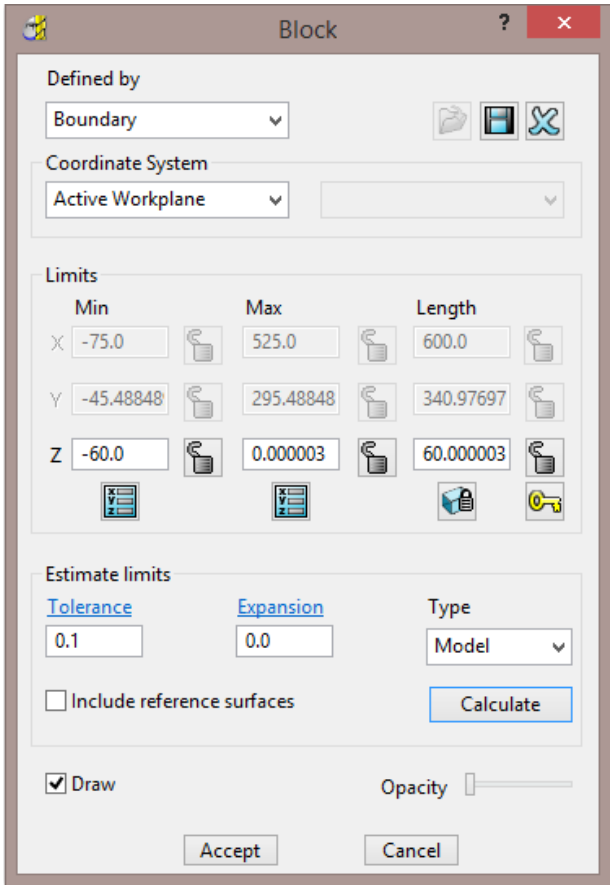

12 Select **Accept** to close the **Block** dialog.

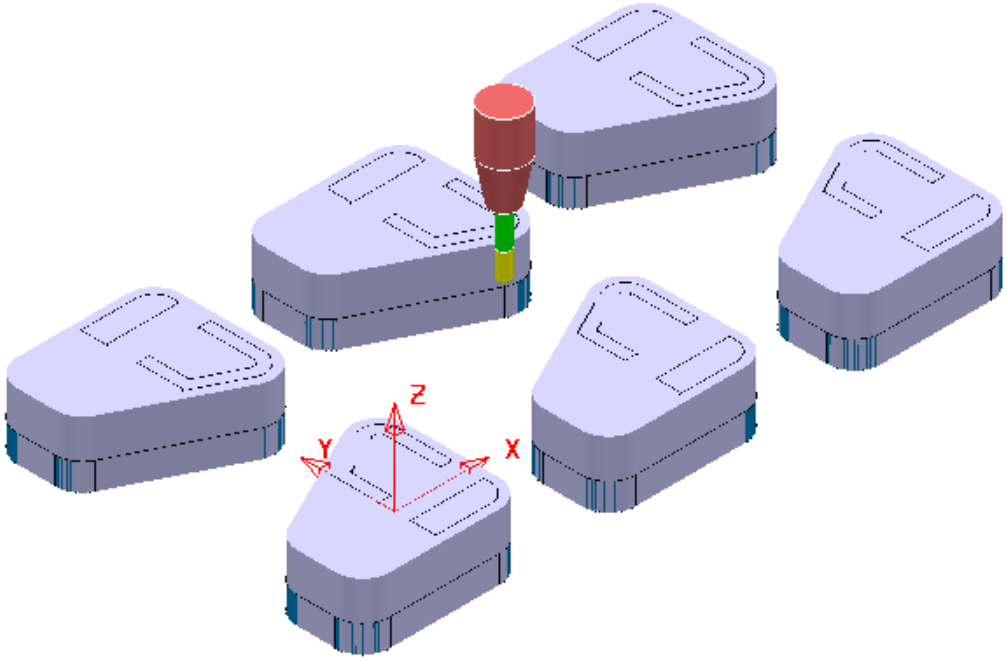

The complex **Block** is as shown above consisting of localised triangle models around each individual component.

 Copyright © Delcam Ltd

13 De-activate the **Boundary**.

14 In the **PowerMILL *explorer*** right mouse click on the existing, un-processed toolpath **D12TR1-RGH1** and from the local menu select **Edit** – **Set Named Parameter**.

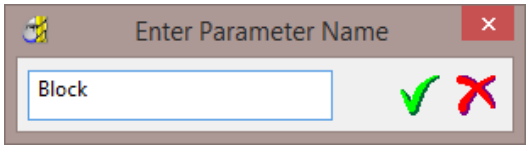

15 Input **Block** and select the ***green tick*** to accept.

The current **Block** definition will now be active within the unprocessed **Model Area Clearance** strategy.

16 In the **PowerMILL *explorer*** right mouse click on **Toolpaths** and from the local menu select **Batch Process**.

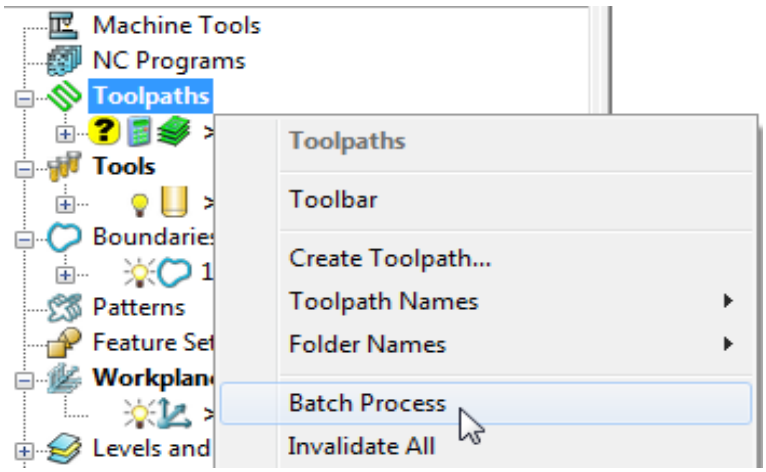

Batch Process will sequentially run down the ***toolpath list*** (in this case 1) and **Calculate** all valid, un-processed strategies.

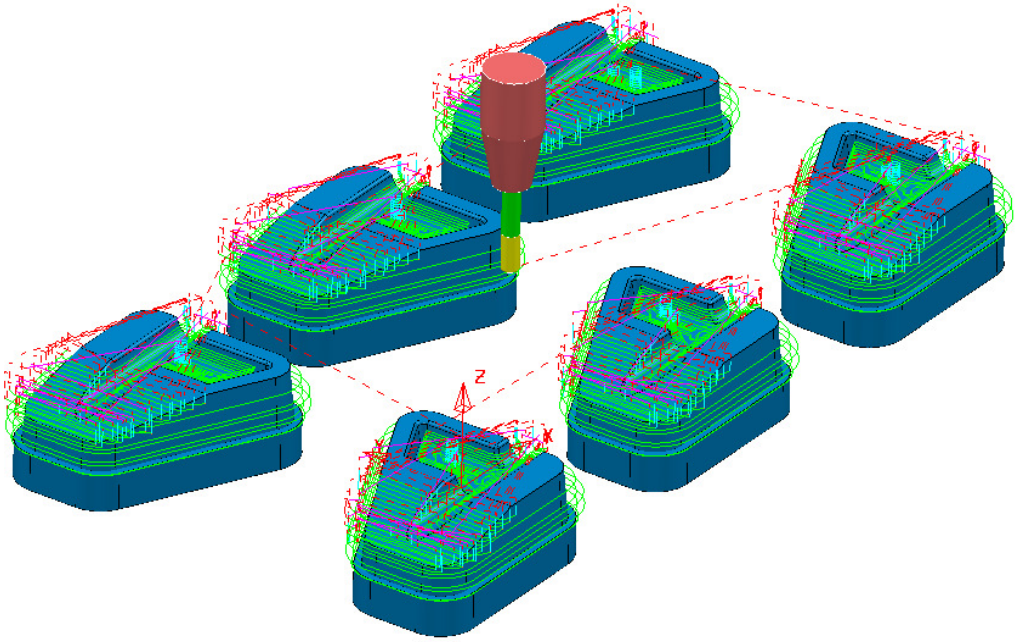

17 Select **File** - **Save Project** to update:-

…\COURSEWORK\PowerMILL_Projects\MultiPart_Block

Private Boundaries

All **Boundary** types will (by default) be created as **private**. This makes the **Boundary** exclusively owned by an individual machining strategy. If the ***parameters*** or ***entities*** used in the strategy are modified, then the associated **private boundary** will automatically adjust on calculation.

Private Boundaries are of particular use in **Templates** as they will automatically regenerate when the host **toolpath** is calculated on a new model.

A **private boundary** is not suitable in cases where the ***segments*** will need to be deleted or geometrically edited once assigned to the host ***strategy***. It is however possible to create a copy on which you can ***switch off*** the **Allow boundary to be private** option within the dialog.

It is also possible to prevent **Boundaries** from being created as private:-

From the **main** pull down menus select ***Tools*** – ***Options*** – ***Boundaries*** - ***Private Boundaries***, and un-tick **Allow new boundaries to be private**.

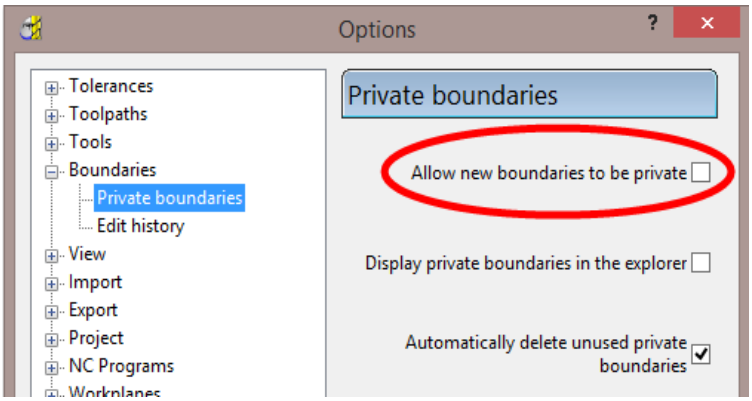

Private Boundaries – Example:-

1 Select **File - Delete All** and **Tools - Reset Forms**.

2 **Open** the (readonly) **Project**:-

.....\PowerMILL_Data\Projects\PrivateBoundaries_Start

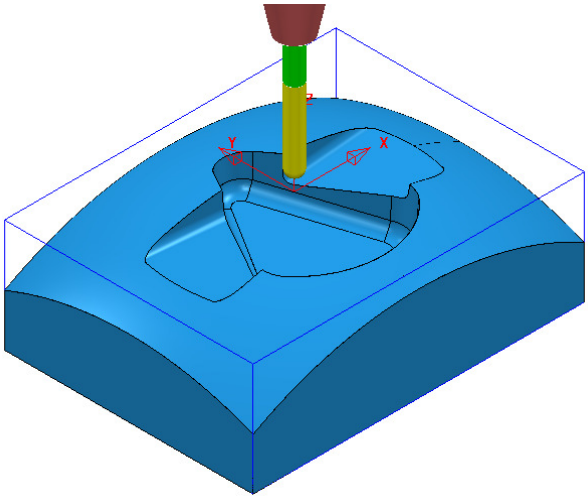

3 **Save Project As**:-

.....\COURSEWORK\PowerMILL_Projects\PrivateBoundaries-EX1

 Copyright © Delcam Ltd

The **Project** includes a **Constant Z** and a **3DOffset *finishing*** toolpaths both of which currently apply over the whole of the **Block** area. To localise the 2 finishing toolpaths to areas of the model where they are most effective both strategies will be recycled to include a **Shallow** – ***private boundary***.

4 From the **main** pulldown menus select **Tools** - **Options** - **Boundaries** - **Private boundaries**:-

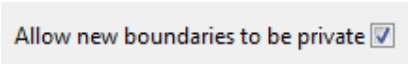

5 **Tick** the box named **Allow new boundaries to be private**.

6 Select **Accept** to close the **Options** dialog**.**

7 **Activate** the ***toolpath***, **BN10-CZ-SEM1**.

8 From the ***toolpath***, **Bn10-CZ-SEM1** local menu select **Settings**, followed by the ***Recycle*** option.

9 In the **Constant Z** dialog select the **Limit** page.

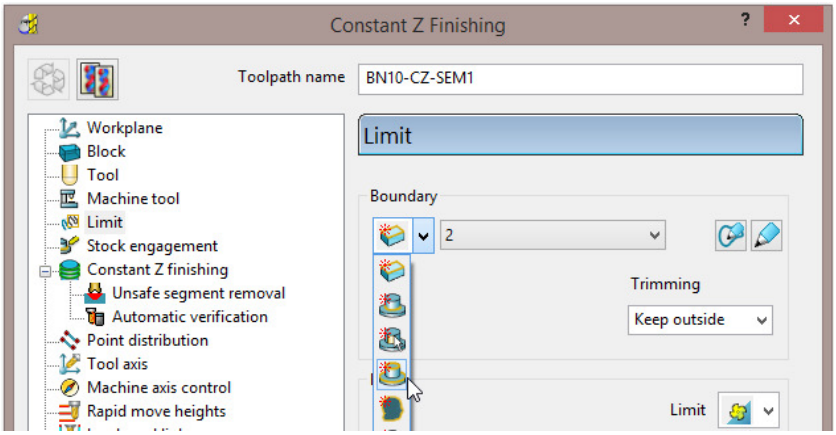

10 From the ***Boundary*** pull down options select **Create a shallow boundary**.

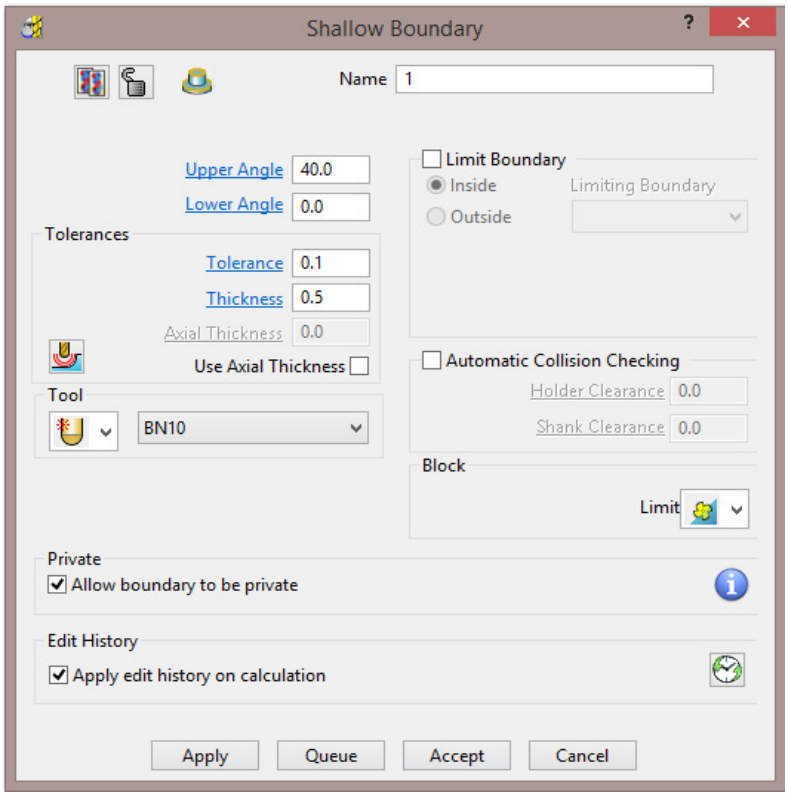

11 Using the default settings **Apply** and **Accept** the **Shallow Boundary** dialog.

Initially the new **Boundary 1** will exist in the **PowerMILL *explorer*** until the toolpath is calculated. At that point it will disappear (become invisible) from the **Boundary** folder. However, the folder name, **Boundary** will still be displayed in bold text to identify the existence of the hidden ***private* Boundary 1**

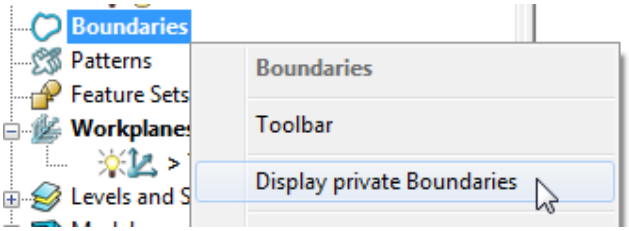

*The **private Boundary** will be displayed in the **PowerMILL explorer** if the above option is **ticked** in the local **Boundaries** menu.*

12 Select the **Limit** page and set ***Trimming*** to **Keep outside**.

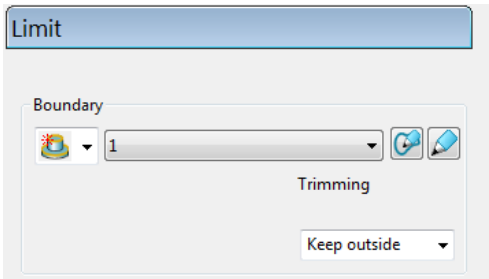

13 **Calculate** (but <u>do not</u> **Close**) the **Constant Z Finishing** strategy.

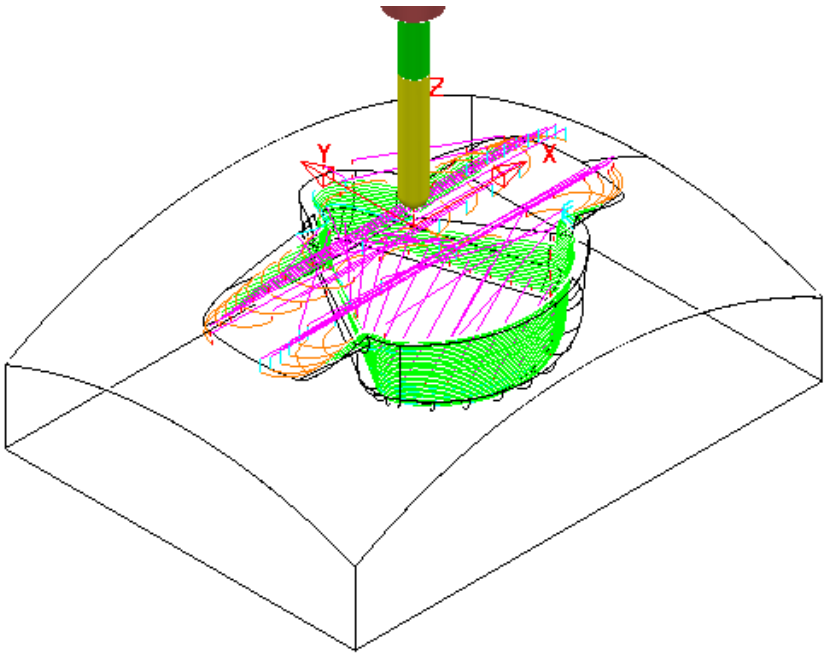

The **Constant Z** strategy **BN10-CZ-SEM1** is now limited to be ***outside*** the segments of ***private* Boundary 1**

 Copyright © Delcam Ltd

14 Select the 'create a copy' option in the **Constant Z Finishing** dialog.

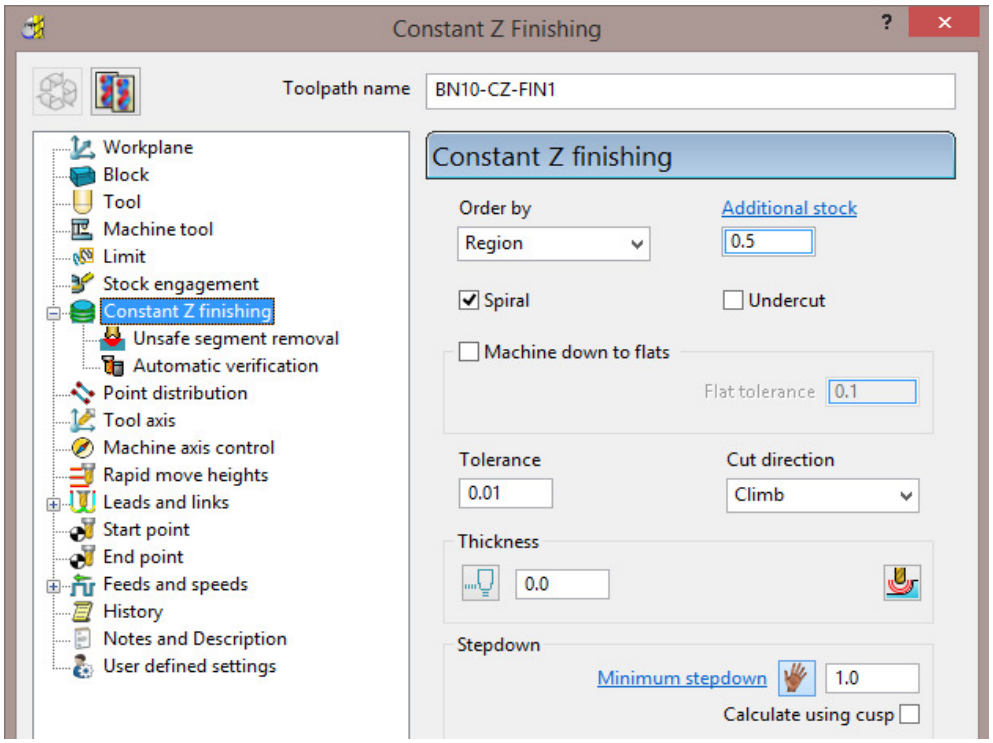

15 Modify the ***Toolpath Name*** to **BN10-CZ-FIN1**, input ***Tolerance*** **0.01**, ***Thickness*** **0**, and **Minimum stepdown** **0.3**

16 **Calculate** the new toolpath and **Close** the dialog.

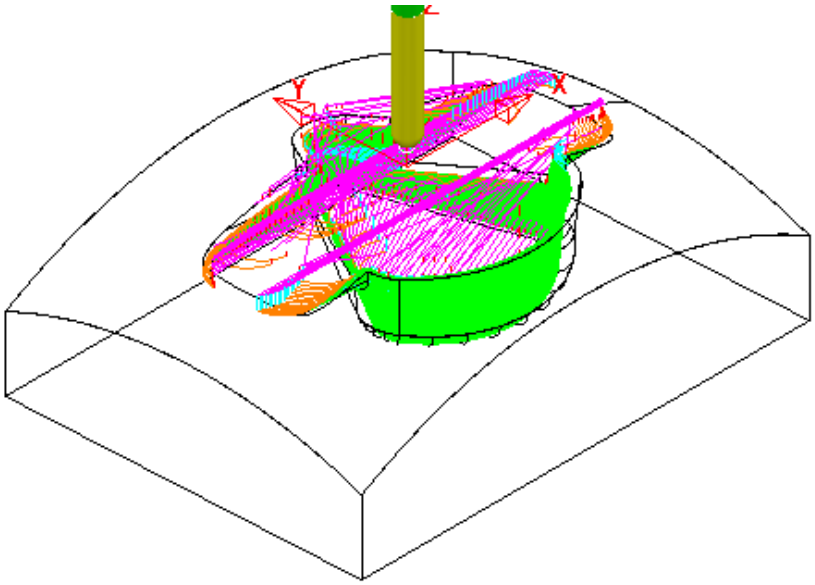

17 A new ***private*** **Boundary** will automatically, be created with the same parameters (**Tolerance**, **Thickness**, etc) as used in the ***main*** page of the **Constant Z Finishing** dialog.

18 In the **PowerMILL *explorer***, right mouse click on **Boundaries** and from the local menu **tick** the option **Display private Boundaries**.

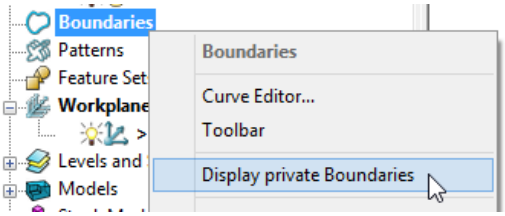

19 With the 2 existing ***private*** **Boundaries** displayed, right mouse click on either and from the local menu select **Edit** – **Copy Boundary**.

20 Right mouse click on **Boundaries** and from the local menu **untick** the option **Display private Boundaries**.

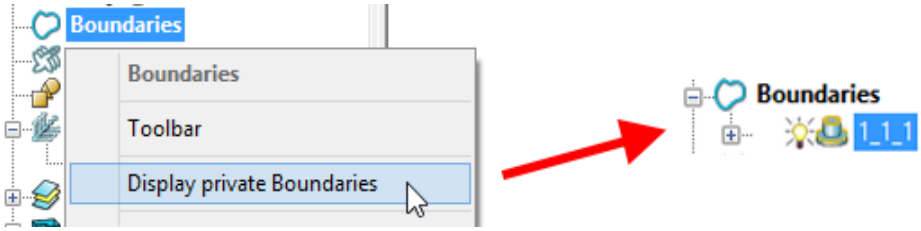

Only the new ***private*** **Boundary** will be displayed in the **PowerMILL *explorer*** but will later become hidden once it has been applied in a new toolpath calculation.

Exercise

21 In the **PowerMILL *explorer***, **Activate** the toolpath **BN10-3Doff-SEM1** and then select **Settings** to open the dialog.

22 ***Recycle*** with the new ***private*** **Boundary 1_1_1**, **Active** and with ***Trimming*** set to **Keep inside**.

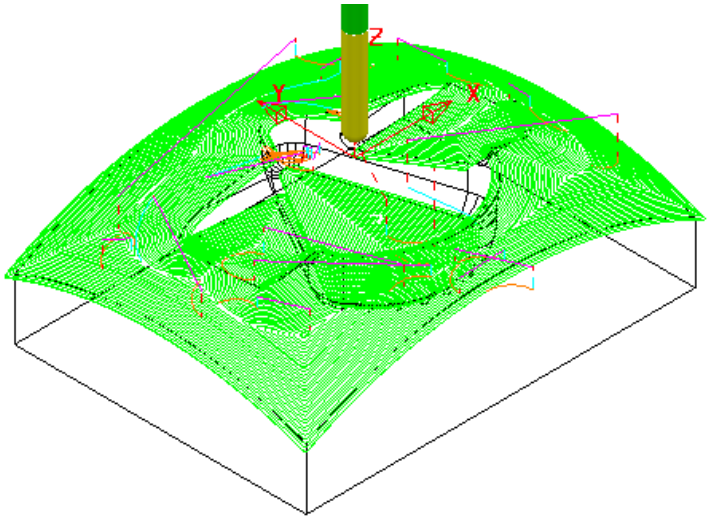

 Copyright © Delcam Ltd

23 **Calculate** a ***Copy*** of the above toolpath with the new ***Name*** **BN10-3Doff-FIN1** and with **Tolerance 0.01**, **Thickness 0**, and **Stepover 0.3**

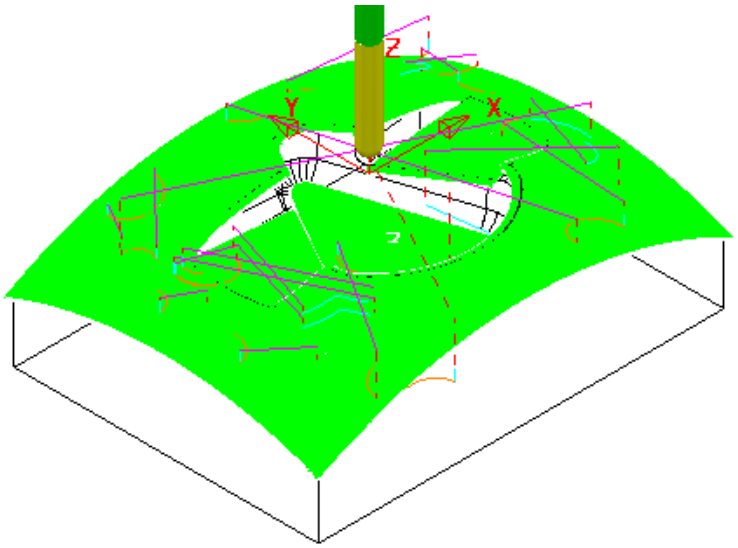

24 From the **main** pulldown menus select **Tools** – **Options** and in the dialog select **Boundaries** – **Private boundaries**.

25 **Tick** the box named ***Display private*** **boundaries** ***in the explorer***.

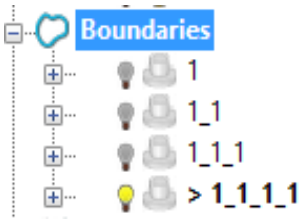

*This demonstrates that if a **toolpath** containing a **Private Boundary** is copied then the new one will contain a separate **Private Boundary**.*

 Copyright © Delcam Ltd

7. Levels and Sets

Levels and **Sets** allow you to control the selection and display of model components in the **PowerMILL** graphics area.

You can ***Acquire*** components from the currently imported **Model** to a **Level** or **Set**. Once acquired to a **Level** or **Set**, you can select, de-select, display, or hide ***Model components*** from the individual **Level** or **Set** context menus.

The subtle differences between Levels and Sets are illustrated using the following examples.

Creating Levels

1. From the **Main** menu, select **File** > **Delete All** and **Tools** > **Reset Forms**.
2. Select **File** > **Import Model**:

   .....\PowerMILL_Data\Models\CowlingWithClamps.dgk

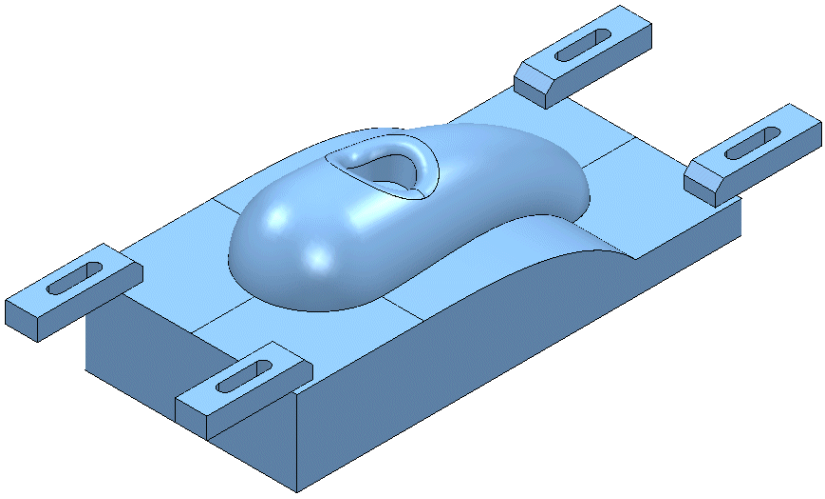

The imported **Model** includes clamps, which:

- Must be avoided by all machining strategies created in the **Project**.
- Must not be included in the calculation of the **Block**.

To make the model selection easier, a new **Level** named **Clamps** will be created and all clamp surfaces assigned to it. Another **Level**, named **Splits** will be created and all 6 split surfaces assigned to it.

3. In the **PowerMILL** ***explorer***, right-click **Levels and Sets** and select **Create Level**.

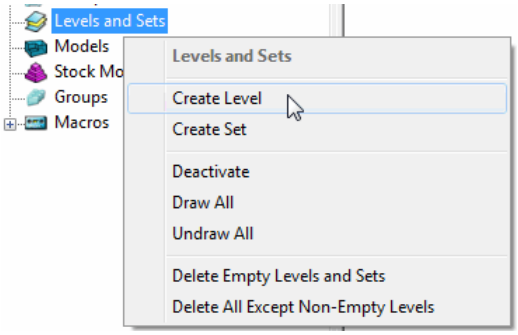

4 **Rename** the new **Level** as **Clamps**.

5 Create another new **Level** and **Rename** it as **Splits**.

All **model** components are currently acquired to the default ***General*** **Level**.

If the original CAD model has components already assigned to different **Levels**, then these will be recreated when the **model** is imported into the **PowerMILL project**.

Acquiring model entities to a Level

6 In the **PowerMILL** ***explorer***, click the 'light bulb' off next to the **Level** named ***Clamps***.

Any items acquired to this **level** will no longer be displayed.

7 In the graphics area, use the ***left mouse*** and ***Shift*** keys to select all **surfaces** except the clamps.

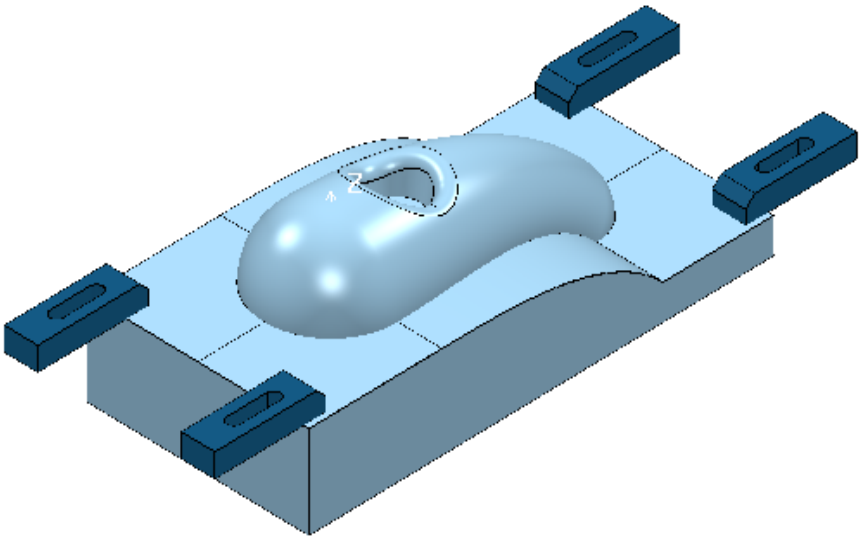

8 On the keyboard select **Ctrl J** to ***blank*** the selected **Surfaces**.

 Copyright © Delcam Ltd

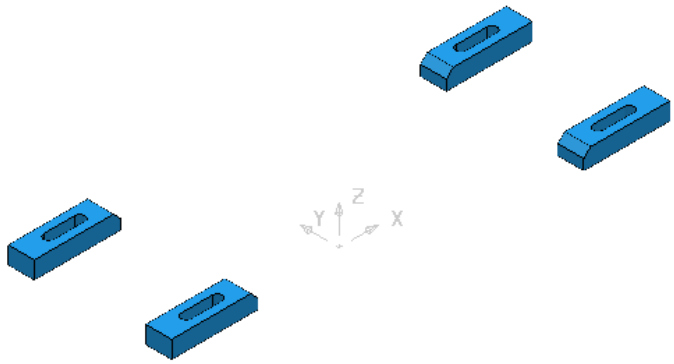

9 Select the ***Clamp*** surfaces (Hold down the left hand mouse key while dragging a box over them).

10 In the **PowerMILL *explorer***, right-click on the **level** named ***Clamps*** and select ***Acquire Selected Model Geometry***.

The clamps disappear from the view (The **Level** is switched off).

11 On the keyboard select **Ctrl L** to ***unblank*** all eligible **Surfaces**.

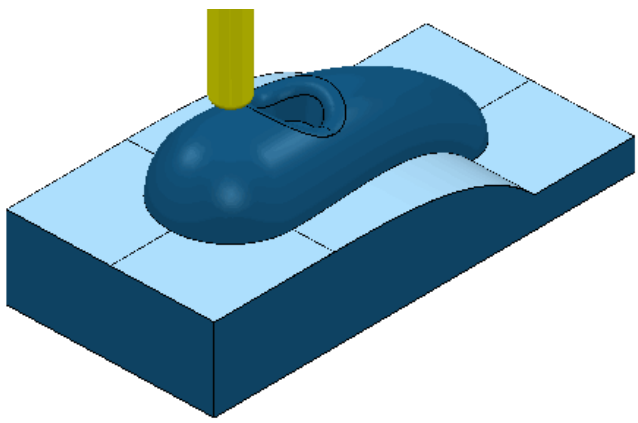

12 Select the 6 **Surfaces** defining the split face and ***Acquire*** them to the level named ***Splits***.

13 Switch off the **level** named ***Splits*** to visually check that the correct **surfaces** have been acquired.

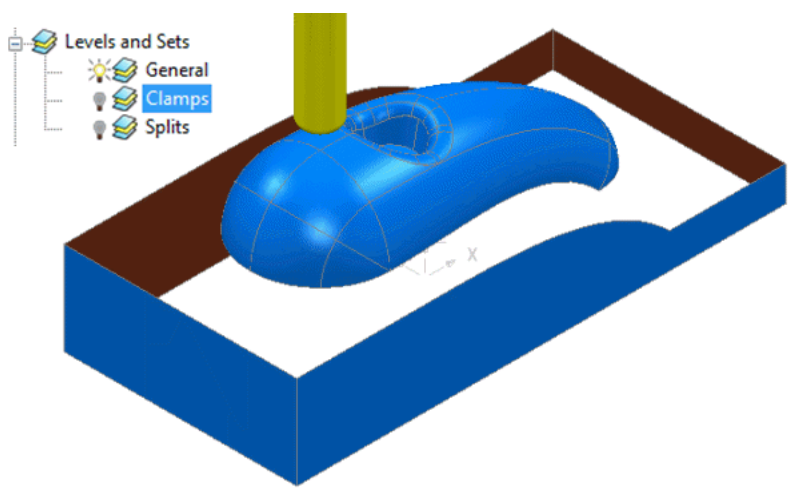

14 Switch on all **levels** (The clamps and split **surfaces** reappear).

A **Selected Surface Boundary** will now be created to **limit** the clamps from being machined.

1. In the **PowerMILL *explorer***, right-click the **Level**, ***General*** and choose **Select Surfaces**. The main component **surfaces** excluding the split faces are selected.
2. While still in the **PowerMILL *explorer***, right-click the ***Splits* level** and choose **Select Surfaces**. The split face surfaces are added to the current selection.
3. Create a Dia 12 Ball Nose tool named **BN12**.
4. **Calculate** a **Block** using the default **Box** and **Model** options.
5. Use the default **Rapid Move Heights** and **Start and End Point** options.

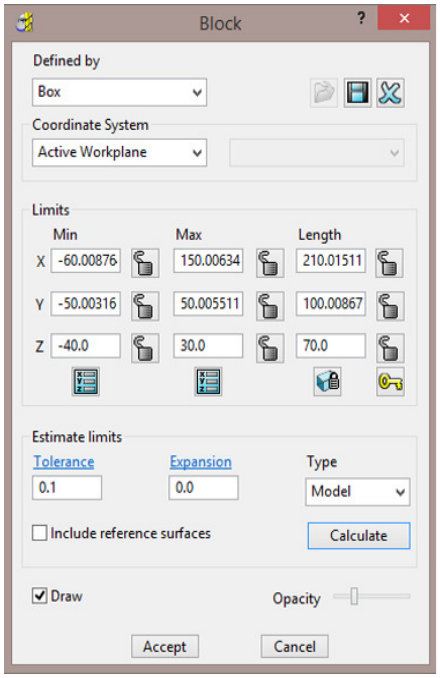

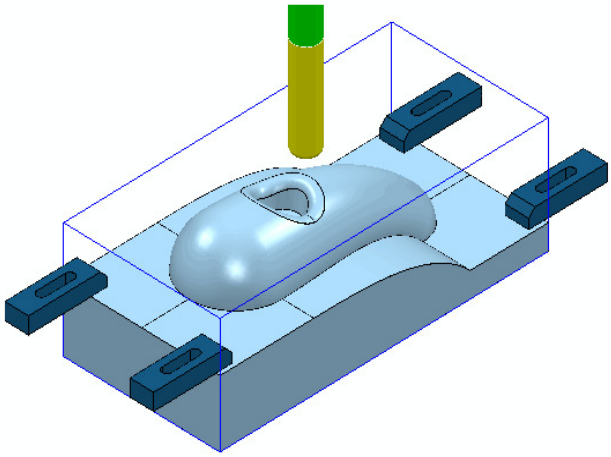

The **Block** is created to the dimensions of the selected surfaces.

6. Left mouse click in the graphics area away from the **model** to deselect all entities.
7. In the **PowerMILL *explorer***, click on the **Level**, **General**, and with the **Ctrl** key held down, click on the ***Splits* level**.

   Both the selected **levels** will be highlighted in the **PowerMILL *explorer***.

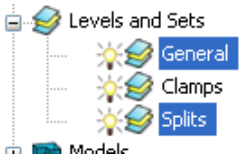

8. Right-click on one of the highlighted levels and choose **Select Surfaces**. All **surfaces** excluding the clamps are selected.
9. Right mouse click on **Boundaries** in the **PowerMILL *explorer***.
10. From the local menu select **Create Boundary** - **Selected Surface Boundary** with **Radial Thickness 2**, **Limit** set to ***Block Edge***, with ***Allow boundary to be private*** un-ticked.

 Copyright © Delcam Ltd

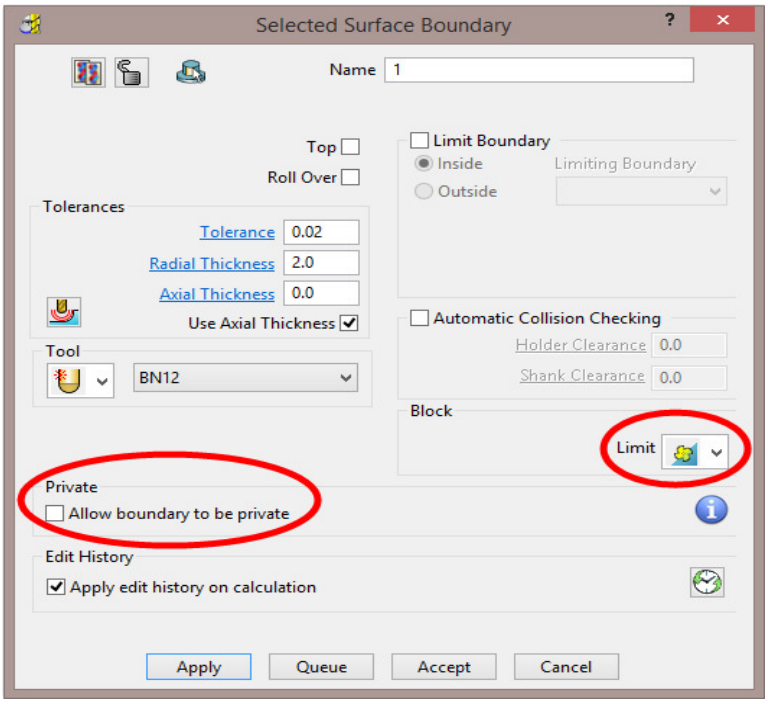

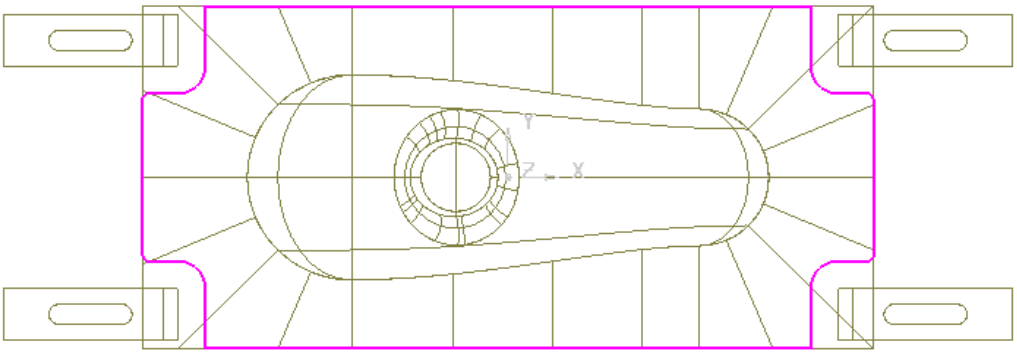

11 Check that both the **Tool *BN12*** and **Boundary *1*** are **Active** so that they will be automatically included when a new machining strategy is created.

12 From the **main** toolbar, select **Toolpath Strategies** and from **Finishing** open a **Steep and Shallow Finishing** strategy.

13 In the **Steep and Shallow Finishing** dialog, enter data exactly as shown in the following illustration.

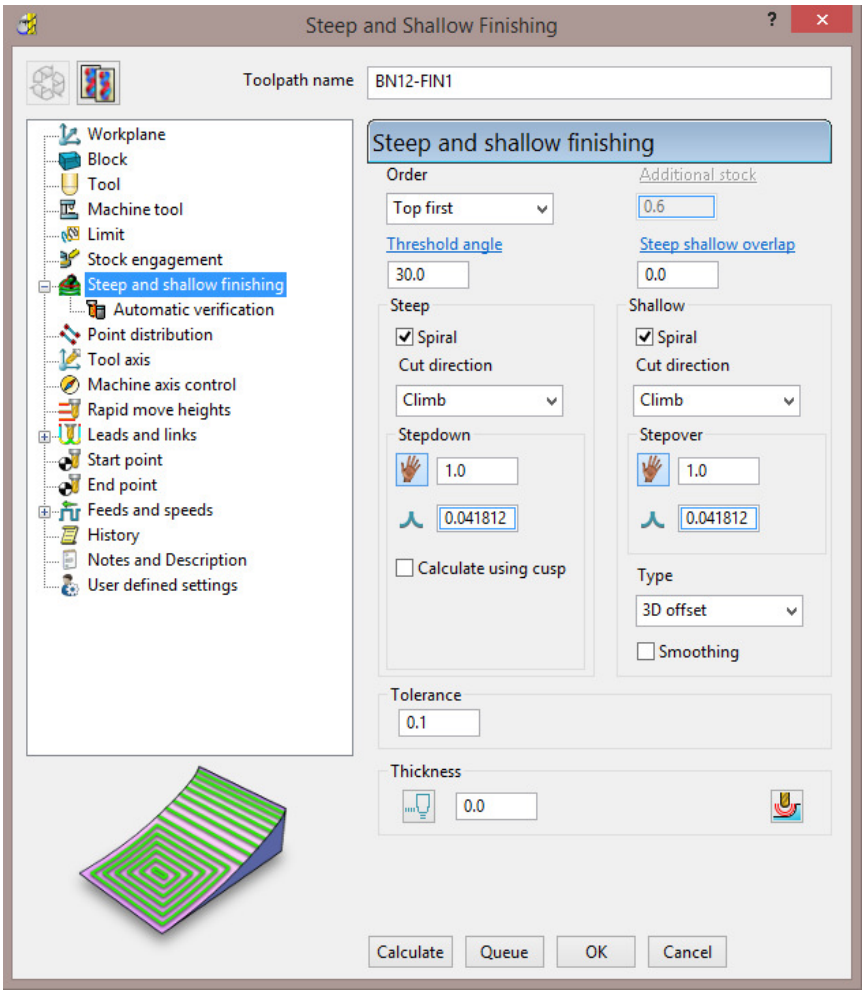

14 Click **Calculate** to process the **toolpath** and then **Close** the dialog.

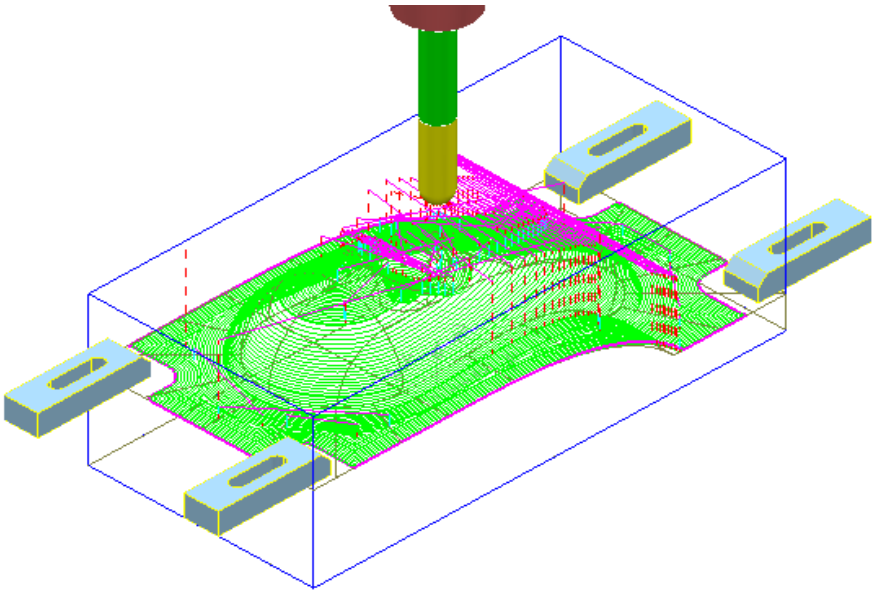

The **Radial Thickness** of **2** used in the outer **Boundary** ***segment*** provides a suitable clearance around the clamps.

 Copyright © Delcam Ltd

Switching Off a Level

1. In the **PowerMILL** ***explorer***, switch off the light bulbs on both the **General** and **Splits** levels.

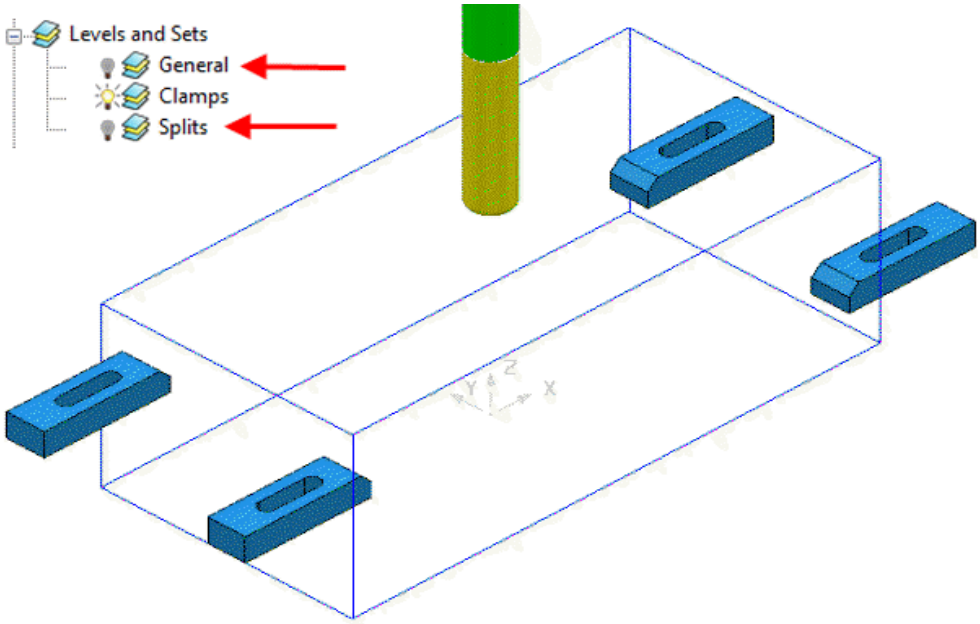

Only the ***Clamp*** **Surfaces** are displayed in the graphics area.

2. Right-click the **toolpath** and select **Settings** to re-open the dialog.
3. Select create a ***Copy*** and click **Calculate** to process a new **toolpath**.
4. **Close** the **Raster Finishing** dialog.

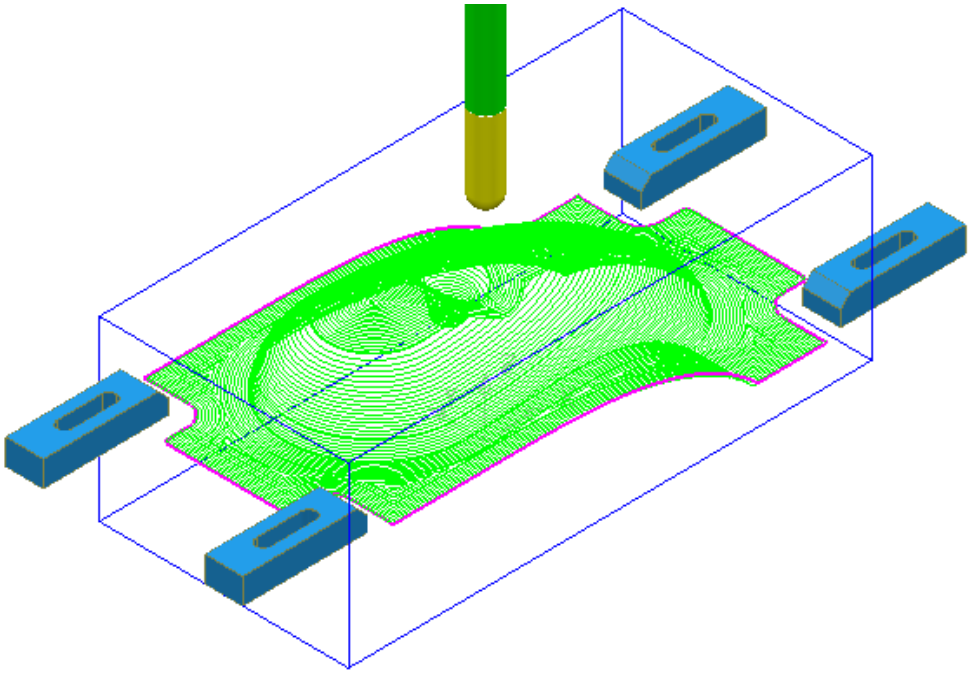

Even if a ***level*** *is switched off,* ***PowerMILL*** *will still create a toolpath over all (including un-displayed) parts of the model.*

Sets

A **Model** entity will always exist on a **Level** but not on more than one at the same time. You cannot delete a **Level** while **Model** entities are acquired to it.

A **Model** entity can co-exist on more than one **Set** at the same time. You can delete a **Set** while **Model** entities are acquired to it.

1 From the **Main** menu, click **File** > **Delete All** and **Tools Reset Forms**.

2 From the **Main** pulldown menus **File** > **Import Model** and select:

.....\PowerMILL_Data\Models\YogurtTray.dgk

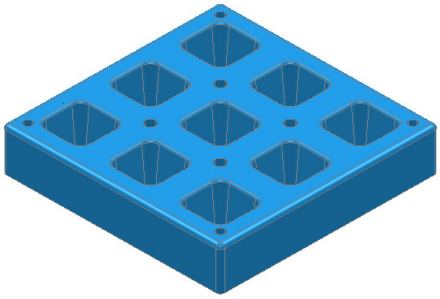

3 In the **PowerMILL** ***explorer*** right mouse click on **Levels and Sets**.

4 From the local menu, select **Create Set** and rename it as **AllPkts-Set**.

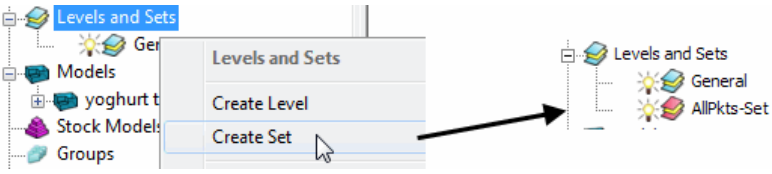

5 Manually select all **surfaces** defining the 9 pockets.

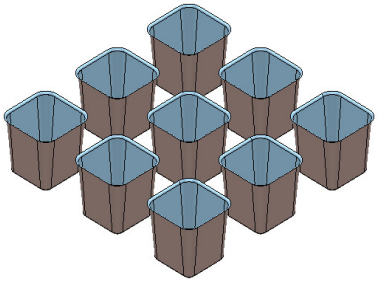

6 With the 9 pockets still selected, right-click **AllPkts-Set** and select **Acquire Selected Model Geometry**.

7 Manually select all **surfaces** defining the bottom left pocket.

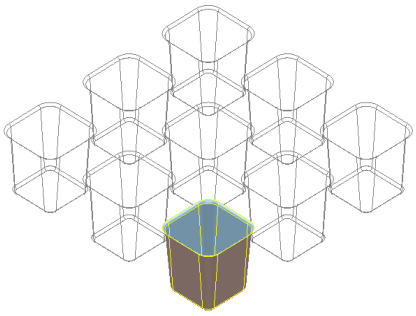

 Copyright © Delcam Ltd

8 Create a new **Set** and rename it as **Pkt1-Set**.

9 Right-click **Pkt1-Set** and select **Acquire Selected Model Geometry**.

10 On the keyboard select **Ctrl L** to ***unblank*** all invisible **Surfaces**.

11 Switch off both the **level *General*** and the **Set *Pkt1-Set***.

12 Switch on **AllPkts-Set**.

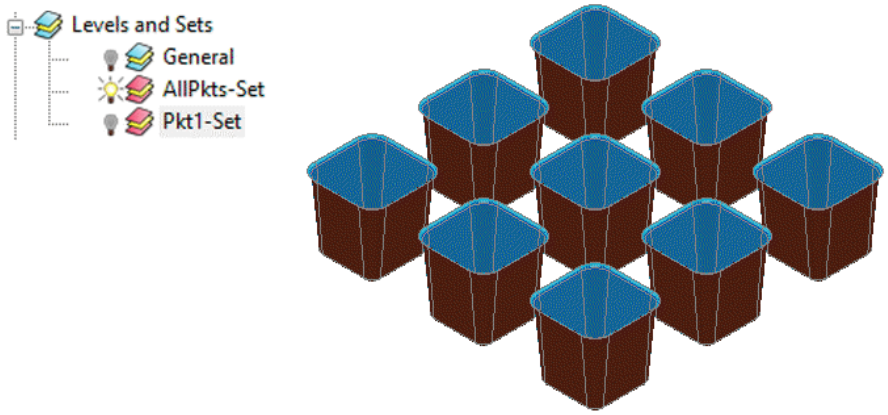

The **surfaces** currently acquired to **AllPkts-Set** are displayed, including those that exist on the visually 'switched off' **Set**.

13 Switch off the **Set *AllPkts-Set*** and then switch on the **Set *Pkt1-Set***.

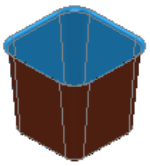

The **surfaces** acquired to **Pkt1-Set** are displayed. They are also displayed when the **AllPkts-Set** is switched on and **Pkt1-Set** is switched off. This illustrates that model entities can be acquired to more than one **Set** at the same time.

1 Switch off both **Sets** and switch on the **Level General**.

2 In the **PowerMILL *explorer*** right-click on **Pkt1-Set** and from the local menu click **Select Surfaces**.

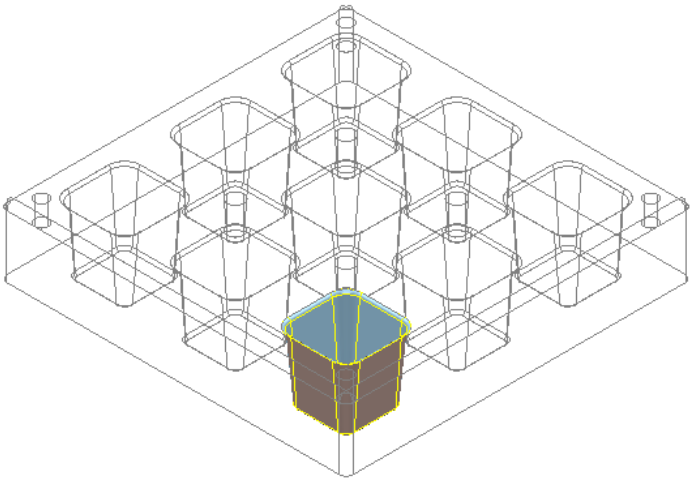

3 Create a new **Level** and rename it as **Pkt1-Level**.

4 Switch of the light bulb symbol next to the new **Level *Pkt1-Level***.

5 In the **PowerMILL *explorer***, right-click ***Pkt1-Level*** and select **Acquire Selected Model Geometry**.

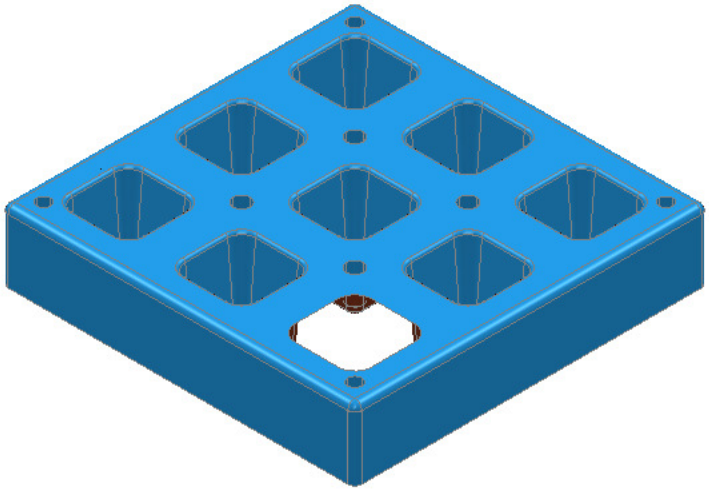

The **surfaces** defining the bottom left pocket disappear from the view on being acquired to the (switched off) **level *Pkt1-Lev***. This illustrates that unlike **Sets**, it is not possible for **model** entities to co-exist on more than one **Level** at any one time.

6 Switch on the **level *Pkt1-Lev*** and the bottom left pocket surfaces are displayed again.

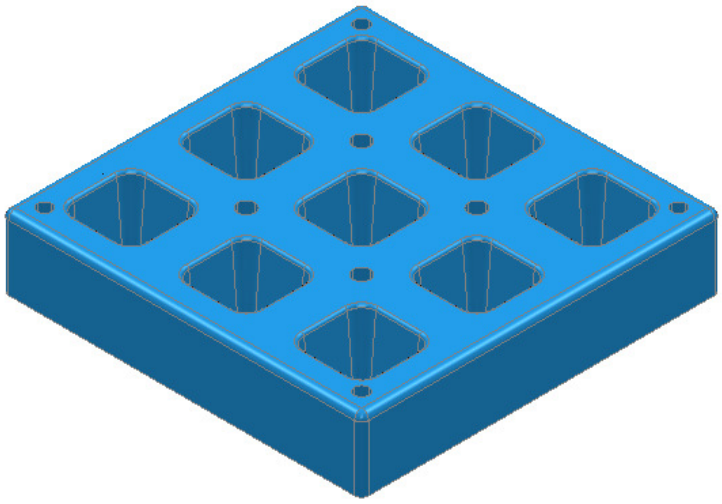

*When using a combination of **Levels** and **Sets** it is good practice to keep the **Sets** visually switched off. If you want to select items from a particular **Set**, then, right-click on it and use one of the **Select** options from the context menu.*

*This prevents confusion if you switch a **Level** off only to find the included items are still visible due to a **Set** containing the same items being switched on.*

 Copyright © Delcam Ltd

8. Editing Toolpaths

There is a large selection of **Toolpath** editing options that can be applied retrospectively.

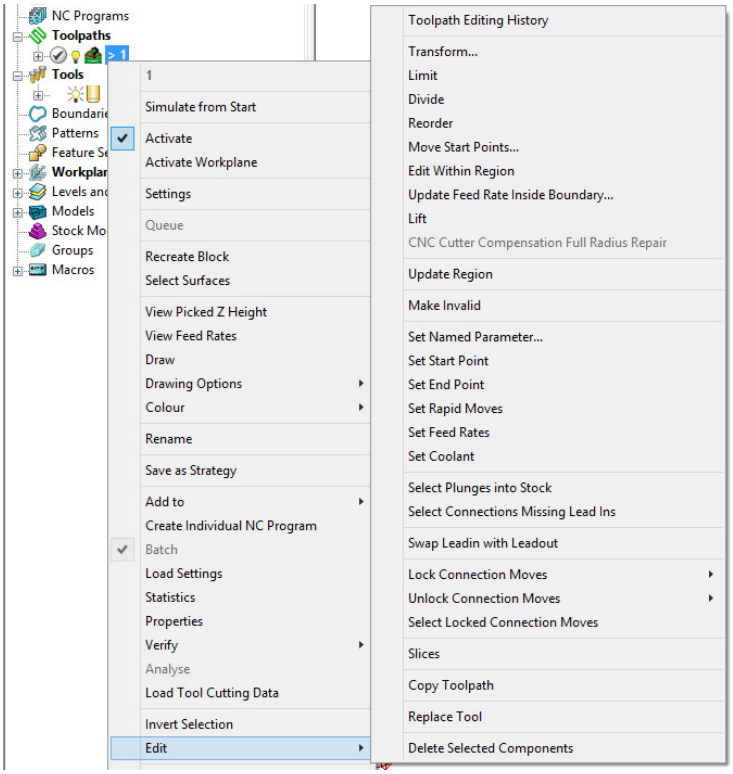

Many of the **Toolpath** editing options are accessed from the local menus (as shown above). Most of these edits will no longer apply if a **Toolpath** is subsequently re-calculated.

Edit > Transform

The **Transform** option allows you to **Move**, **Rotate**, and **Mirror** toolpaths relative to the **Transform** (Global datum) or an active **workplane**.

To access the options right-click on a **toolpath** and select **Edit** > **Transform**.

- **Transform > Move** - The **Move** function allows a selected **toolpath** to be moved by a user-defined ***Distance*** along a selected axis.

- **Transform > Rotate** - The **Rotate** function allows the rotation of a selected toolpath by a user-defined ***Angle*** around a selected **X**, **Y**, or **Z** axis.

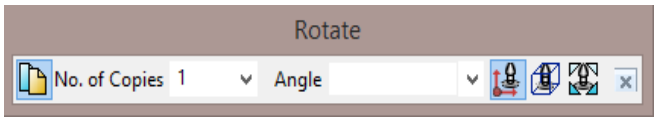

- **Transform > Mirror** - This provides 3 options to ***Mirror*** a selected toolpath across the **XY**, **XZ**, or **YZ** planes. When a toolpath is mirrored, **PowerMILL** identifies the gouge status to be unknown, so it is advisable to check for gouges.

It is important to note that when a toolpath is mirrored, the cutting direction effectively becomes reversed.

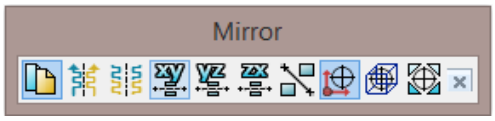

In the following example a single toolpath is created and then the **Transform > Move** option applied to copy toolpaths into the remaining cavities.

1 Select **File - Delete All** and **Tools - Reset Forms**.

2 Select **File > Open Project**:-

.....\PowerMILL_Data\Projects\EditToolpaths_1

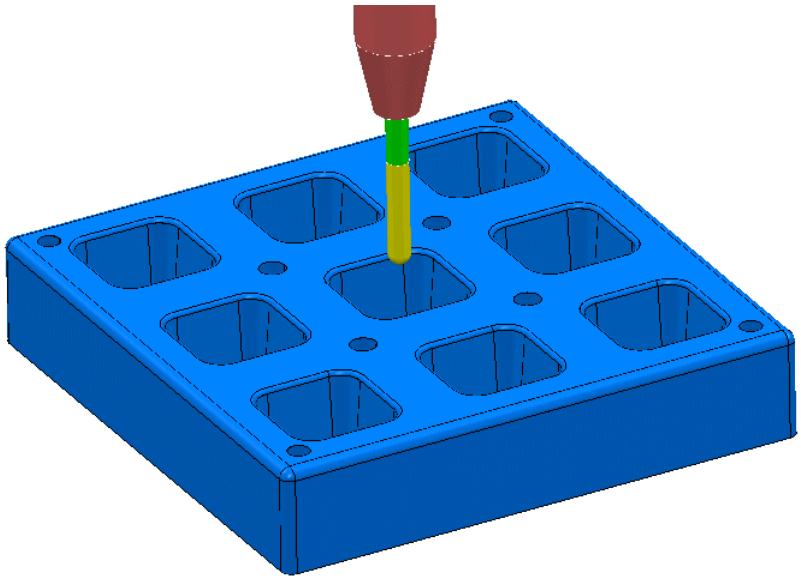

The **Project** contains a multi-cavity die and a **Dia 10 Ball Nosed** tool.

A **toolpath** will be created in the lower left cavity that is limited to be inside a **Selected Surface** Boundary.

3 **Save Project As**:

.....\COURSEWORK\PowerMILL-Projects\Transform

4 Create a **Block** using **Defined by > Box** and **Type > Model**.

5 **Calculate** the **Rapid Move Heights** using the default settings.

 Copyright © Delcam Ltd

6 Select all of the **surfaces** (including the fillet) that define the bottom left pocket.

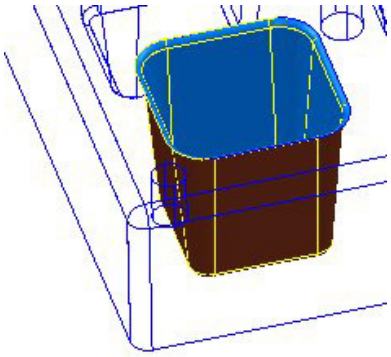

7 In the **PowerMILL *explorer***, right-click **Boundaries** and select **Create Boundary > Selected Surfaces**.

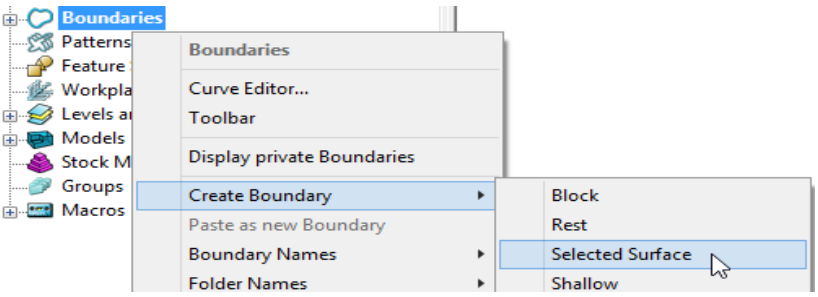

8 In the **Selected Surface Boundary** dialog, tick **Roll Over** and enter a **Tolerance 0.02** and ***un-tick***, **Allow boundary to be private**.

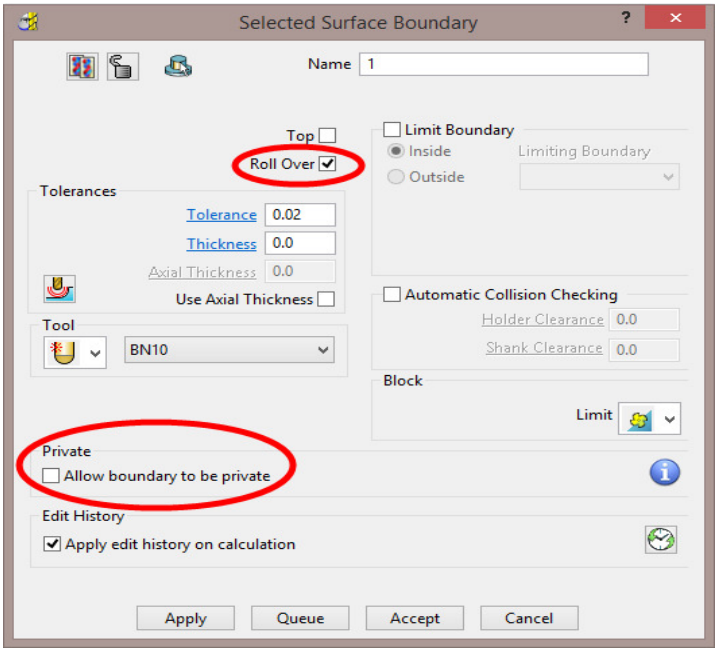

9 Click **Apply** and **Accept** the dialog.

A **Selected Surfaces Boundary** defines the limit where the ***active* Tool** and associated parameters would fully machine the selected surfaces.

10 Open the **Optimised Constant Z Finishing** strategy and enter the values and settings exactly as shown in the 2 dialog pages below:

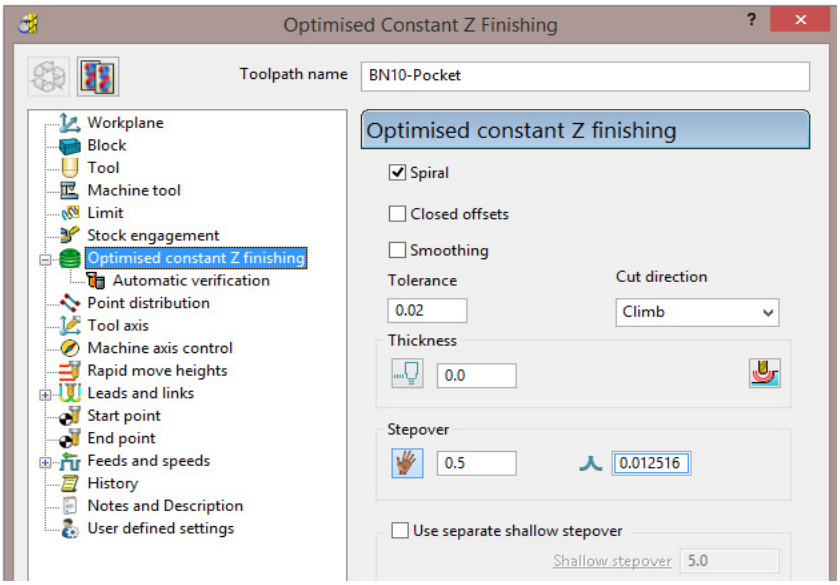

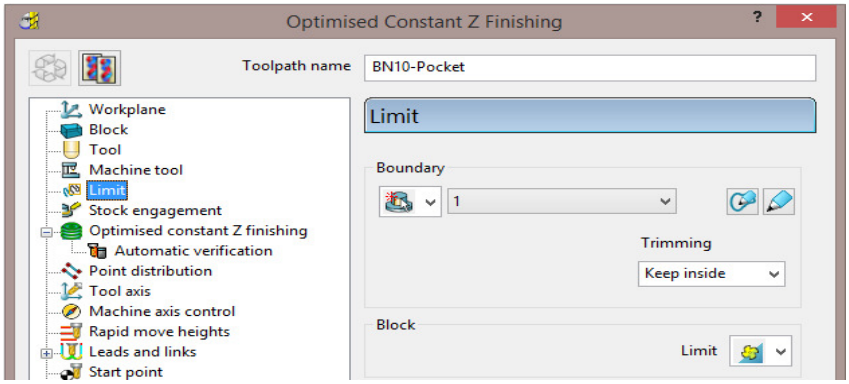

11 Click **Calculate** to process the toolpath and then **Close** the dialog.

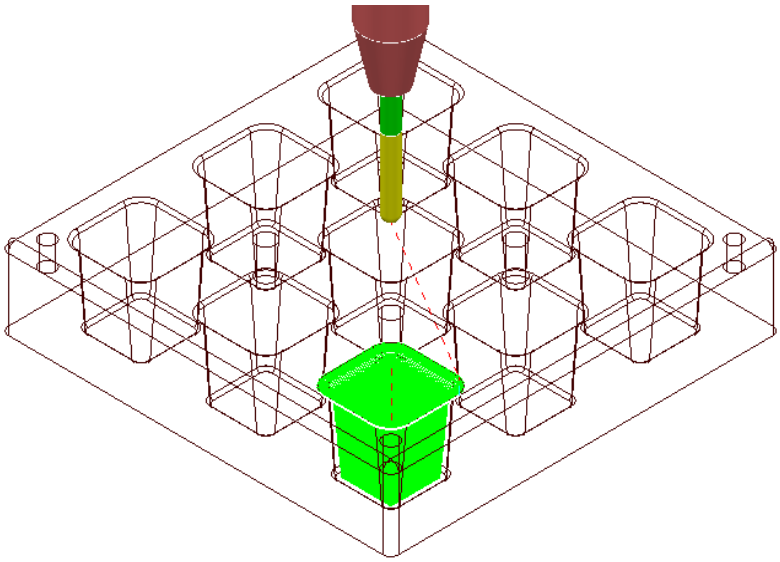

12 In the **PowerMILL** ***explorer***, right-click the **toolpath BN10-Pocket** and select **Simulate from Start**, and click **Play** in the **Simulation** toolbar.

 Copyright © Delcam Ltd

Transforming toolpaths

Before transforming toolpaths, it is advisable to create a master copy of the original.

1 Right-click the **BN10-Pocket** toolpath and select **Edit > Copy Toolpath** and then **Rename** the copy **BN10-Pocket_1** as **BN10-Master**.

2 In the **PowerMILL *explorer*** select the toolpath **BN10-Master** and with the left mouse key depressed, drag it onto **Toolpaths** to move it to the top of the list.

3 In the **PowerMILL *explorer***, right-click on the **toolpath BN10-Pocket** and select **Edit > Transform** to display the **Toolpath Transform** toolbar.

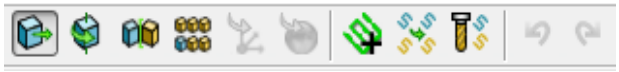

4 Switch off the 'append toolpaths' option .

5 On the **Toolpath Transform** toolbar, click **Move** .

6 On the **Move** toolbar, click **Keep original** with **No. of Copies** as **2**.

7 In the data entry box located below the graphics area, enter the ***relative distance*** along X as **80**, and press ***Enter*** on your keyboard.

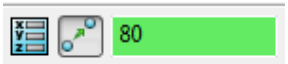

X Y Z values (separated by a space) are entered into this box as required.

8 In the **Transform** toolbar, click to close and accept the changes.

Two new copies of the original **toolpath** named **BN10-Pocket_1** and **BN10-Pocket_2** are created and transformed along **X** by a relative distance of **80**.

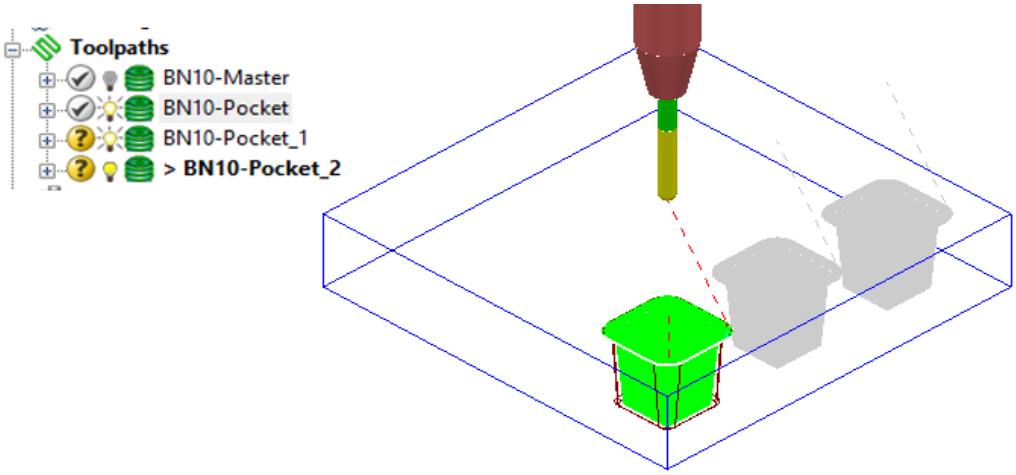

Note: It is possible to directly append all of tool tracks into a new, single toolpath **BN10-Pocket_1**.

This is achieved by selecting the **Automatically append transformed toolpaths** option before applying the transform values.

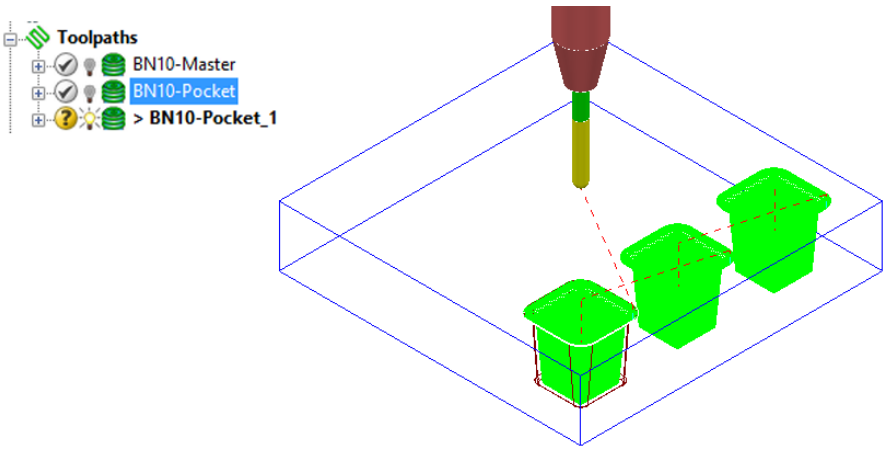

Gouge checking a toolpath

A next to the toolpath indicates that it has not been gouge checked directly to the model.

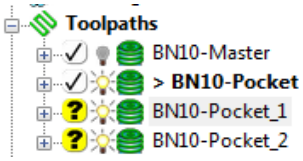

1 **Activate** the **toolpath *BN10-Pocket_1***.

2 Right-click on the **toolpath *BN10-Pocket_1*** and from the local menu select **Verify > Toolpath**.

3 In **Check** select the **Gouges** option.

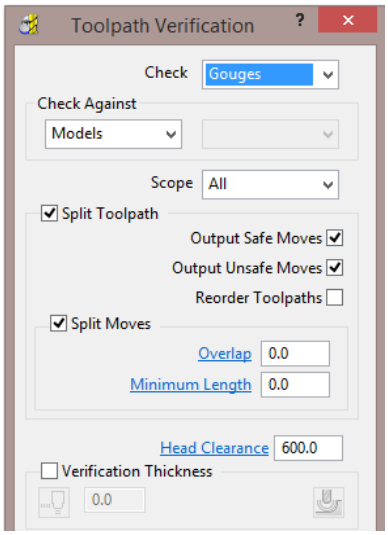

4 **Apply** the **Toolpath Verification** dialog.

 Copyright © Delcam Ltd

A **PowerMILL information** box is displayed to inform of the gouge checking status. In this instance, ***No gouges were found***.

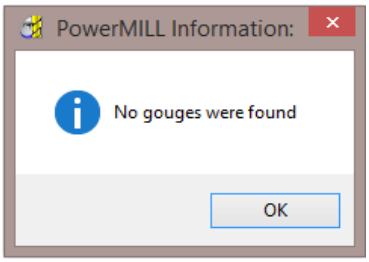

In the **PowerMILL *explorer***, the style of the icon also updates indicating that the **toolpath** is gouge free.

5 Repeat the **Verify > Toolpath** process on **BN10-Pocket_2**

Multiple Transform

6 **Delete** both of the toolpaths **BN10-Pocket_1** and **BN10-Pocket_2**.

7 Right mouse click on toolpath **BN10-Pocket** and from the local menu select **Edit > Transform**.

8 Select the option **Automatically append transformed toolpaths**.

9 Select the option **Multiple Transform** to open the following dialog.

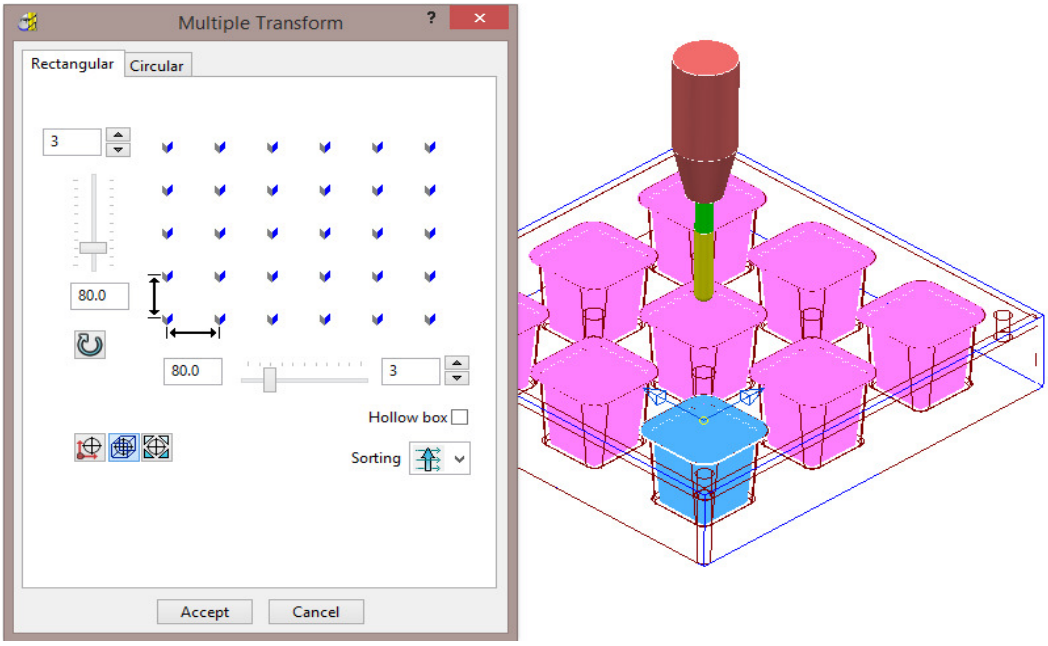

10 Enter **3** for number of copies and a pitch of **80** for both in ***X*** and ***Y*** before selecting **Accept**.

11 In the **Transform** toolbar, click ✓ to close and accept the changes.

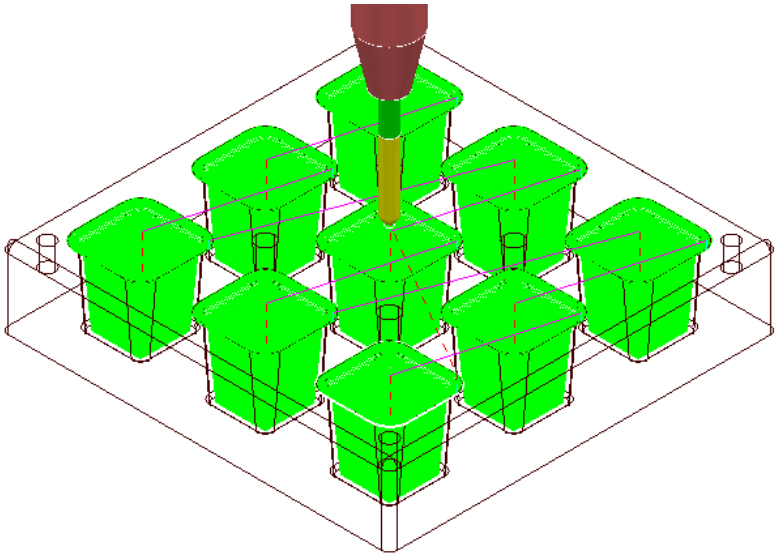

*A new **toolpath** (**BN10-Pocket_1**) is created that machines all 9 pockets.*

12 **Activate** and **Verify** the new toolpath **BN10-Pocket_1** to check for **gouges**.

13 Select **File - Save Project** to update:

.....\COURSEWORK\PowerMILL-Projects\Transform

Edit > Limit...

Edit > Limit provides a series of options to retrospectively, trim a toolpath to a **Plane**, **Polygon**, or **Boundary**.

*These types of retrospective limiting will be undone if the **Strategy** is re-calculated.*

For more permanent toolpath limiting use a **Boundary** as part of the original **Strategy** calculation.

A typical application for retrospective **Toolpath** limiting would be the (one off) re-machining of a local area that has been welded.

 Copyright © Delcam Ltd

Edit > Limit > To a Plane

Edit > Limit to - ***Plane*** allows the user to select a plane at specified distance along the **X**, **Y**, or **Z** axis.

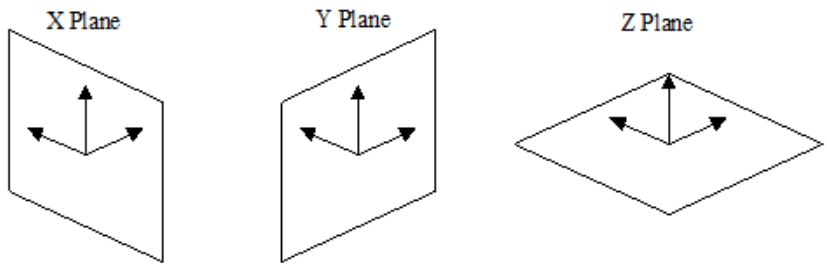

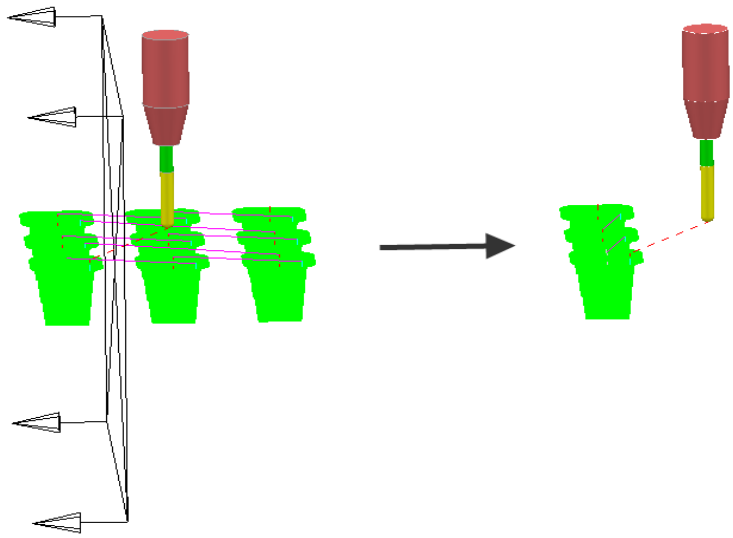

The **Edit > Limit to** - **Arbitrary** option allows the user to specify an X,Y,Z ***Point*** and a user defined, ***Normal*** vector for the limiting plane.

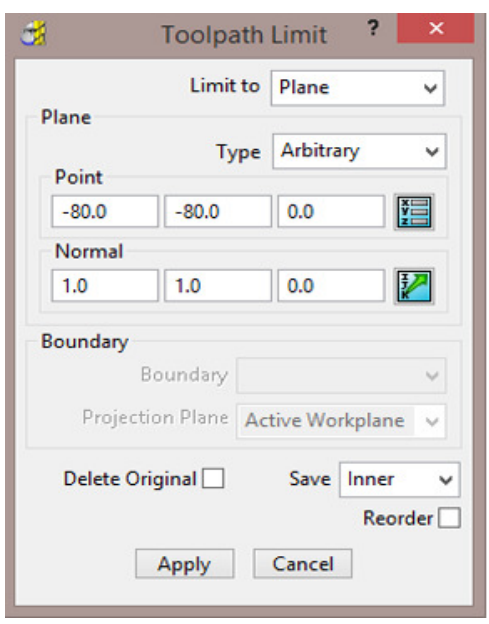

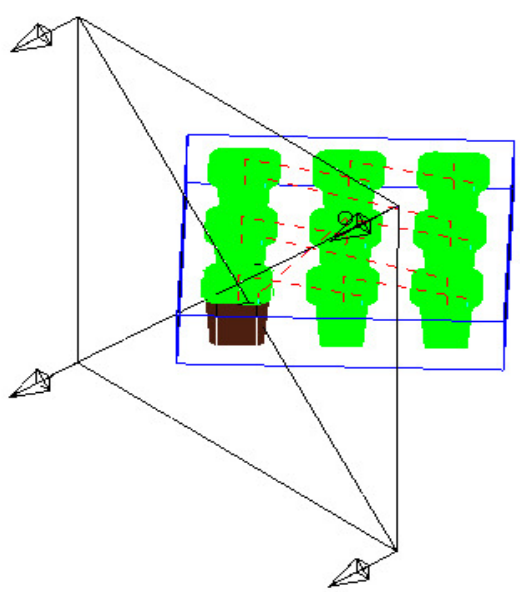

Edit > Limit > to a Polygon

Using the mouse, you can sketch polygons with any number of sides.

This allows complex areas to be defined, with the option to save the Inside, Outside, or Both sides of the polygon.

*Before making a polygon ensure that the snap filter is set to pick **Anywhere**.*

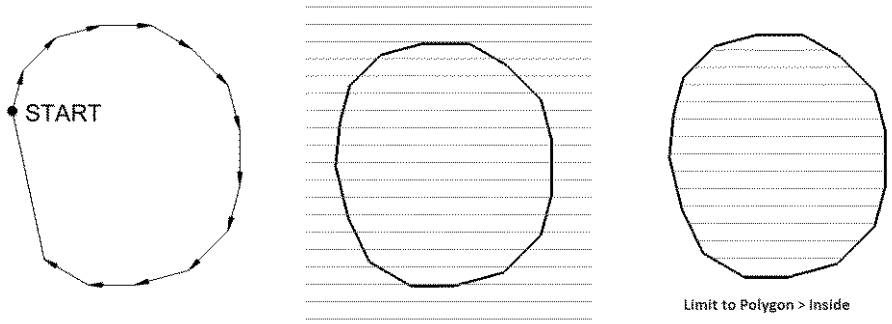

Edit > Limit > to a Boundary

This provides the option to retrospectively limit a **toolpath** to an existing **Boundary**. This is okay if a temporary, quick solution is acceptable, otherwise the **Boundary** should ultimately be included within the strategy calculation for a permanent solution. A typical application for this would be the 'one off' machining of an area that has been welded due to a previous gouging error.

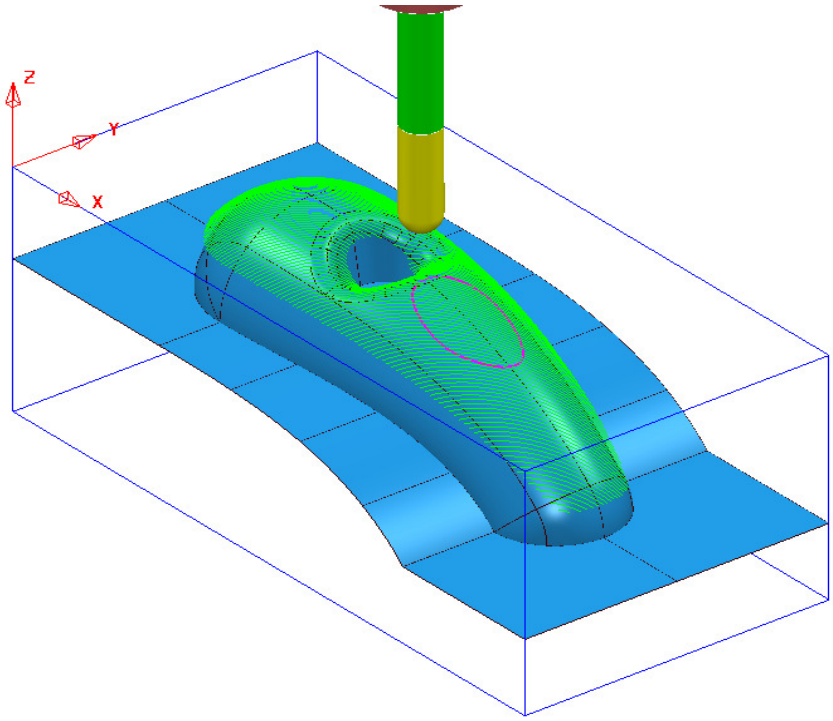

 Copyright © Delcam Ltd

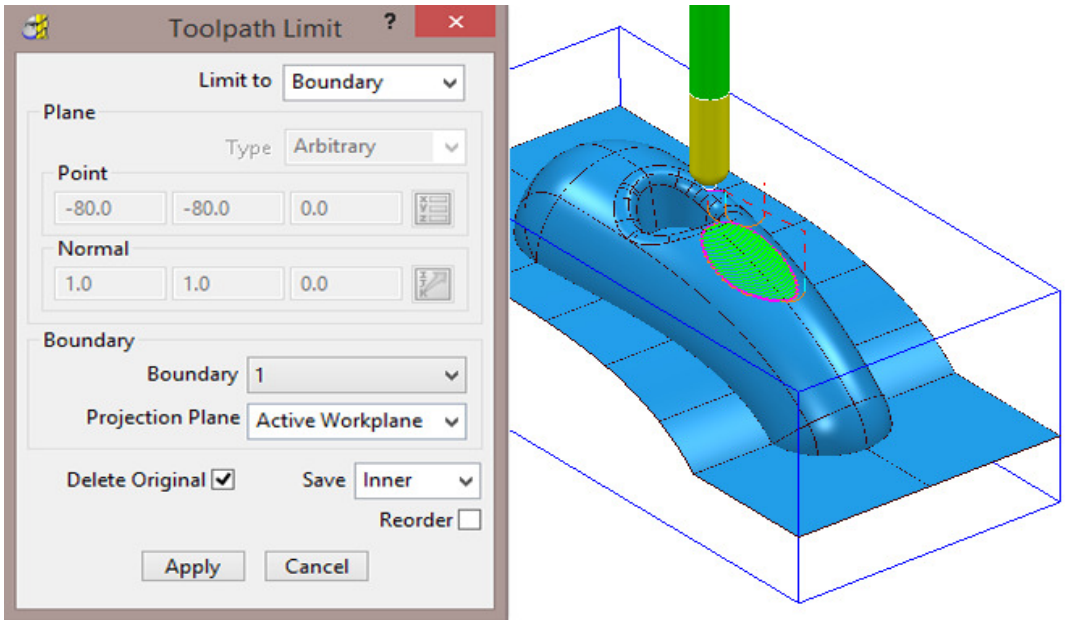

*If the **Delete Original** option is selected, it causes the deletion of the original toolpath once the new toolpath is created.*

If the toolpath is re-Calculated any retrospective limiting will not apply to the new or edited strategy.

Changing the Order and Direction within Toolpaths – EX1

For toolpaths containing internal link moves, the ***order*** and ***direction*** of the tool tracks can be changed. For example, if a machining sequence starts at the bottom of the part, and progresses upwards, reversing the order will change the tool track sequence to start at the top of the part and make it progress downwards.

1 Select **File - Delete All** and **Tools - Reset Forms**.

2 From **File > Open Project** select the read-only **Project**:

.....\PowerMILL_Data\Projects\EditToolpaths_2

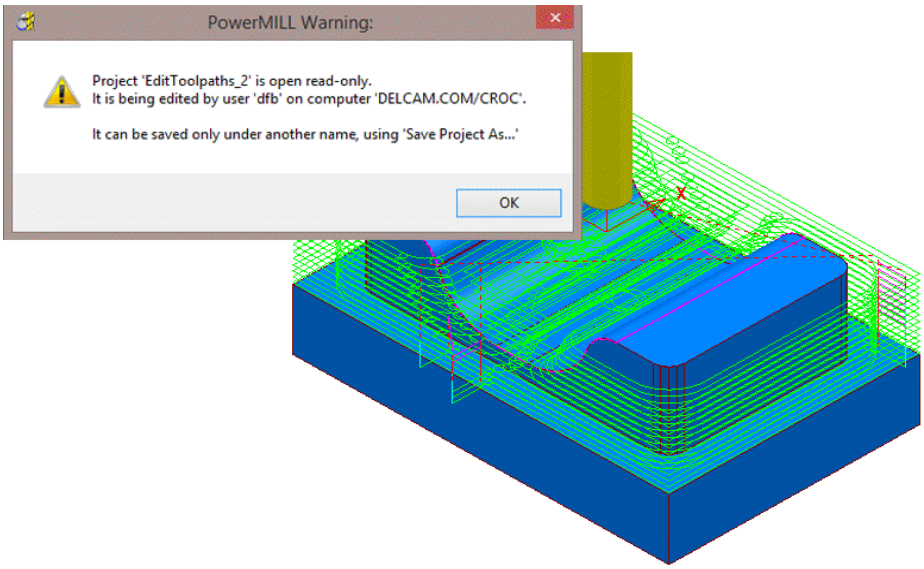

3 Select **File > Save Project As**:

.....\COURSEWORK\PowerMILL-Projects\EditToolpaths-EX1

4 In the **PowerMILL *explorer***, right mouse click on the **toolpath bn12-finish-a1** and then from the local menu select **Simulate from Start**.

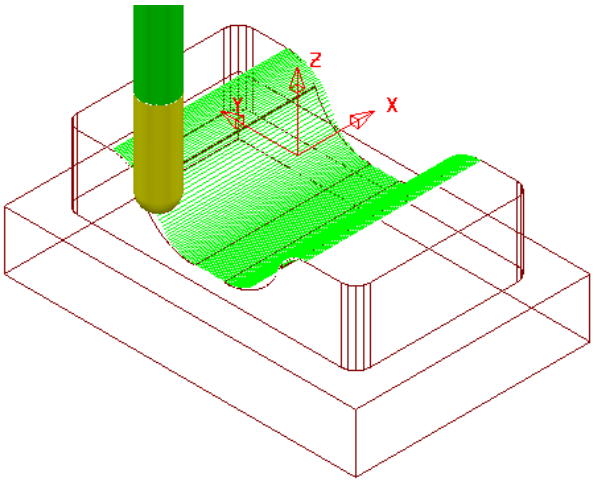

The tool ***Climb Mills*** across the form, stepping downwards to the base before stepping up the other side.

 Copyright © Delcam Ltd

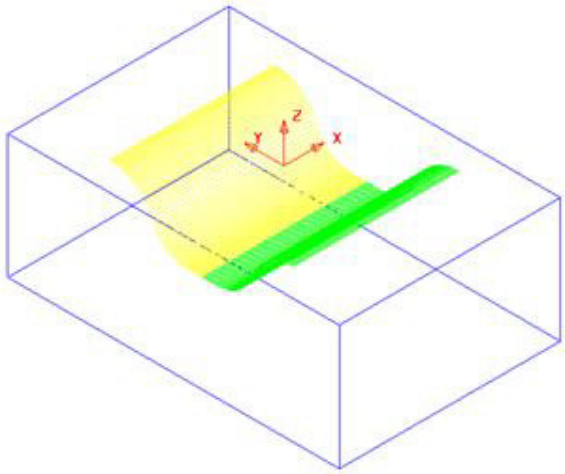

5 Left-click to select all tool tracks on **bn12-finish-a1** beyond the centre of the form (Yellow in the illustration above).

6 In the **PowerMILL *explorer***, right-click the active **toolpath**, ***bn12-finish-a1*** and from the local menu select **Edit > Reorder** to open the following dialog.

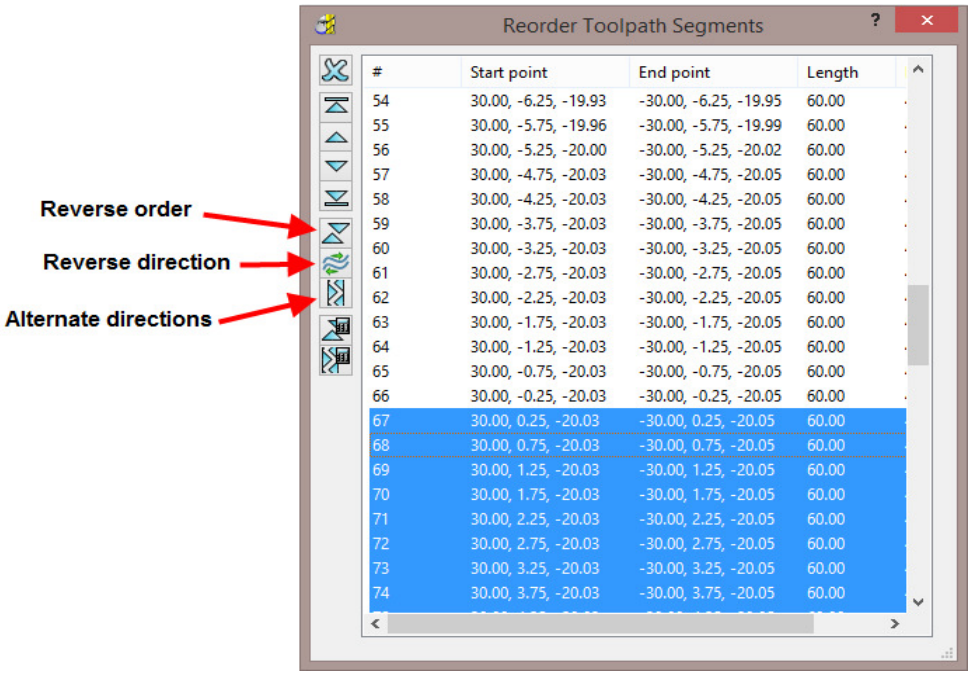

#	Start point	End point	Length
54	30.00, -6.25, -19.93	-30.00, -6.25, -19.95	60.00
55	30.00, -5.75, -19.96	-30.00, -5.75, -19.99	60.00
56	30.00, -5.25, -20.00	-30.00, -5.25, -20.02	60.00
57	30.00, -4.75, -20.03	-30.00, -4.75, -20.05	60.00
58	30.00, -4.25, -20.03	-30.00, -4.25, -20.05	60.00
59	30.00, -3.75, -20.03	-30.00, -3.75, -20.05	60.00
60	30.00, -3.25, -20.03	-30.00, -3.25, -20.05	60.00
61	30.00, -2.75, -20.03	-30.00, -2.75, -20.05	60.00
62	30.00, -2.25, -20.03	-30.00, -2.25, -20.05	60.00
63	30.00, -1.75, -20.03	-30.00, -1.75, -20.05	60.00
64	30.00, -1.25, -20.03	-30.00, -1.25, -20.05	60.00
65	30.00, -0.75, -20.03	-30.00, -0.75, -20.05	60.00
66	30.00, -0.25, -20.03	-30.00, -0.25, -20.05	60.00
67	30.00, 0.25, -20.03	-30.00, 0.25, -20.05	60.00
68	30.00, 0.75, -20.03	-30.00, 0.75, -20.05	60.00
69	30.00, 1.25, -20.03	-30.00, 1.25, -20.05	60.00
70	30.00, 1.75, -20.03	-30.00, 1.75, -20.05	60.00
71	30.00, 2.25, -20.03	-30.00, 2.25, -20.05	60.00
72	30.00, 2.75, -20.03	-30.00, 2.75, -20.05	60.00
73	30.00, 3.25, -20.03	-30.00, 3.25, -20.05	60.00
74	30.00, 3.75, -20.03	-30.00, 3.75, -20.05	60.00

The selected segments are shown highlighted (blue) in the dialog.

Each segment is listed in the order of execution. If a toolpath segment is selected on the list, the corresponding segment is highlighted in the graphics area (and vice versa). You can modify or move the selected toolpath to another position in the pecking order.

You can use the buttons on the left hand side of the dialog for changing the order and direction of selected segments. If no segments are selected, the whole of the toolpath will be edited.

The 2 buttons to the lower left of the dialog are **Automatic Reorder** and **Automatic Reorder and Reverse** . These can only be applied to the whole toolpath and not on selected tool tracks. They are designed purely to minimise unnecessary air moves.

7 Click on the **Reverse Order** button to reverse the sequence of the selected tool tracks.

8 Click on the **Reverse Direction** button to reverse the direction of each selected tool track.

9 Open the **Leads and Links** dialog and **Apply**:-

Vertical arc:- Lead in with **Angle 90** and **Radius 6** and

Lead out with **Extended move** with **Distance 10**

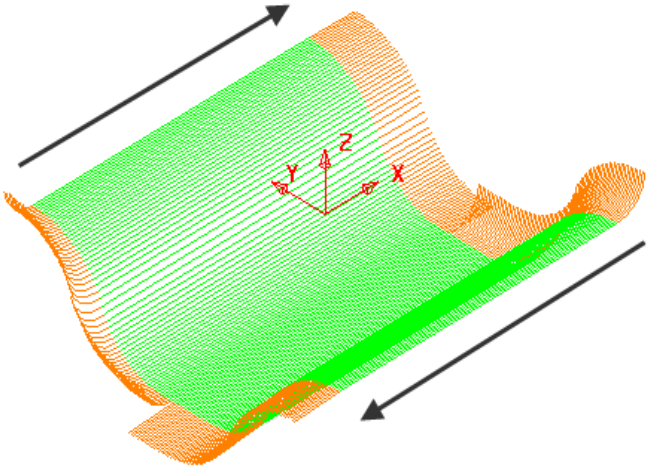

The **Order** and **Direction** of the toolpath has been edited so that it tracks from the outer edges of the form downwards towards the centre of the base.

Lead In - ***Vertical Arc*** *and* **Lead Out** - ***Extended Move*** *has been applied to the above toolpath to identify the directional differences.*

10 **Save Project As**:

.....\COURSEWORK\PowerMILL-Projects\EditToolpath-EX1

 Copyright © Delcam Ltd

Changing the Order and Direction within Toolpaths – EX2

1 From the **main** menu, select **File - Delete All** and **Tools - Reset Forms**.

2 **Open** the read-only **Project**:-

.....\PowerMILL_Data\Projects\EditToolpaths_3

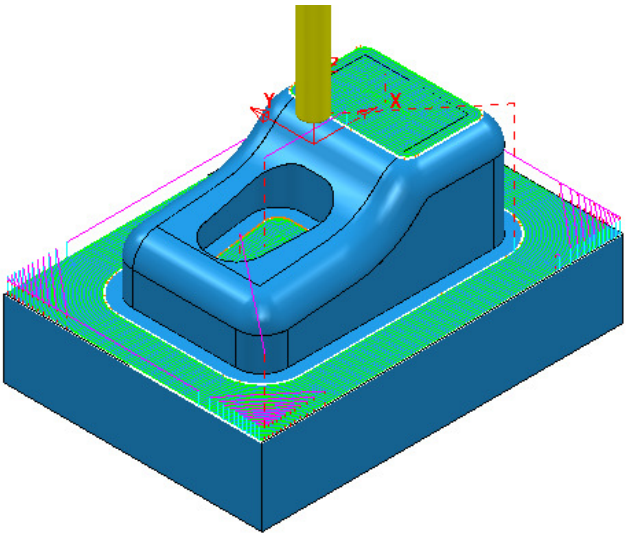

3 **Save Project As**:

.....\COURSEWORK\PowerMILL-Projects\EditToolpaths-EX2

The **Project** includes a **3D Offset** finishing toolpath **D10TR1-FIN1** controlled by both **Boundary** and **Pattern** segments.

4 **Simulate** the **Toolpath** using a slow setting.

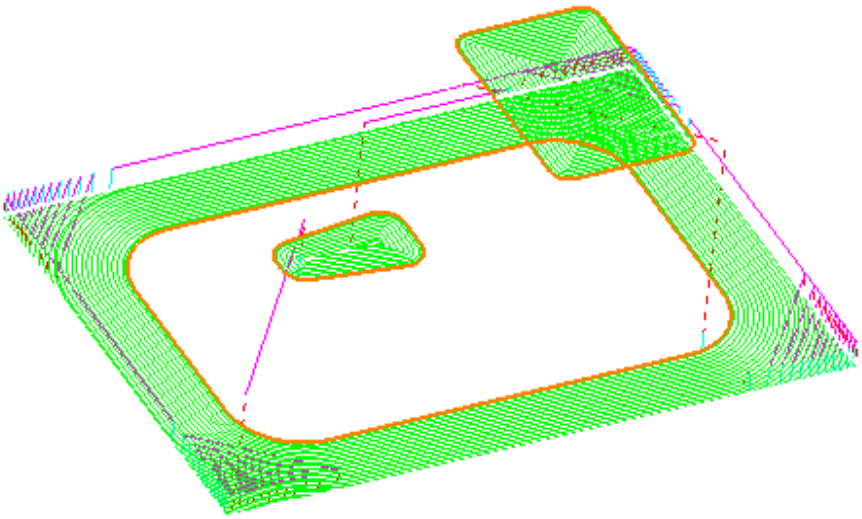

Observe the current direction and ordering of the strategy considering potential improvements.

For example, the lower area machining would benefit from climb milling inwards towards the component form and the pocket machining could start central and climb mill outwards towards the sidewall.

5 From the **Main** menu, select **View > Toolbar > Toolpath** to display the **Toolpath** Toolbar.

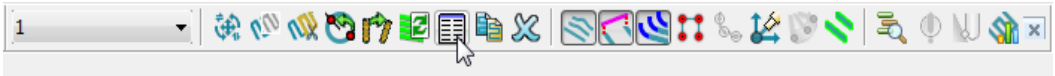

6 Select all tool tracks in the lower area and select **Reverse Order** . This part of the strategy should now climb mill inwards, towards the main component dialog. If not 'climb milling', then apply **Reverse Direction** .

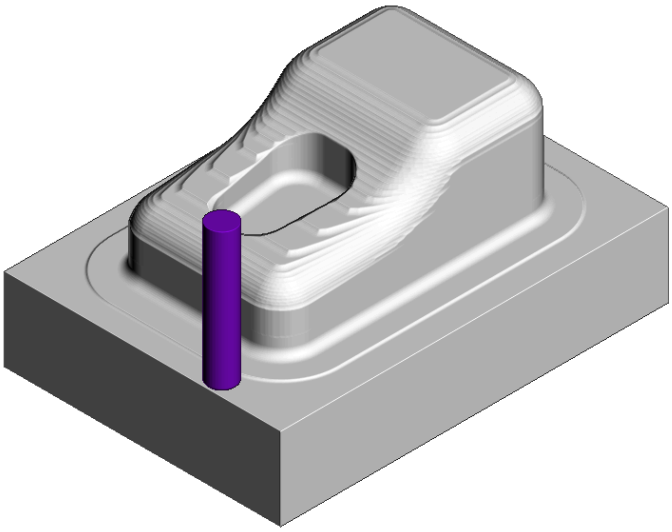

7 Select the tool tracks in the central pocket and again select **Reverse Order** followed by **Reverse Direction**. This part of the strategy should now climb mill from the centre of the pocket outwards.

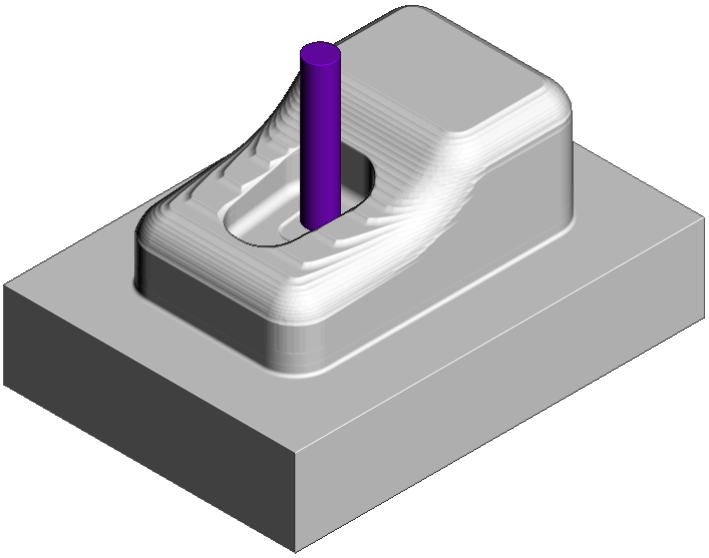

*Extra care is required when using the Spiral option in the selected finishing strategy as these are continuous tool tracks and can only be reversed and not internally reordered (If a spiral track is created to **Climb Mill** outwards then it can only be modified to **Climb Mill** inwards).*

 Copyright © Delcam Ltd

Moving Start Points

Start points on the tool tracks can be moved to provide a more suitable position for applying leads. This is achieved by defining a line that crosses the new start positions on the toolpath.

1 Select **File - Delete All** and **Tools - Reset forms**.

2 Select **File - Open Project**:

.....\PowerMILL_Data\Projects\limiting-example

3 Save Project As:

.....\COURSEWORK\PowerMILL-Projects\MoveStartPoint-EX1

4 Select an **ISO1** view.

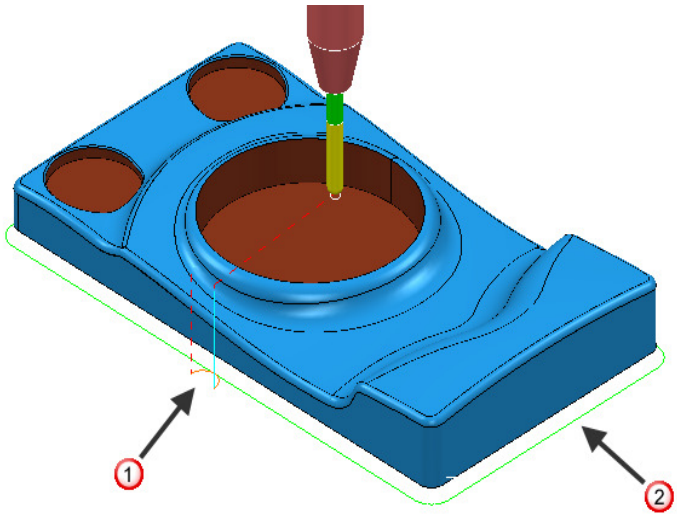

The toolpath start point 1 needs to be moved to position 2.

5 Select a **View from top (Z)**.

6 Right-click **toolpath 1** and select **Edit > Move Start Points** and from the ***toolbar*** select **Move start point by clicking a toolpath segment** .

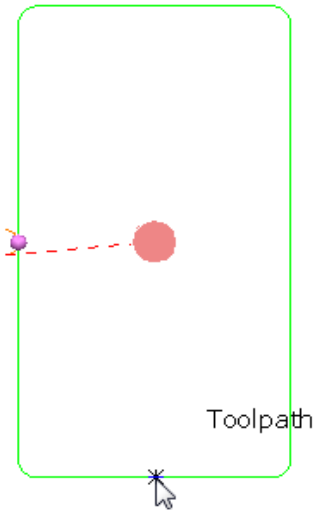

7 Click a point along the toolpath segment and then ✓ to accept the change.

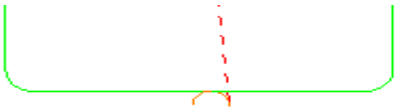

This has moved the toolpath start point.

8 Save the **Project** to update:-

.....\COURSEWORK\PowerMILL-Projects\MoveStartPoint-EX1

Moving multiple points

It is possible to apply the **Move start points** option on the toolpath to multiple positions.

1 Select **File - Delete All** and **Tools - Reset Forms**.

2 Open the **Project**:

.....\PowerMILL_Data\Projects\PunchForm10-Start

3 **Save Project As**:

.....\COURSEWORK\PowerMILL_Projects\PunchForm10

4 Select a **View from top (Z)**.

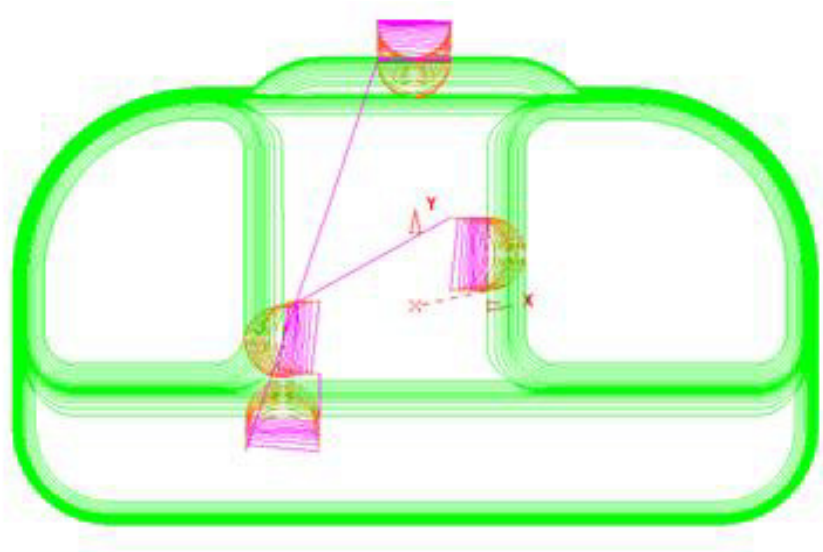

5 Right-click the ***active* toolpath** and from the local menu select **Edit > Move Start Points** (The ***Move Start Points*** toolbar is displayed).

6 If not already selected, on the ***toolbar***, click the **Move Start Points by drawing a line** button.

 Copyright © Delcam Ltd

7 On each of the three locations shown below, in the listed order, click and select 2 points on both sides of the tool tracks.

- ① - First move point selection points.

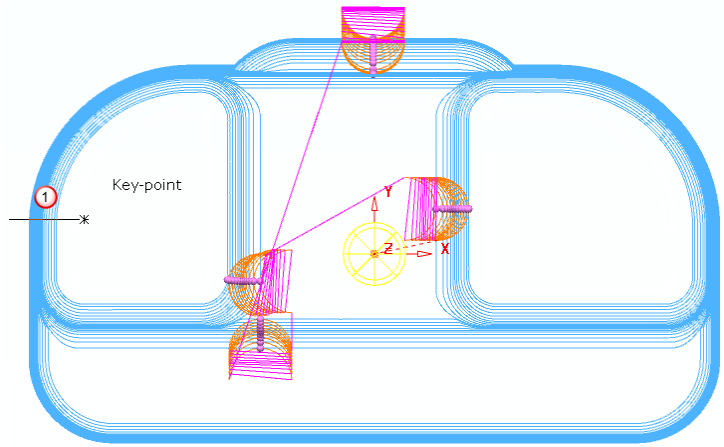

- ② - Second move point selection points.

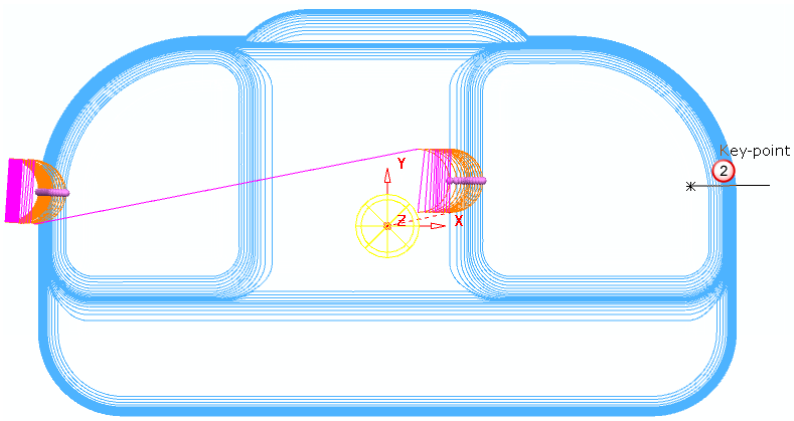

- ③ - Third move point selection points.

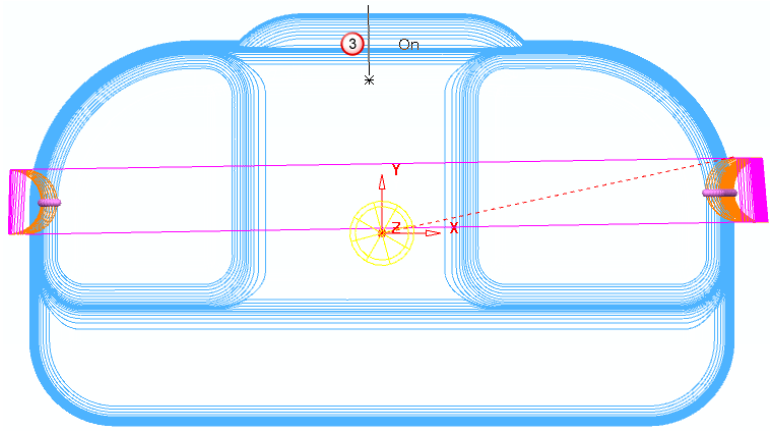

The final output looks similar to this:

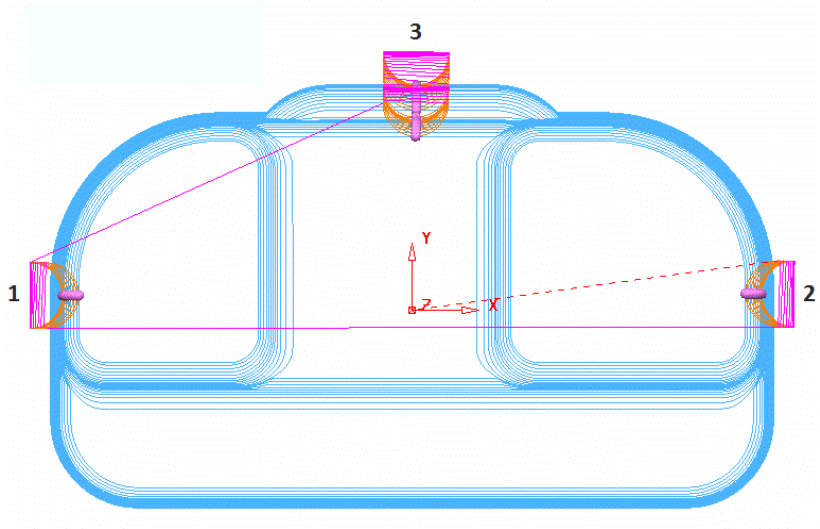

*The tool tracks are coloured blue while the **Move Start Points** toolbar is active.*

8 Click ✓ on the **Move Start Point** toolbar to accept the changes.

9 Save the **Project** to update:-

.....\COURSEWORK\PowerMILL-Projects\ PunchForm10

Feeds and Speeds

You can modify Feed Rates using the **Feeds and Speeds** dialog to retrospectively **Apply** them to the ***Active* toolpath**.

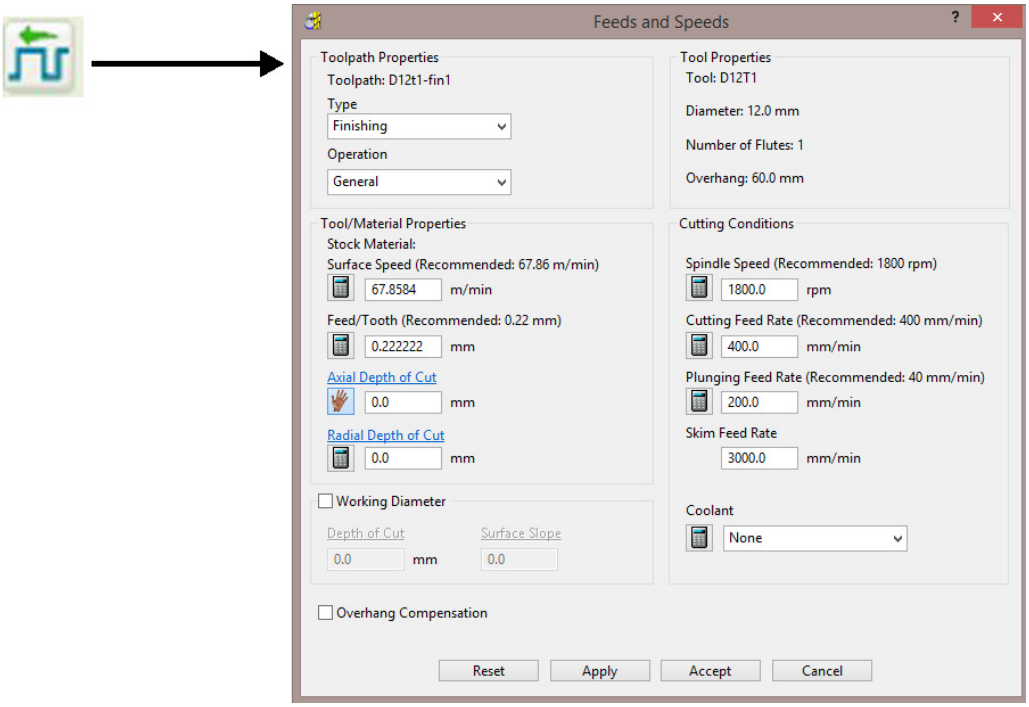

 Copyright © Delcam Ltd

1 Select **File - Delete All** and **Tools - Reset Forms**.

2 Select **File > Open Project**:

.....\PowerMILL_Data\Projects\ExtraFeedrates-Start

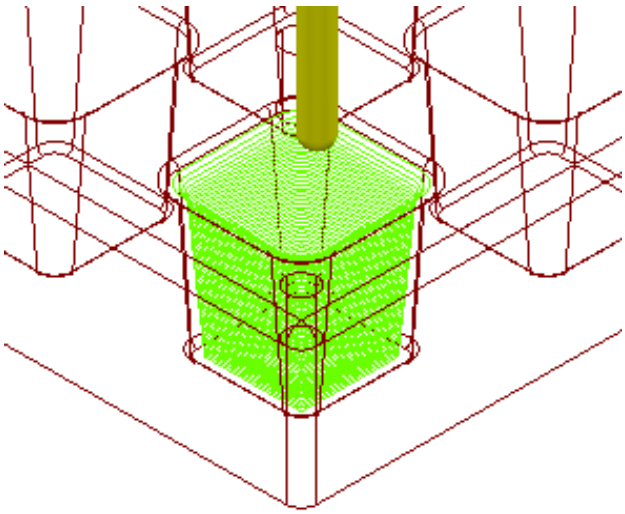

3 Select **File > Save Project As**:

.....\COURSEWORK\PowerMILL-Projects\ExtraFeedrates-Example

4 Undraw the **Model**, **Block**, **Workplane**, and **Tool** to display the **Toolpath** and 3 **Boundaries**.

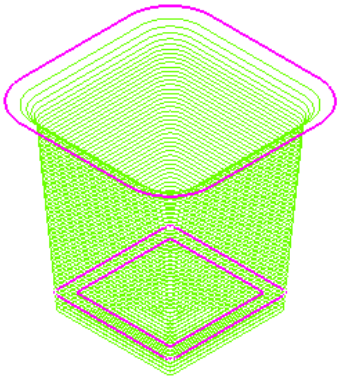

5 **Activate** both the **Toolpath** and **Boundary 2** (The middle one of the 3).

6 Right-click the **Toolpath** and select **Edit > Update Feed Rate Inside Boundary**.

7 Enter value as **50** and click ✓ to apply the percentage difference to the **Feed Rate** within the **Active Boundary**.

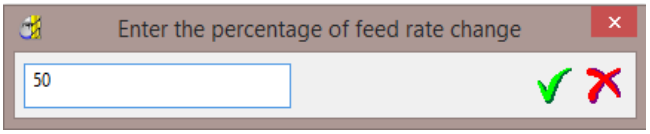

The **Toolpath** is split into two different coloured areas that are allocated a separate **Feed Rate** as a percentage of the original. The colour coded **Feedrates** are displayed in an **Information** dialog that appears automatically.

8 The ***Feedrates* Information** dialog can also be opened by:-

a Selecting **View Feedrates** from the local toolpath (**BN10-A1**) menu.

b By double-clicking on a ***Light bulb*** adjacent to a toolpath (**BN10-A1**) in the **PowerMILL explorer**.

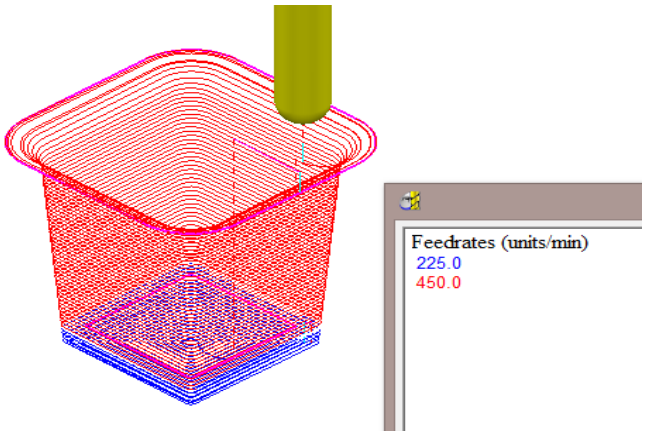

*The original Cutting Feedrate assigned to the toolpath was **450 mm/min**.*

9 **Activate** both the **Toolpath** and **Boundary 3**.

10 Right-click the **Toolpath** and from the local menu select **Edit > Update Feed Rate Inside Boundary**.

11 Enter the value **100** and click to apply the percentage difference to the **Feed Rate** within the **Active Boundary**.

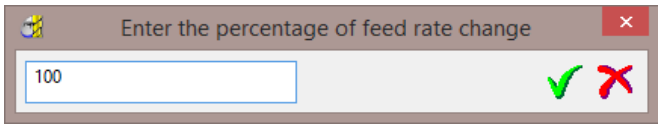

The central part of the **Toolpath** area, clear of the side wall, has changed back to the nominal **Feed Rate** value.

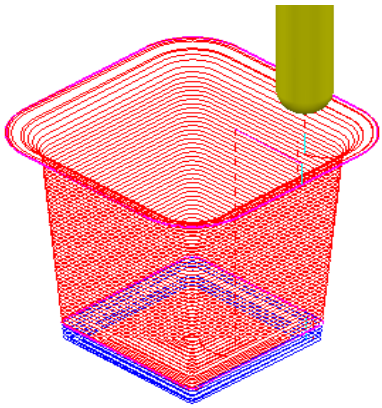

12 The ***Feedrates* Information** dialog can also be opened by double-clicking on a ***Light bulb*** adjacent to a **Toolpath** in the **PowerMILL explorer**.

In this case, the nominal **Feed Rate** is **450 mm/min**, and the modified section (near the intersection of the Base and Sidewall of the pocket) is reduced by 50% to **225 mm/min**. The colour of the values displayed in the Information dialog is the same as the colours displayed on the toolpath.

 Copyright © Delcam Ltd

Safe Z and Start Z Positions

The tool **Rapid Move Heights** can be modified in the dialog and applied retrospectively to the **Active toolpath**.

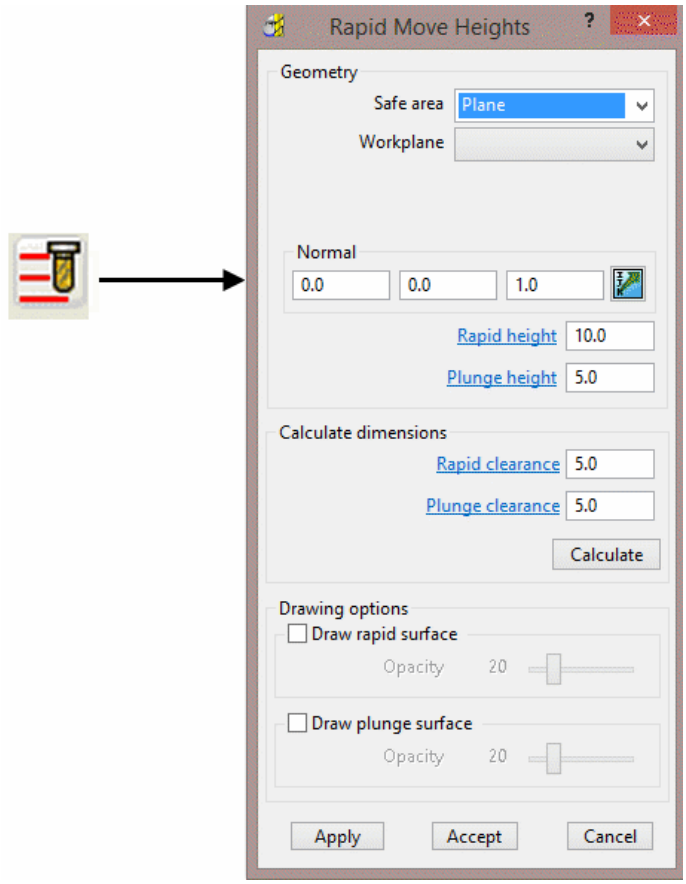

Editing Tool Start and End Point Positions

The tool **Start Point**/**End Point** can be modified in the dialog and applied retrospectively to the **Active toolpath**.

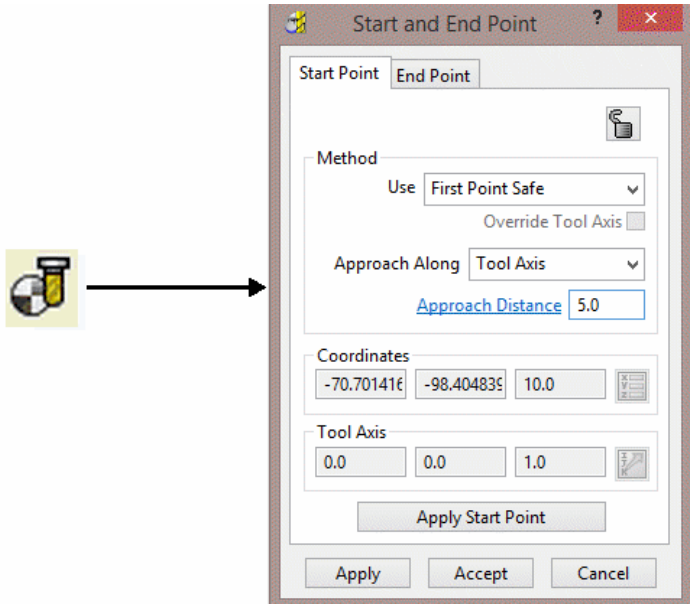

Copyright © Delcam Ltd

9. Tool Holder Collision Checking

Collision Checking

Collision Checking can either be applied retrospectively or directly during toolpath creation, as long as a tool **Shank** and **Holder** are defined with the ***Active* Tool**.

Retrospective Collision Checking (Verify -Toolpath)

If the **toolpath** menu option, **Verify > Toolpath -** (***Collisions***) is applied, two additional toolpaths will be created from the original, one being collision safe, and the other being in collision. At the same time a copy of the **Tool** complete with appropriate modifications will be substituted into the ***Original*** and ***Collision*** status toolpaths.

1 Select **File** > **Delete all** and **Tools** > **Reset** Forms.

2 **Import** the **Model**:-

...\PowerMILL_Data\Models\cowling.dgk

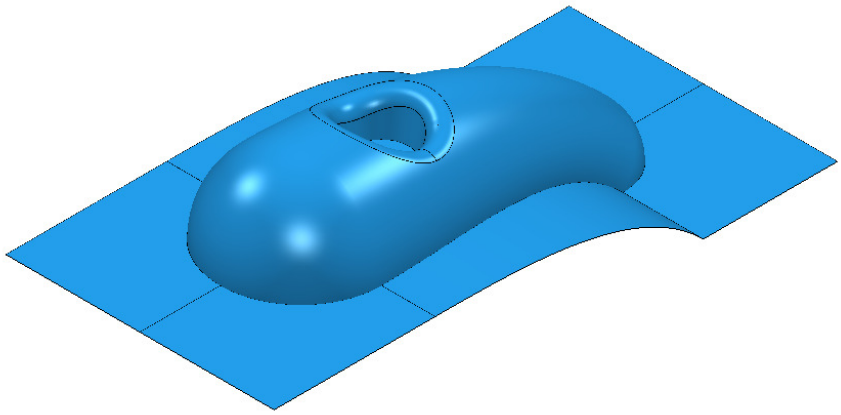

3 **Calculate** the **Block** to **Min/Max** limits.

4 **Calculate** both the **Rapid Move Heights** and the tool **Start** and **End Points**.

5 Create a Dia 5mm Ball Nose tool named **BN5-Short** with a length of **10** and tool number of **1**.

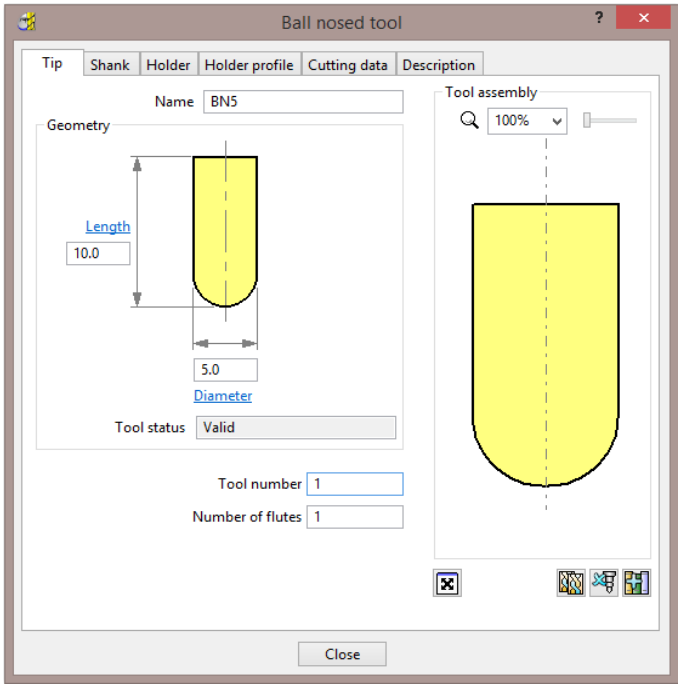

6 Select the **Shank** tab.

7 Select Add a **shank** component .

8 Fill in the dialog exactly as shown in the image below.

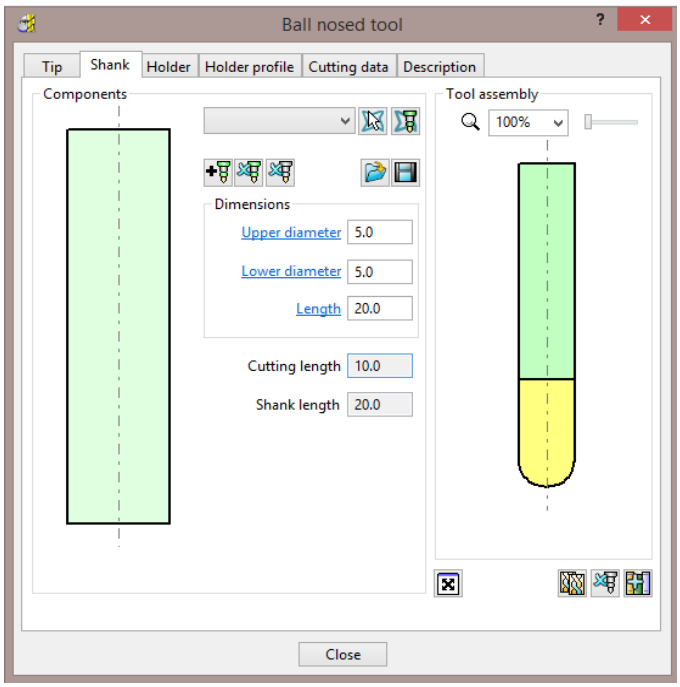

9 Select the **Holder** tab.

10 Select ***Add holder component*** .

11 Fill in the form for the first **Holder** element exactly as shown in the following image.

 Copyright © Delcam Ltd

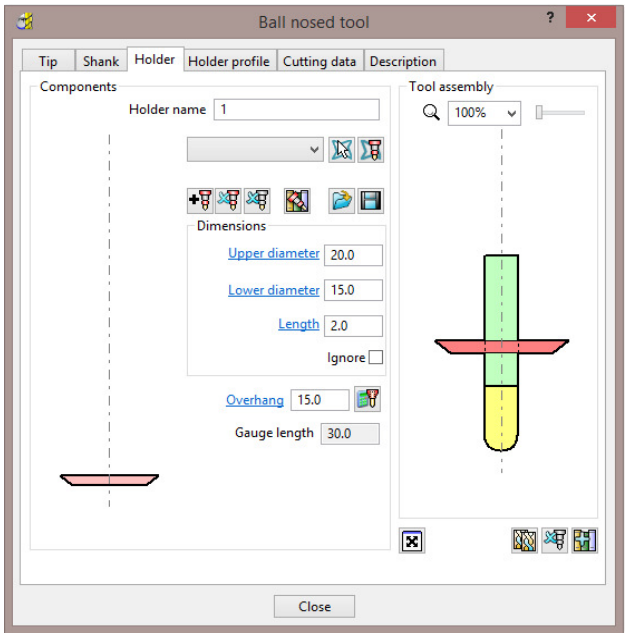

12 Select ***Add holder component***.

13 Enter an **Upper Diameter** of **22**, **Lower Diameter** of **20**, and **Length** of **10**.

14 Select ***Add holder component***.

15 Enter an **Upper Diameter** of **30**, **Lower Diameter** of **30**, **Length** of **10**, and an **Overhang** of **15**.

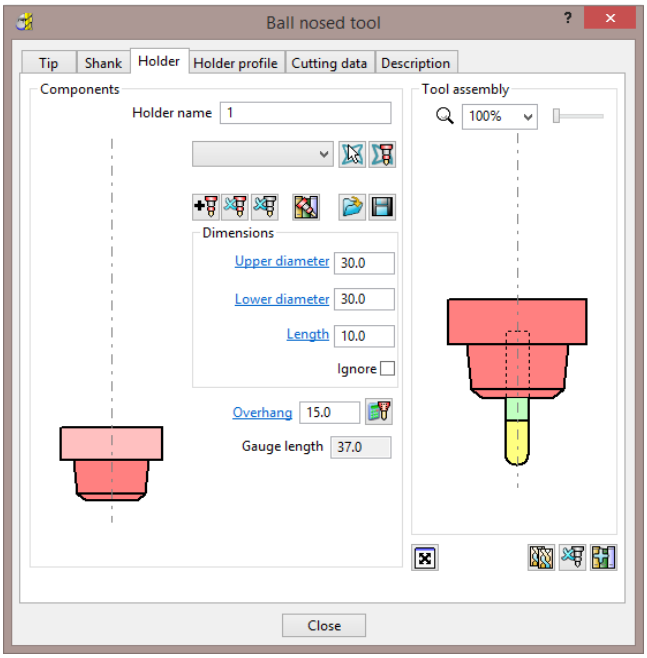

*If it is required to modify or delete a **Holder** element, select (left click) on one of them in the assembly illustration and it will turn pale. The current values for that element will be displayed and available for modification.*

*The same procedure applies to modify a **Shank** element.*

16 Click **Close**.

17 From the **main** toolbar, select **Toolpath Strategies** and from **Finishing** open a **Raster Finishing** strategy.

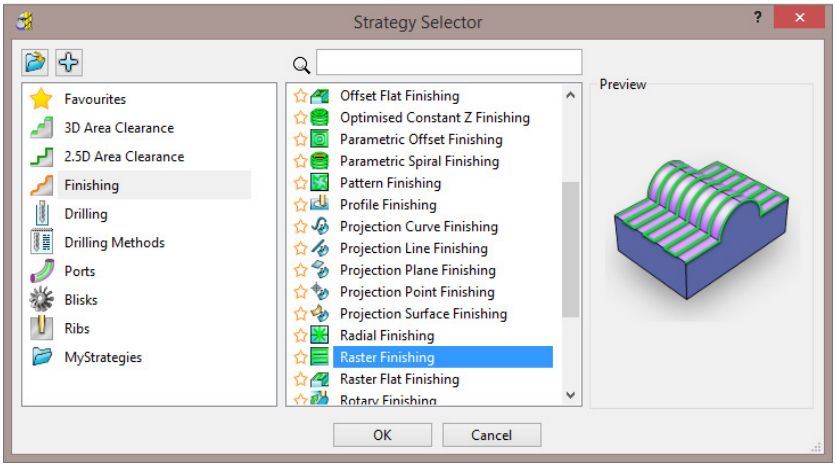

18 Enter ***Toolpath name*** as **BN5-RasterFinish**, **Angle 45**, and **Stepover 1**.

19 Select **Start Corner** - **Lower Left**.

20 Select **Style** - **Two way**.

21 In the **Leads and Links** , set both **Lead in** and **Lead out** with **1st choice** as **Surface normal arc** with **Angle 90** and **Radius 3**.

22 In the ***Leads and links*** - **Links** page, enter a **Short/Long Threshold** of **4**, set **Short** to **Circular Arc**, **Long** to **Skim**, and **Default** to **Incremental**.

23 In **Lead in** and **Lead out** pages, untick the option **Add leads to short links**.

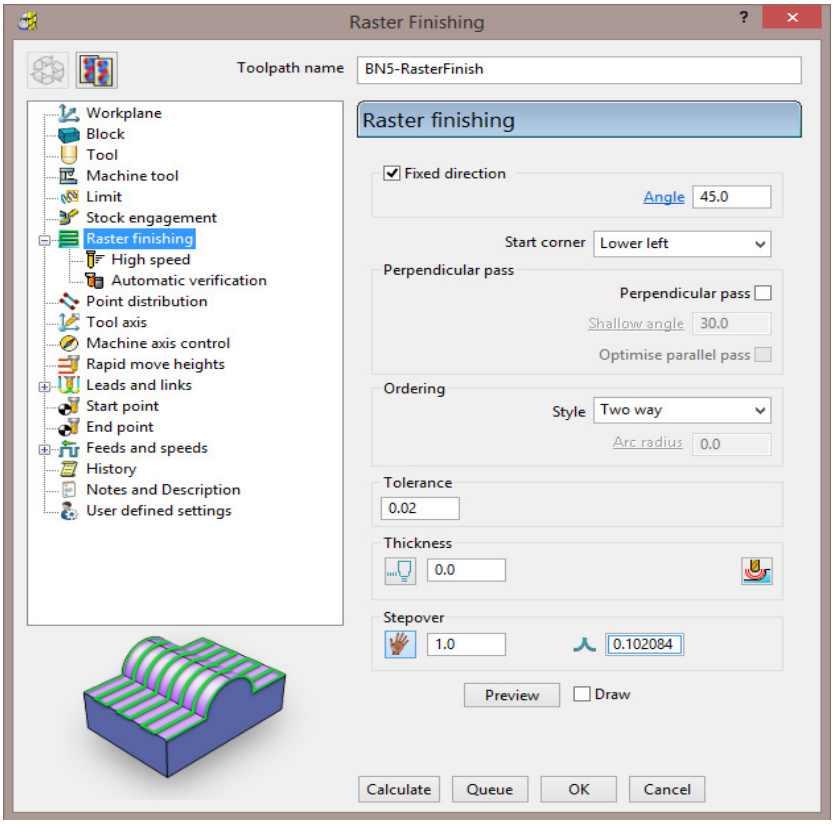

24 Click **Calculate** to process the **toolpath** and then **Close** the dialog.

Copyright © Delcam Ltd

25 In the **PowerMILL *explorer*** hold the cursor over the small box to the left of the toolpath lightbulb symbol.

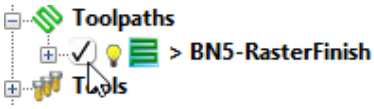

26 The **Safety Status** window will appear.

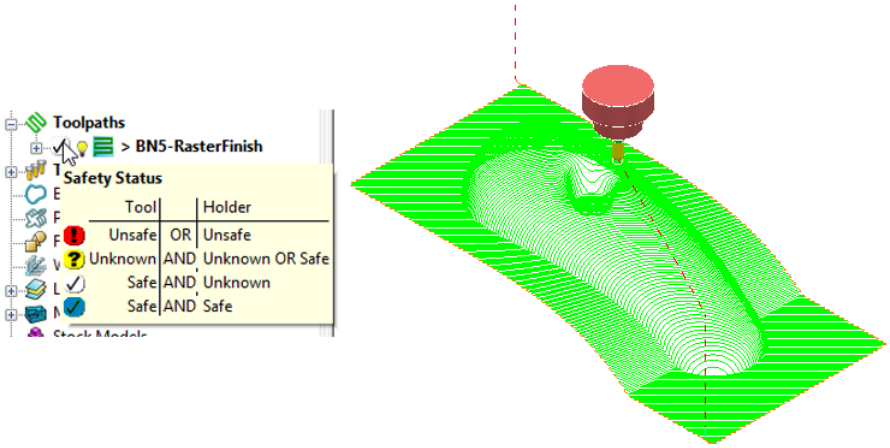

The new **toolpath** is ***gouge free*** as far as the **Tip** (cutting part) of the tool is concerned, but up to this stage no ***collision checking*** has been applied in relation to the **Shank** and **Holder**.

27 From the **Main** toolbar select **Toolpath Verification** .

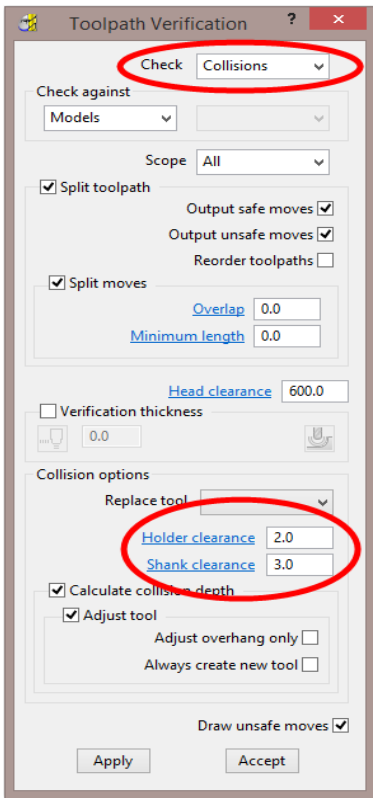

The two available, independent **Check** options are **Collisions** and **Gouges**.

Shank Clearance and **Holder Clearance**, allow the user to specify a value for an additional, safe thickness around the tool **Shank** and **Holder** elements.

28 In the **Check** box select **Collisions**.

29 Input values in the **Shank Clearance 2** and **Holder Clearance 3**.

30 Click **Apply**.

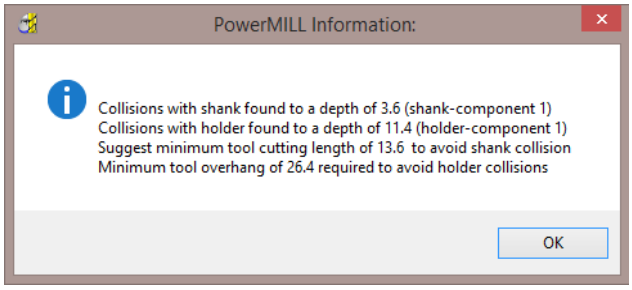

The above **PowerMILL Information** box appears with information on the status of the original tool and required dimensional changes. The default settings will result in a modified **tool** (**BN5_1**) being created along with 2 new **toolpaths** (The collision and non-collision parts of the original). The new **tool** (**BN5_1**) will then automatically exist in both the original and new (collision warning area) toolpath. The original **tool** (**BN5**) will remain in the new (collision safe area) toolpath.

31 Click **OK**.

32 Click **Accept** on the **Toolpath Verification** dialog.

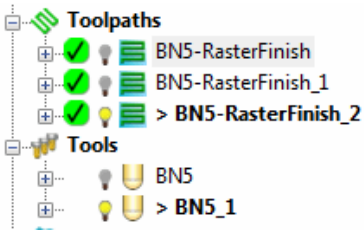

PowerMILL has created two new toolpaths, **BN5-Raster Finish_1** and **BN5-RasterFinish_2**. A new tool named **BN5_1** has also been created in the **Tools** area of the **PowerMILL *explorer***. This new tool has been created with the new valid adjustments made i.e. **Overhang 26.4**

33 **Activate** the toolpath **RasterFinish_1** in the **Explorer**.

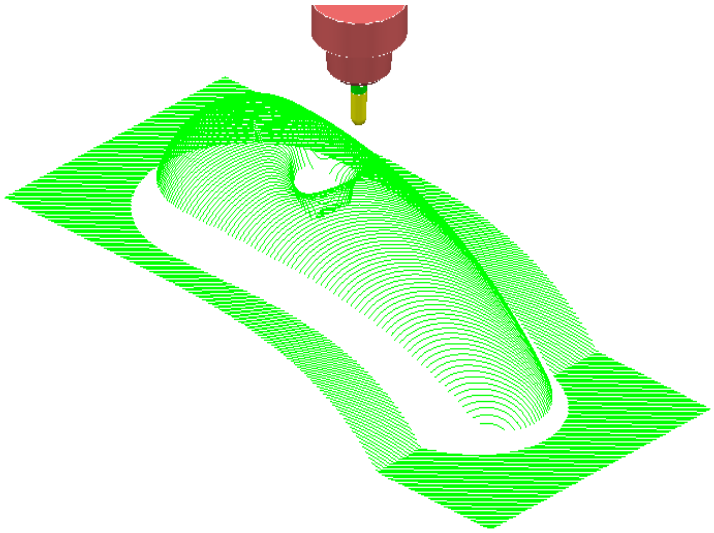

This **toolpath** contains the 'collision free' segments of **RasterFinish**, along with the original tool **BN5**.

 Copyright © Delcam Ltd

34 **Activate** the toolpath **RasterFinish_2** in the **PowerMILL** ***explorer***.

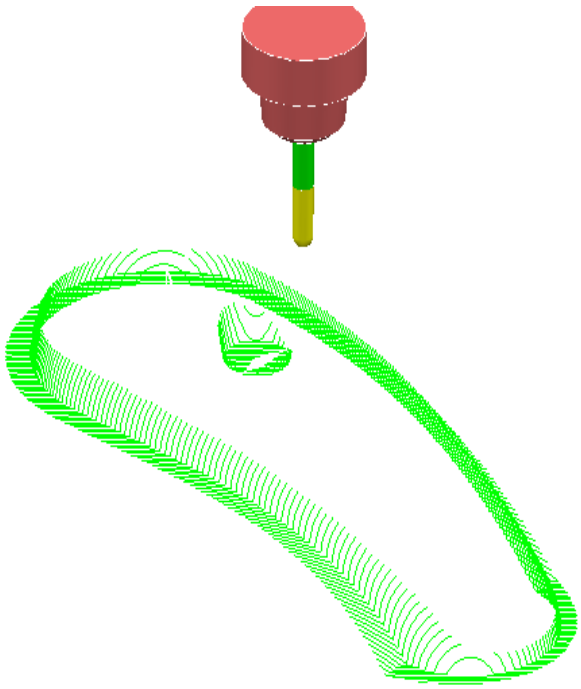

This **toolpath** contains the 'collision' segments of the **Raster Finish** if it were machined with the original **BN5** tool.

35 **Activate** the original toolpath, **BN5-RasterFinish**, in the **PowerMILL** ***explorer***.

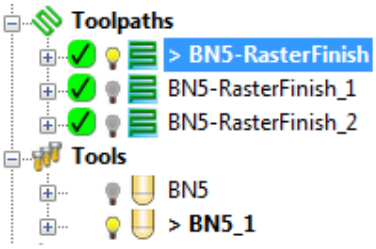

PowerMILL *has substituted a newly created* ***Tool***, ***BN5_1*** *(with an extended overhang) into* ***BN5-RasterFinish*** *and* ***BN5-RasterFinish_2****.*

36 Select **File > Save Project As**:

.....\COURSEWORK\PowerMILL-Projects\ToolCollisionExample

Direct Collision Checking (Automatic Verification)

Tool Holder Collision Checking can also be applied during **Toolpath** calculation.

If the **Toolpath** is calculated with a **Tool** definition that includes a **Shank** and **Holder** any part of the toolpath segments that would otherwise be in a collision condition will not appear. These missing segments can then be machined later using a modified **Tool** in conjunction with a **Collision Safe Boundary**.

1 Select **File > Delete All** and **Tools > Reset Forms**.

2 Select an **ISO 2** view.

3 **Open** the **Project**:

.....\PowerMILL_Data\Projects\ToolCollision_Start

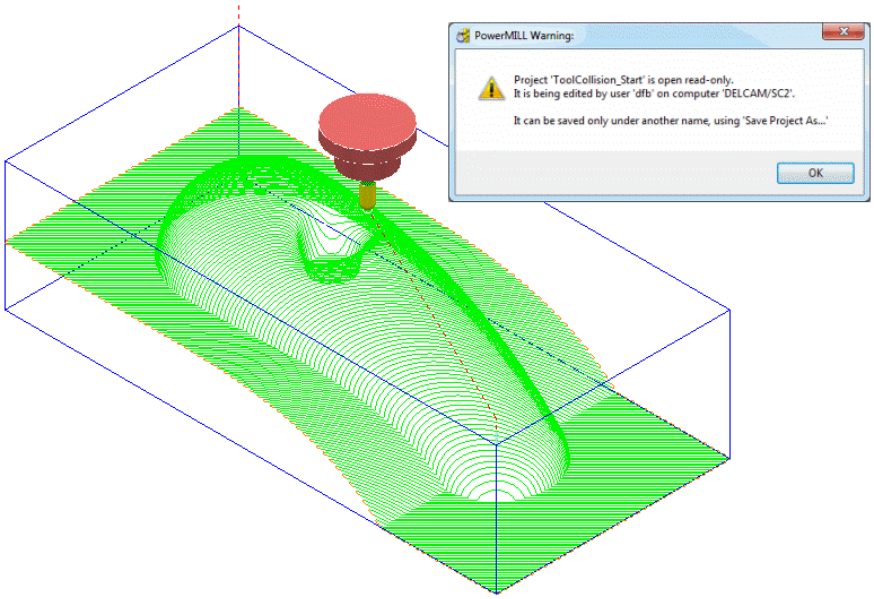

4 **Save Project As**:

.....\COURSEWORK\PowerMILL-Projects\ToolCollision-Auto

5 Right-click on the **RasterFinish** toolpath in the **PowerMILL *explorer***.

6 From the local menu, select **Activate** followed by **Settings** and in the **Raster Finishing** dialog select the ***Copy*** toolpath icon .

7 Select the **Automatic Verification** page to open the following dialog:

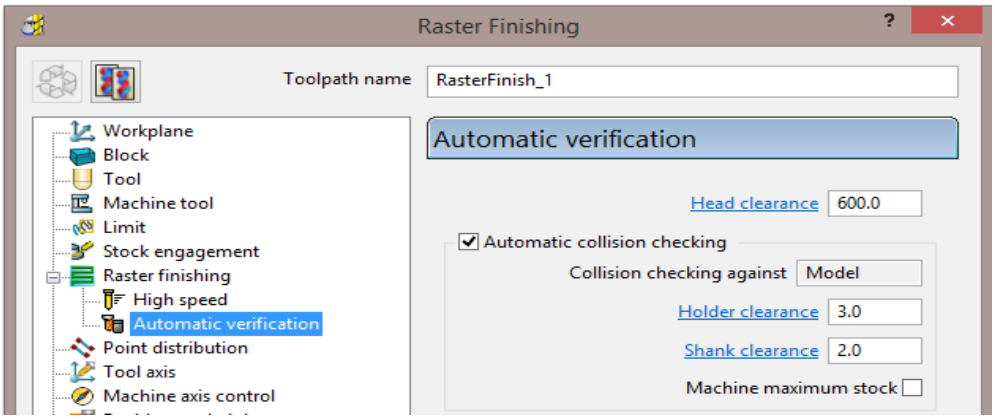

 Copyright © Delcam Ltd

8 Tick the **Automatic collision** checking box, then input the, **Holder Clearance** as **3** and **Shank Clearance** as **2**.

9 **Calculate** the **Raster Finishing** strategy to directly create a collision free toolpath, **RasterFinish_1**.

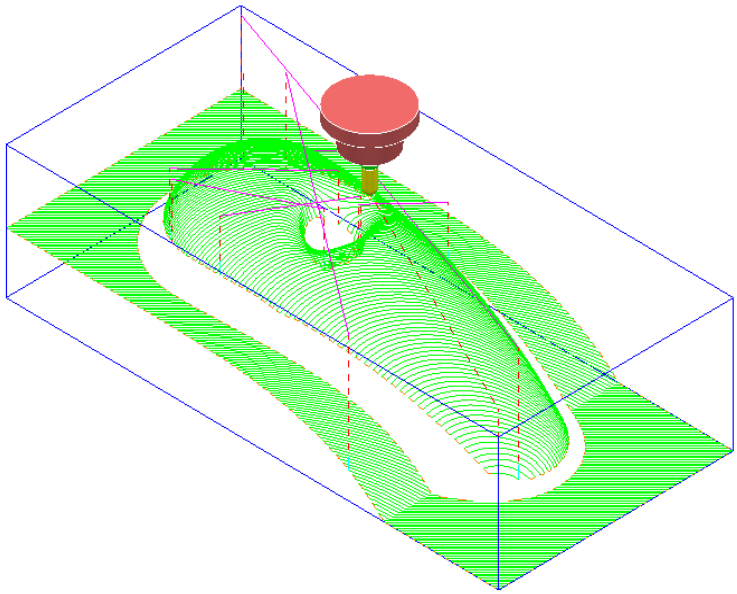

*This method does not produce any information for the user or automatically create a new collision free tool (**BN5_1**).*

Machine maximum stock

If the additional option **Machine maximum stock** is ticked then a full toolpath will be created with a varying increased **thickness** over the previously inaccessible areas.

10 Right-click on the **toolpath *RasterFinish_1*** in the **PowerMILL *explorer***.

11 From the local menu, select **Activate** followed by **Settings** and in the **Raster Finishing** dialog select the **Copy** toolpath icon .

12 With the **Raster Finishing** dialog open, select the **Automatic Verification** page to access the following dialog:

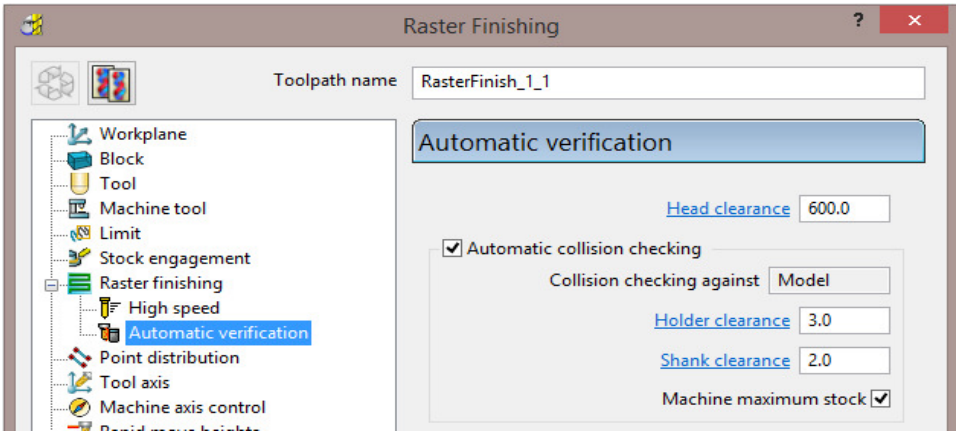

13 Tick - **Automatic collision checking**, input **Shank Clearance 2.0**, **Holder Clearance 3.0**, and **tick** - **Machine maximum stock**.

14 **Calculate** the **Raster Finishing** dialog to directly create a continuous, collision free toolpath, **RasterFinish_1_1**.

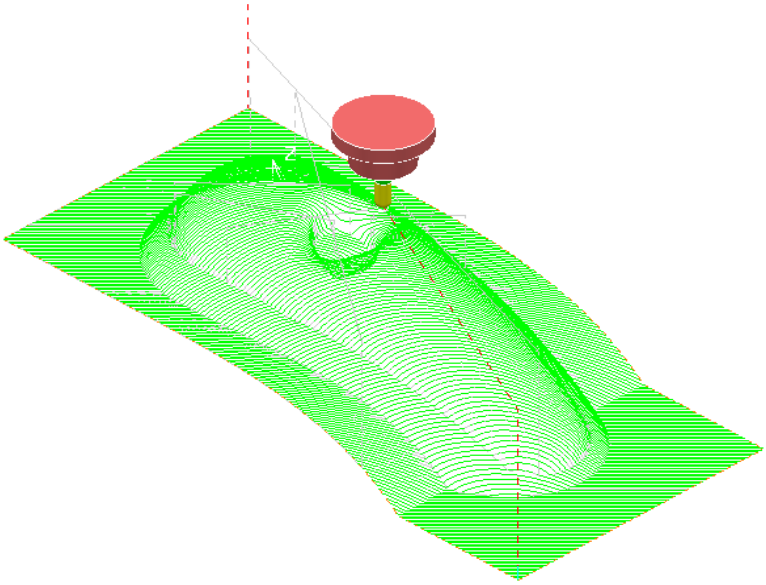

An additional strategy with a compatible (collision free) tool is required to remove the remaining stock.

Collision Safe Boundary

A toolpath for the remaining areas will require a new Dia 5 Ball Nosed tool with increased **Shank** length. The additional **Toolpath** will be calculated to limits set by a **Collision Safe Boundary** based on the current tool (**BN5**).

15 Ensure that the tool **BN5** is **Active**.

16 In the **PowerMILL *explorer***, right-click **Boundaries**, and from the local menu select **Create Boundary > Collision Safe**.

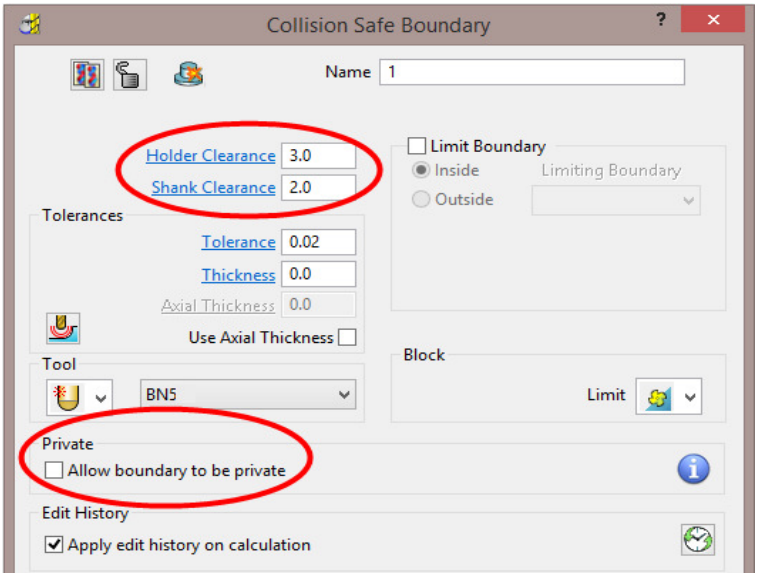

17 Use the above settings and **Apply** the dialog.

 Copyright © Delcam Ltd

18 Select and **Delete** all segments except the 2 shown below.

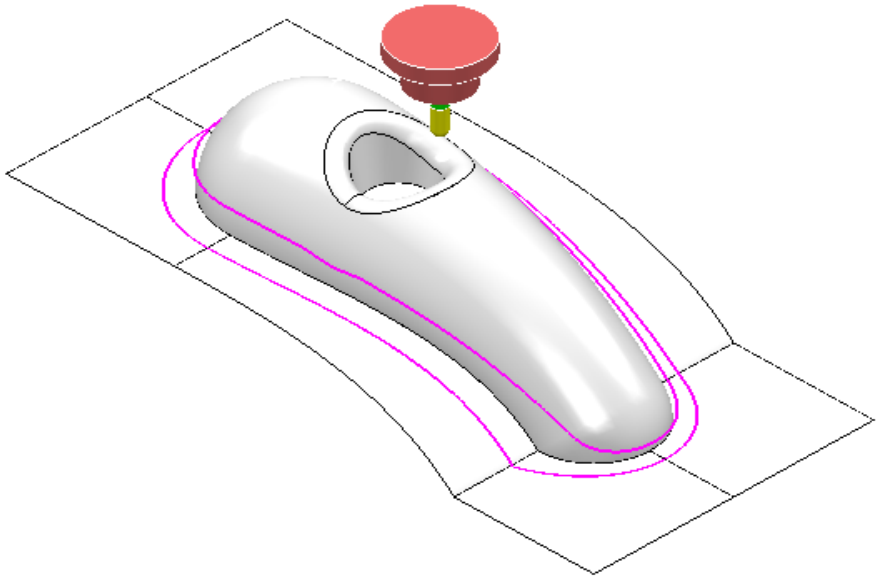

19 Create an empty **Pattern** and copy the outer **Boundary segment** to it.

*With the outer **Boundary segment** selected, use **left mouse key** and **CTRL key** to drag and drop **Boundary** (**1**) into **Pattern** (**1**) from within the **PowerMILL explorer**.*

20 Right mouse click on the new **Pattern** and from the local menu select **Instrument** to display the direction with an **arrow**.

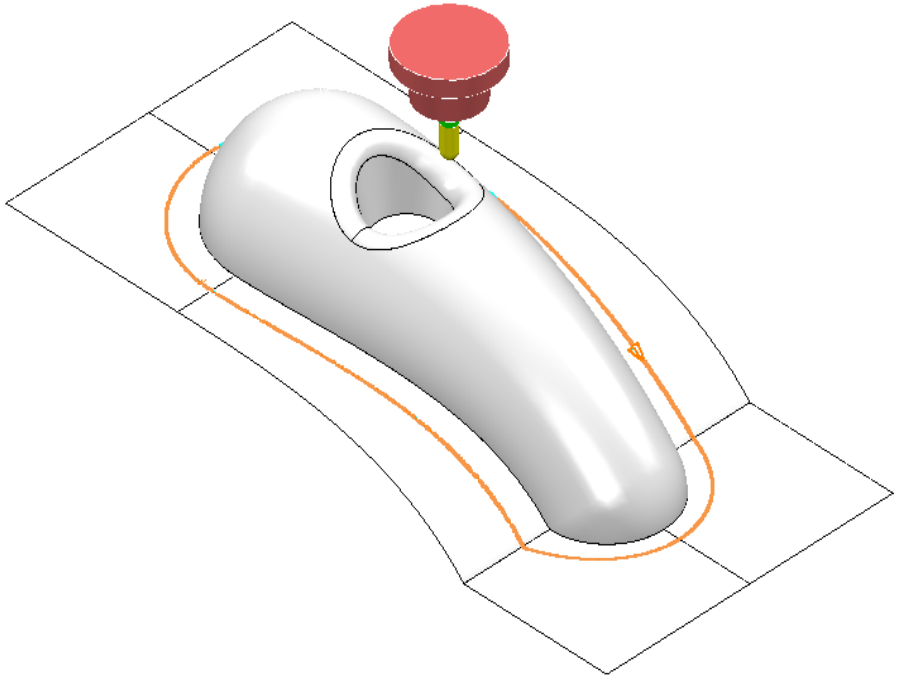

21 Select the **Pattern** segment and if necessary, select **Edit** – **Reverse selected** to set it to comply with a climb milling direction.

22 In the **PowerMILL *explorer***, right-click the Tool, **BN5**, and from the local menu select **Edit > Copy Tool** (to create **BN5-1**).

23 Right-click over the new tool **BN5-1** and from the local menu, select **Activate** followed by **Settings** to open the **Ball nosed tool** dialog.

24 For the **Tip** change the **length** to **15**.

25 Select the **Holder** tab and change the **Overhang** to **30**.

26 **Close** the form.

27 **Activate** the new 'long reach' **Tool BN5_1**

28 Select **Toolpath Strategies** on the **main** toolbar.

29 From the **Finishing** options select a **3D Offset Finishing** strategy and enter data as shown in the following form.

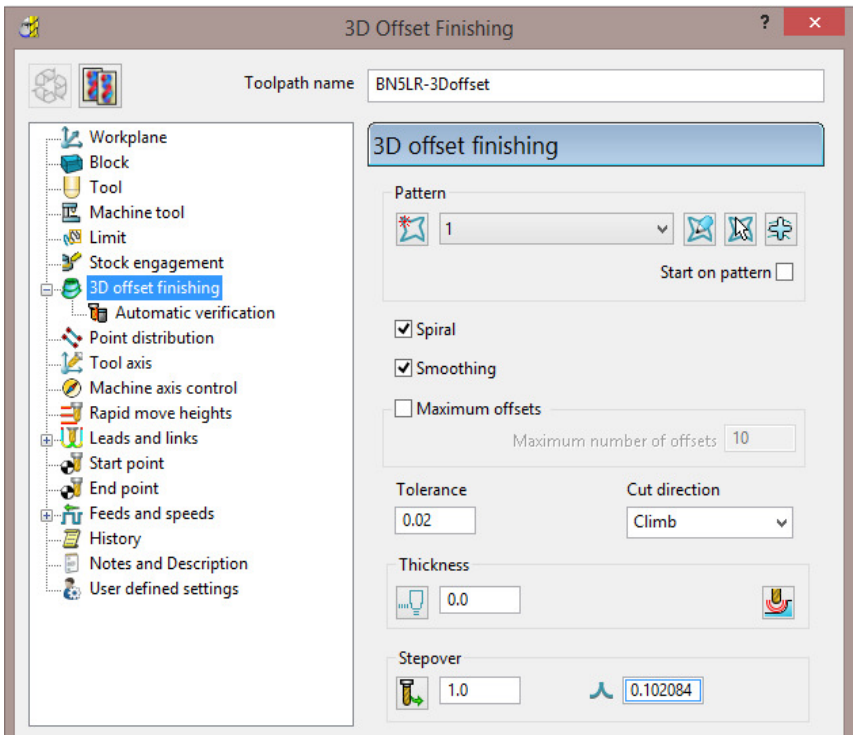

30 Select the **Limit** page and select **Boundary 1** with **Trimming > Keep inside**.

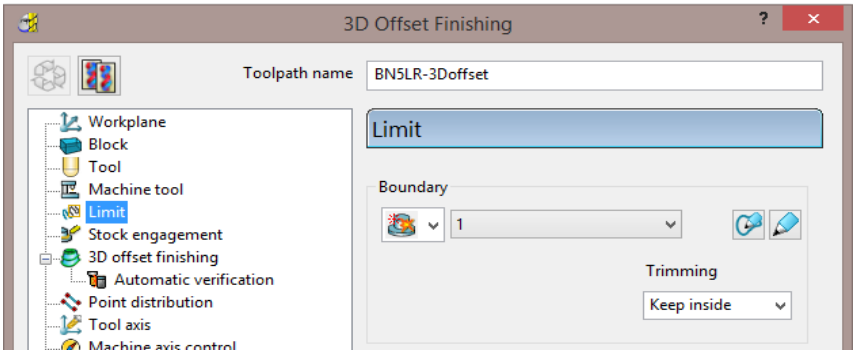

 Copyright © Delcam Ltd

31 Select the **Automatic Verification** page and tick **Automatic collision checking**, input **1** for both **Shank** and **Holder *clearances***, un-tick **Machine maximum stock**.

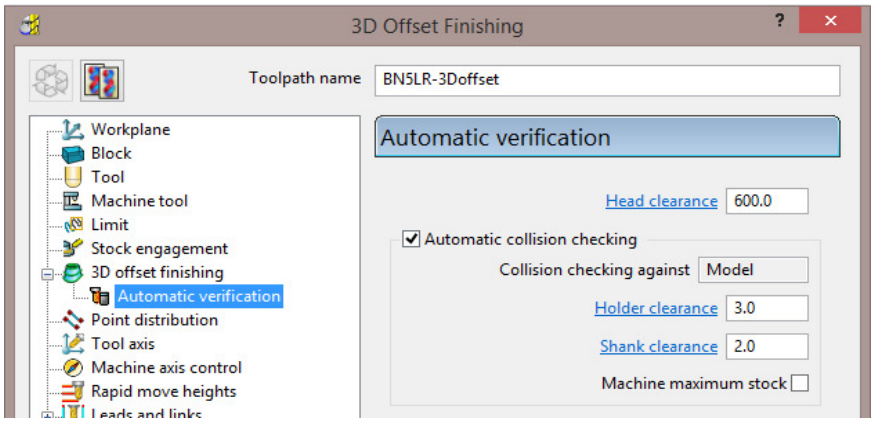

32 **Calculate** the toolpath and then **Close** the dialog.

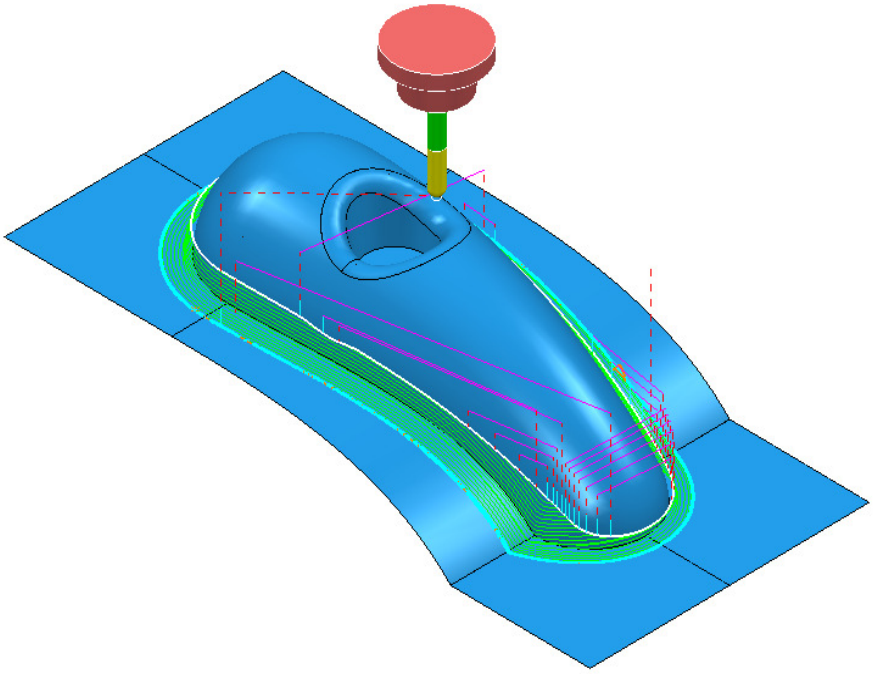

*The new toolpath does not exhibit any fragmentation, showing that the active **Automatic Collision Checking*** has not detected any problems.

33 Select **Save Project** to update:

.....\COURSEWORK\PowerMILL-Projects\ToolCollision-Auto

Toolpath Gouge/Collision - Safety Status

When a **Toolpath** is calculated the ***symbol*** to the left of the light bulb in the **PowerMILL *explorer*** indicates the ***Safety Status*** for **Gouges** (Tip/Flutes) or **Collisions** (Shank/Holder).

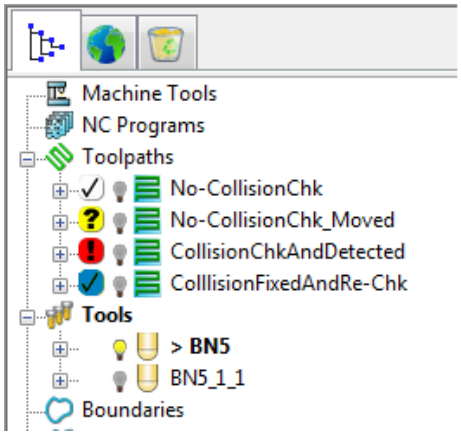

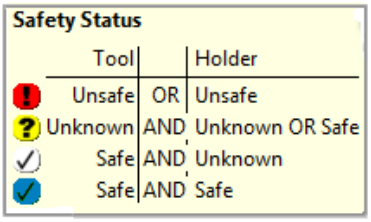

To display the 4 different levels of **Safety Status**, position the mouse over a ***symbol*** in the **PowerMILL *explorer*** and the information form will open (shown above right).

Copyright © Delcam Ltd

10. Patterns

Introduction

Patterns are 2D or 3D Wireframe entities used primarily for the control and creation of toolpaths. A selection of **Pattern** creation and manipulation options are provided in a dedicated **Toolbar** (as shown below).

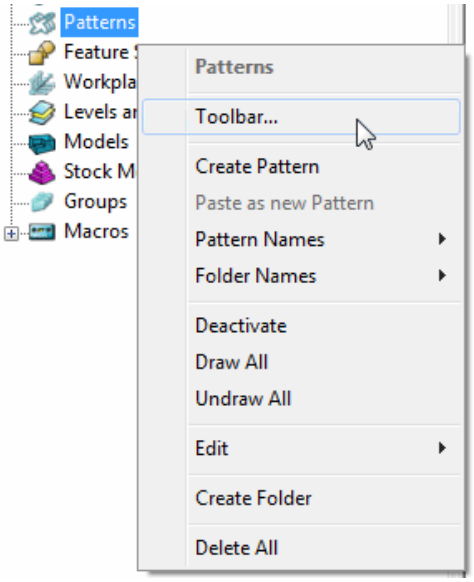

Below is a summary of the **Pattern - toolbar** options:

- **Create Pattern** (empty). This will also make the other **toolbar** options active.

- **Activate the picked pattern**.

- **Pick curves to add to the active Pattern**.

- **Automatic Pattern Generation** (Open the ***Pattern Maker*** form).

- **Insert File into Active Pattern** (eg. dgk, pic, dxf, iges).

- **Save Active Pattern as a file** (dgk pic dxf).

- **Insert Boundary into Active Pattern**.

- **Insert Active Toolpath into Active Pattern**.

- **Insert Model into Active Pattern** (Selected Model).

- **Curve modelling**.

- **Wireframe modelling** (PS-Sketcher).

- **Transform pattern**

- **Curve Editor**.

- **Clear**

*The **Pattern** segments can be edited directly from local menu options, or via the **Curve Editor**. Unlike **Boundaries**, **Patterns** can contain open segments.*

When an empty **Pattern** is created it is automatically assigned a number and made **Active** as shown in the **PowerMILL** ***explorer***.

Automatic Pattern Generation

The **Automatic Pattern Generation** icon opens the **Pattern Maker** dialog. This provides options for the user to construct a range of wireframe layouts that can be used in the **Pattern Finishing** strategy.

1. Select **File > Delete All** and **Tools > Reset Forms**.
2. **Import** the **Model**:

   .....\PowerMILL_Data\Models\phone.dgk

3. Select **Block** and **Calculate** using the default settings.
4. Define a dia 12mm Ball Nose tool named **BN12**.
5. Reset the **Rapid Move Heights** .
6. Select an **ISO1** view to display the **model**.

 Copyright © Delcam Ltd

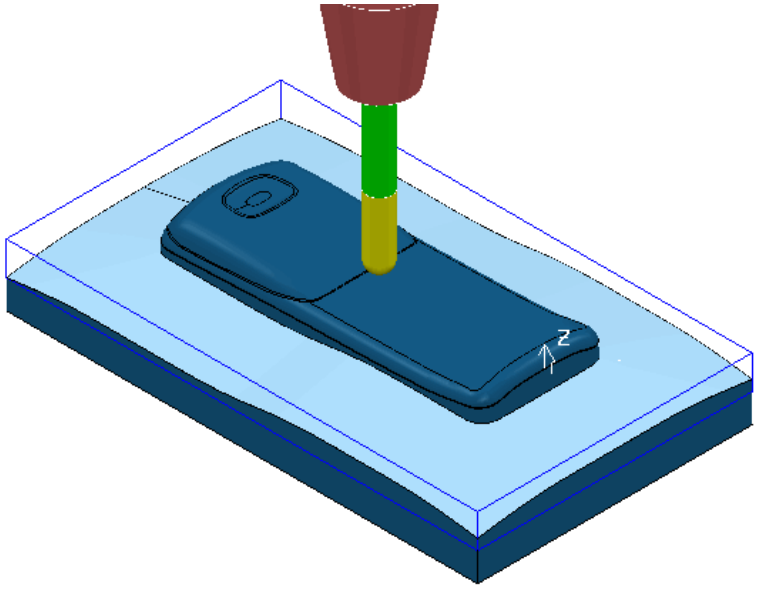

7 Select the 'shutout' **surface** as shown above.

8 In the **PowerMILL *explorer***, right-click on **Boundaries**, and from the local menu select the option **Selected Surface** and enter the values shown below.

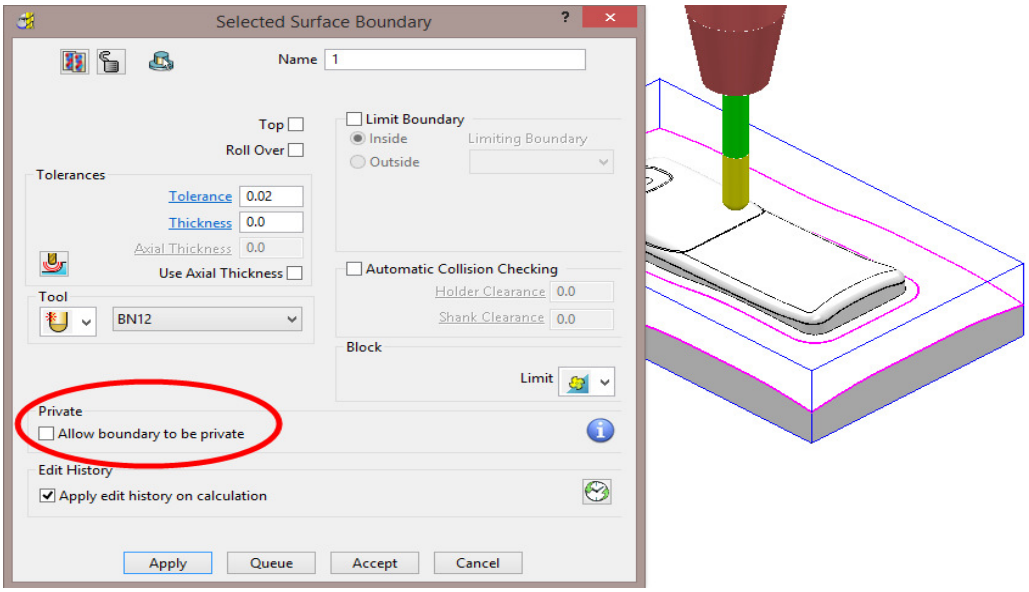

9 **Apply** the dialog to create 2 **Boundary** segments.

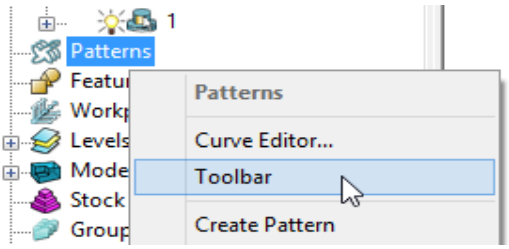

10 In the **PowerMILL *explorer***, right click on **Patterns** and from the local menu select **Toolbar**.

11 In the **Patterns** toolbar select, **Create a new (empty) Pattern** .

12 In the graphics area, select the inner **Boundary** segment.

13 In the **Patterns** toolbar select the option to **Insert Boundary into Active Pattern** .

14 Delete the **Boundary**.

Once the selected **Boundary** segment is copied as a **Pattern** segment the **Boundary** is no longer of use.

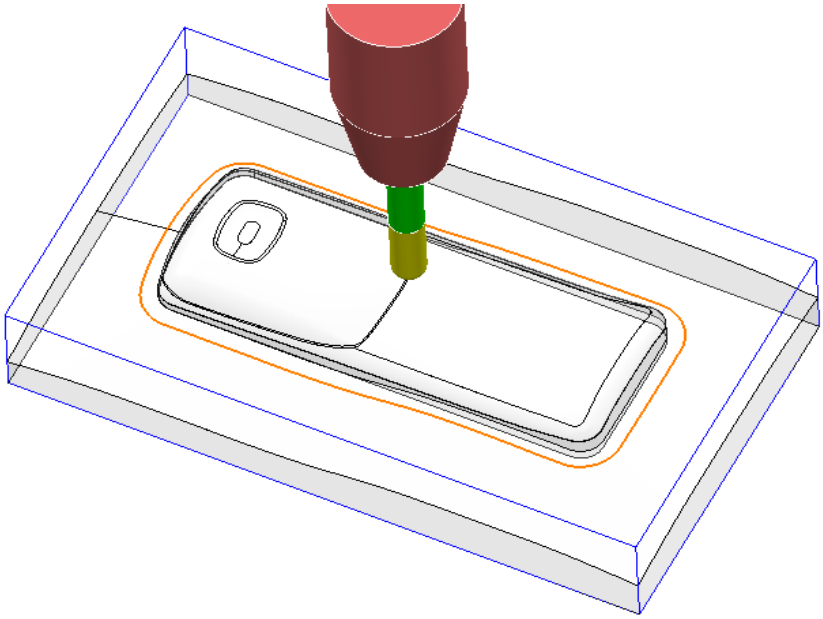

15 Right-click on the **Pattern** segment and from the local menu, select **Curve Editor**.

16 In the **toolbar** move the cursor over **Transformations** and from the attached vertical toolbar, select the **Offset** option .

17 Select **Keep Original** , the **Round Corners** option, and input **Distance 50** before clicking the ***Enter*** key.

18 In the **Curve Editor** toolbar, click to accept.

 Copyright © Delcam Ltd

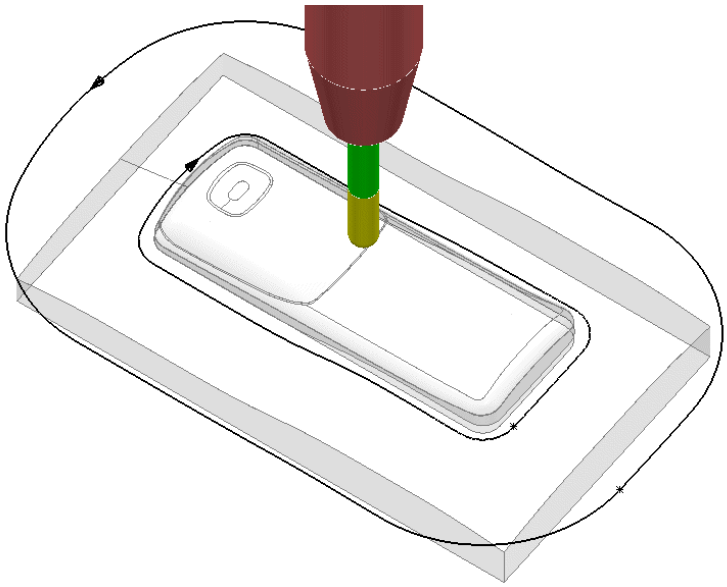

19 Right-click on the **Pattern** and from the local menu, select **Instrument** to display the direction arrows on the segments as shown in the image above.

20 Select the inner **Pattern** segment and from the local menu select **Edit > Reverse Selected** (Both **Pattern** segments should now run in the same direction).

The **Automatic Pattern Generator** will be used to create a new **Pattern** with a series of segments merged between the 2 segments from the original **Pattern**. The resultant **toolpath** will follow the contour of the component form as well as creating corner free, tool tracks with a constant material removal rate.

21 From the **Pattern** toolbar, select **Create Pattern** to create a new **Pattern**.

22 Select **Automatic Pattern Generation** .

23 With the new (empty) **Pattern** activated and the original **Pattern** displayed, select both visible segments.

24 Select **Create Pattern** along 'one-way curves' with a **Stepover 1.0**

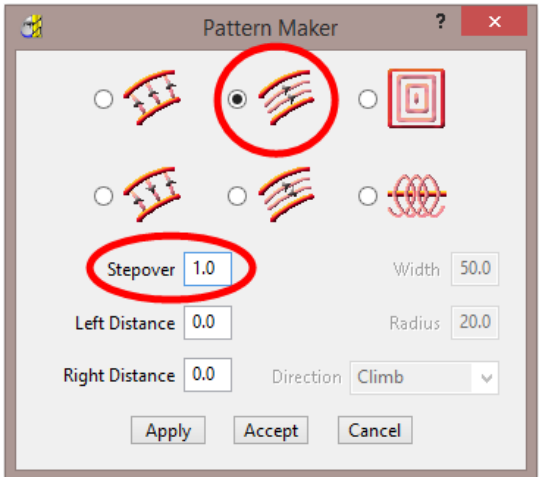

The form allows the user to create a range of multi-segment **Pattern** styles from either 1 or 2 drive curves.

25 Click **Apply**, followed by **Accept**.

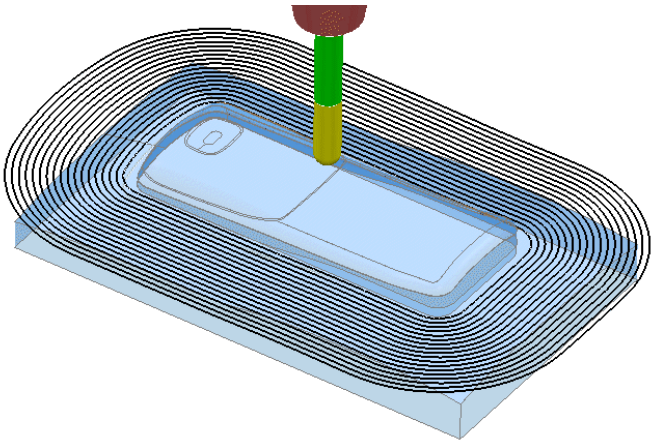

The new **Pattern** has been generated independently; between the two selected segments of the original, de-activated **Pattern** (the above illustration shows a larger 2mm Stepover for visual reasons).

The new **Pattern** will now be used in a **Pattern Finishing** strategy.

26 In the **Strategy Selector**, **Finishing** options, select a **Pattern Finishing** strategy.

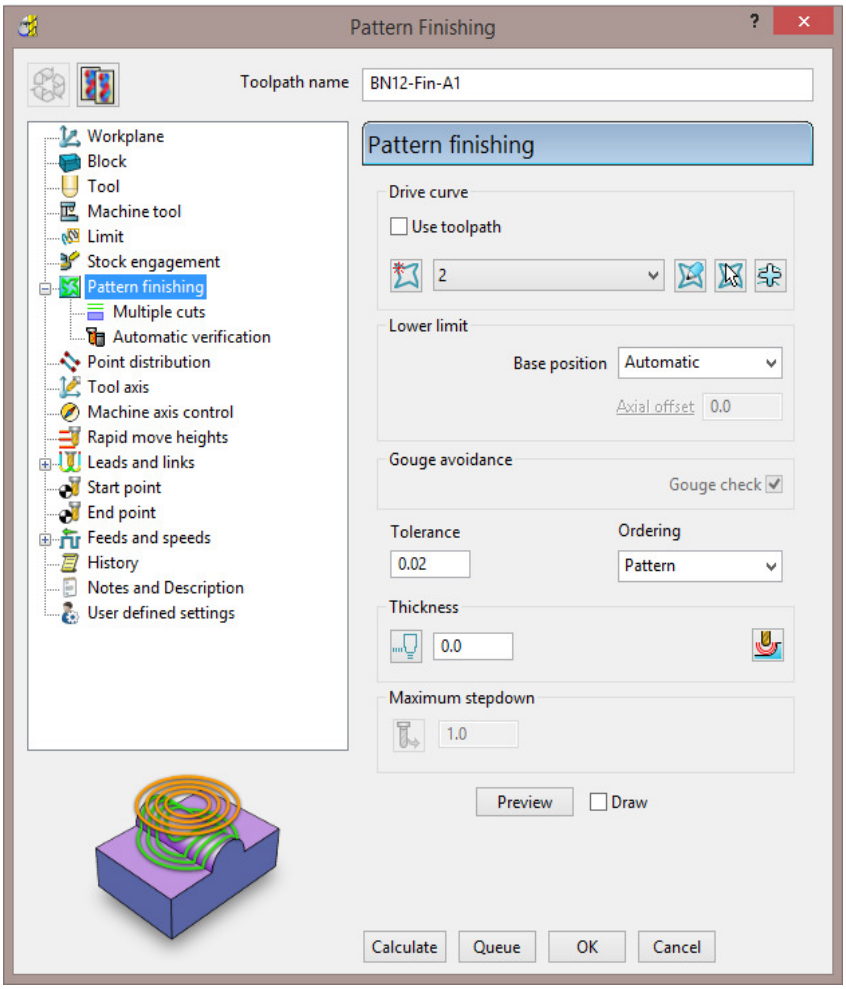

27 Enter the data into the above form exactly as shown above, click **Calculate**, and then **Close** the form.

 Copyright © Delcam Ltd

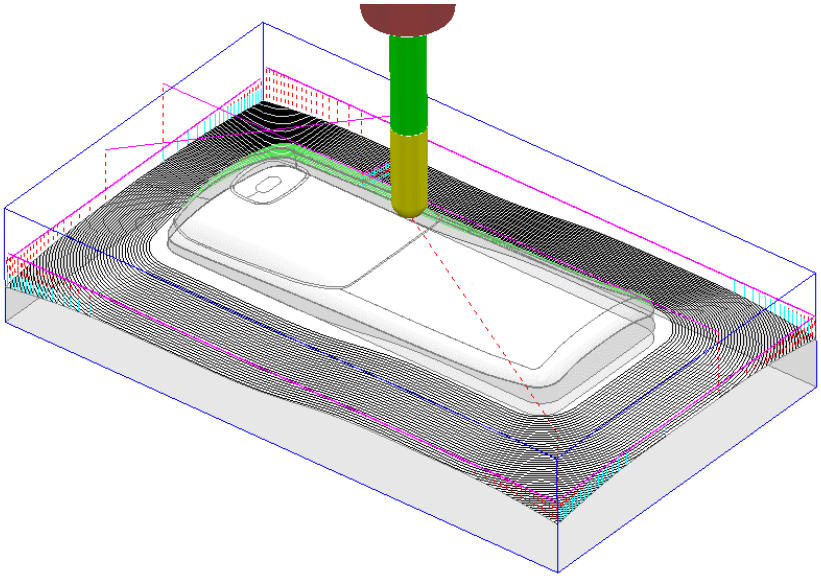

The **Pattern Finishing** toolpath is limited to exist within the defined material **Block**.

Exercise

28 Right mouse click on the new **toolpath** and from the local menu select **Edit > Reorder**.

29 Use both the ***Reverse Order*** and ***Reverse Direction*** editing options for the **Toolpath** to start from the outside, ***Climb Milling*** towards the centre of the model.

30 **Save** the **Project**.

Patterns applied to 3D Offset machining

A **Pattern** can be used as a curve to be offset across the area of a **3D Offset Finishing** strategy.

1 Select **File > Delete All** and **Tools > Reset Forms**

2 **Import** the **model**:

.....\PowerMILL_Data\Models\speaker.dgk

3 **Save Project As**:

.....\COURSEWORK\PowerMILL_Projects\SpeakerPattern-EX1.dgk

4 Define a Dia 6 Ball Nose tool with the name **BN6**.

5 Define a **Block** to the default Min/Max limits.

6 **Calculate** the **Rapid Move Heights** to the default settings.

7 Select an **ISO3** view.

8 Select the 3 shaded **Surfaces** as shown in the following diagram.

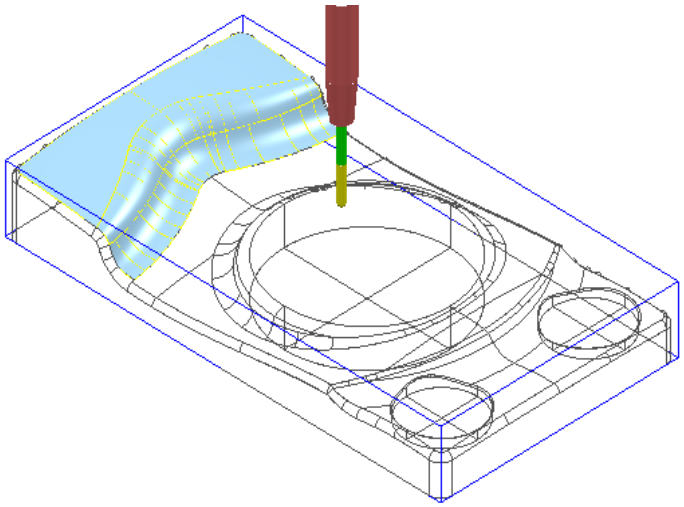

9 Create a **Selected Surface**, **Boundary** with ***allow boundaries to be private*** un-ticked, and with a **Tolerance** value of **0.02**

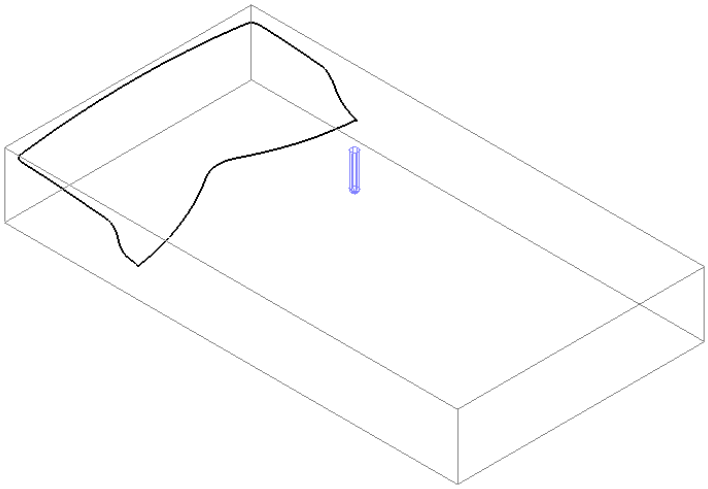

 Copyright © Delcam Ltd

10 From the **Pattern** toolbar click **Create Pattern** followed by **Insert Boundary into Active Pattern** (Input **Boundary** name into the dialog!).

11 Undraw the **Tool**, **Block**, **Model** and **Boundary** to visually isolate the new **Pattern**.

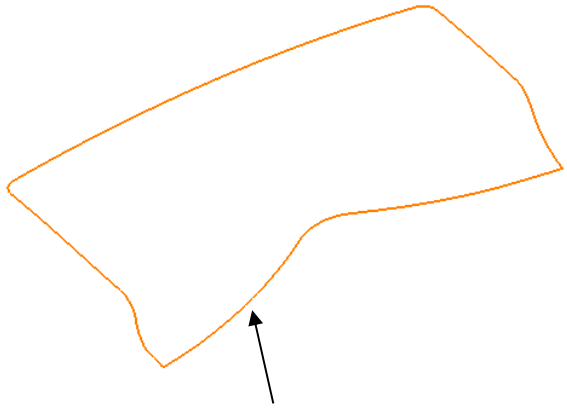

*Only the leading edge of the **Pattern** is required. The remaining parts are to be removed.*

12 Select the **Pattern** segment using the left mouse key.

13 Right mouse click on the **Pattern** and from the local menu, select **Curve Editor** to open the following toolbar:

14 Select the option **Cut Item**.

While performing the next operation it is essential to zoom in as close as possible to the end of the pattern segment!

15 Move the cursor over the left hand end of the leading edge to locate the **Key Point** and then left click to cut the segment at this point.

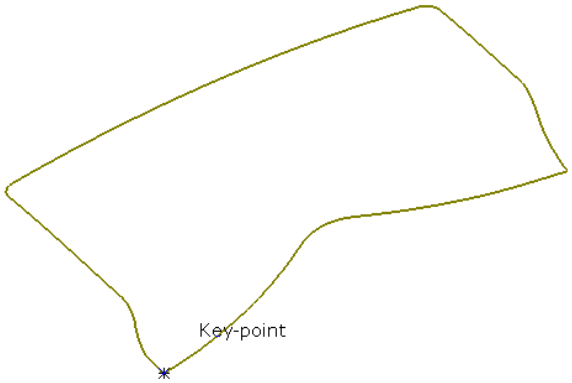

16 Select the leading edge, segment again, locate the **Key Point** and cut exactly at the right hand end of the leading edge.

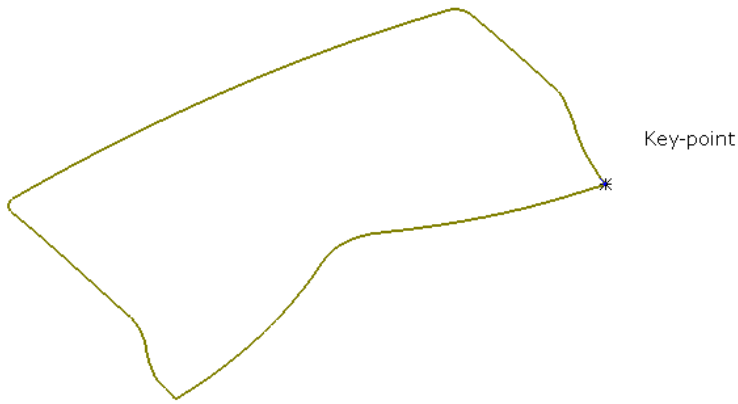

17 Click on the option **Cut Item** again to de-select it.

18 Select the **Pattern** segments away from the leading edge, and **Delete** .

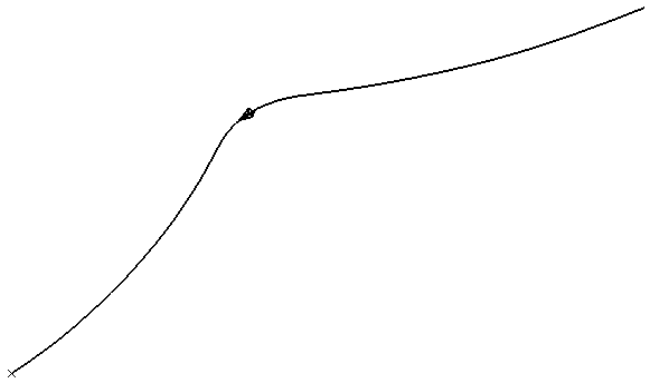

19 Click the green tick to **Save** the above new segment and close the **Curve Editor** toolbar.

20 Right mouse click on the **Pattern** segment and from the local menu, select **Instrument** to display the direction of the segment.

21 If it is not running in the direction (shown above), right mouse click on the **Pattern** segment and from the local menu select **Edit > Reverse Selected**.

22 Re-draw the **Tool**, **Model** and the ***Active* Boundary**.

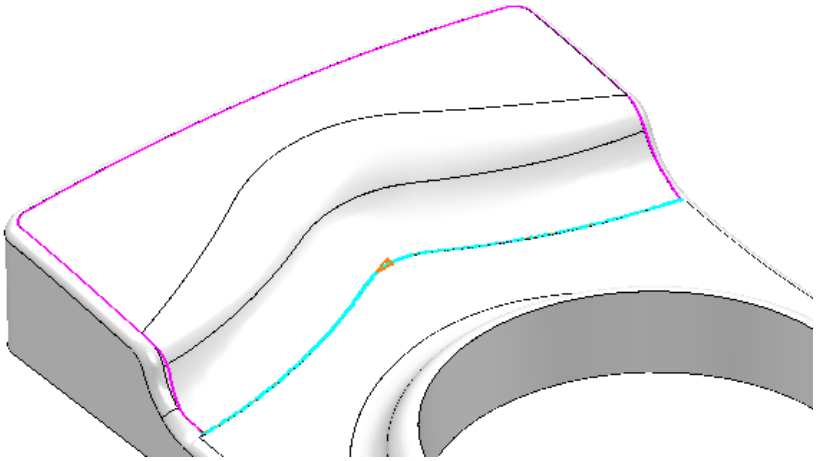

 Copyright © Delcam Ltd

23 Select a **3D Offset Finishing** strategy and enter data into the dialog exactly as shown below.

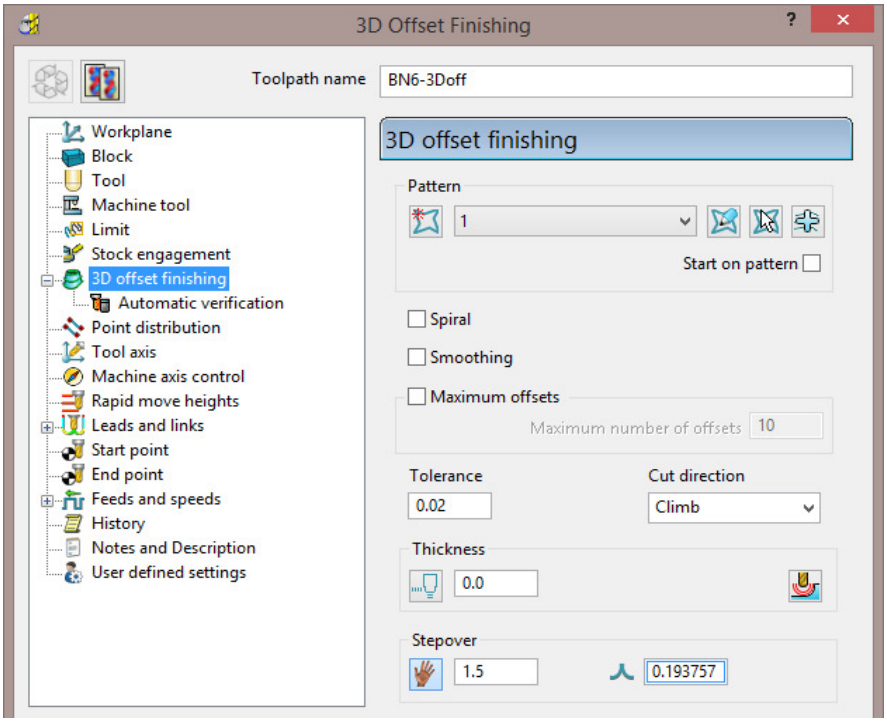

24 Click **Calculate** to create the **toolpath** and then **Close** the dialog.

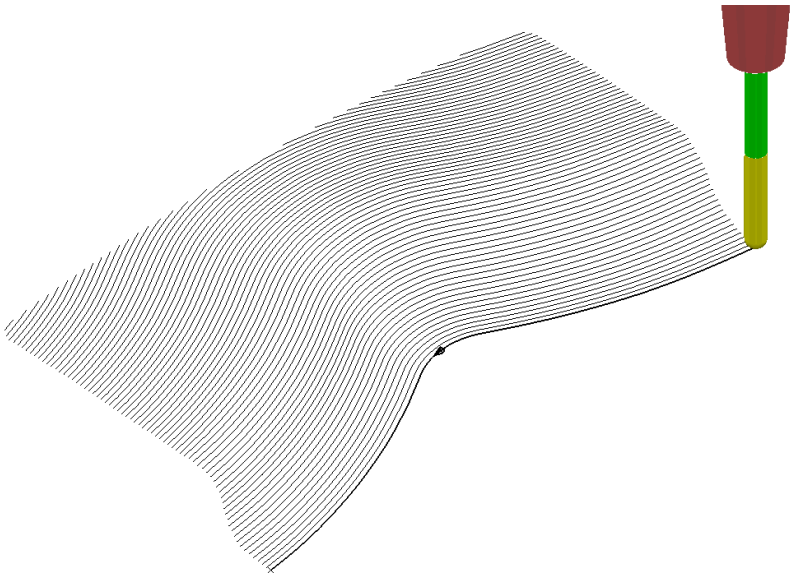

Leads and Links are not displayed to provide a clearer view of the **toolpath**.

The above toolpath starts at the lowest point following the **Pattern** while offsetting across the limiting **Boundary** in a **Climb Milling** direction. With the addition of suitable **Lead In** and **Lead Out** moves this is an ideal strategy for ***High Speed Machining*** applications.

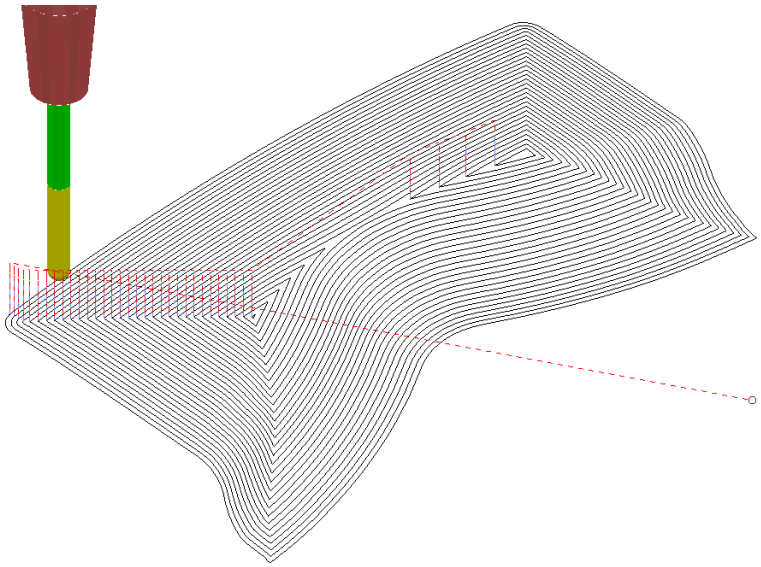

If a **Pattern** is not selected in the **3D Offset** dialog, machining strategy follows the shape of the **Boundary** segment, as shown above.

25 **Save** the **Project**.

Exercise - 3D Offset Finishing controlled by Pattern

It is not compulsory for the **Pattern** for controlling the toolpath to be coincident with the limiting **Boundary**. In the following exercise a **3D Offset Finishing** will be controlled by a **Pattern** that runs centrally along the base of a curved recess:

1 Select **File > Delete All** and **Tools > Reset Forms**

2 **Open** the **Project**:

.....\PowerMILL_Data\Projects\PatternBlock_Start

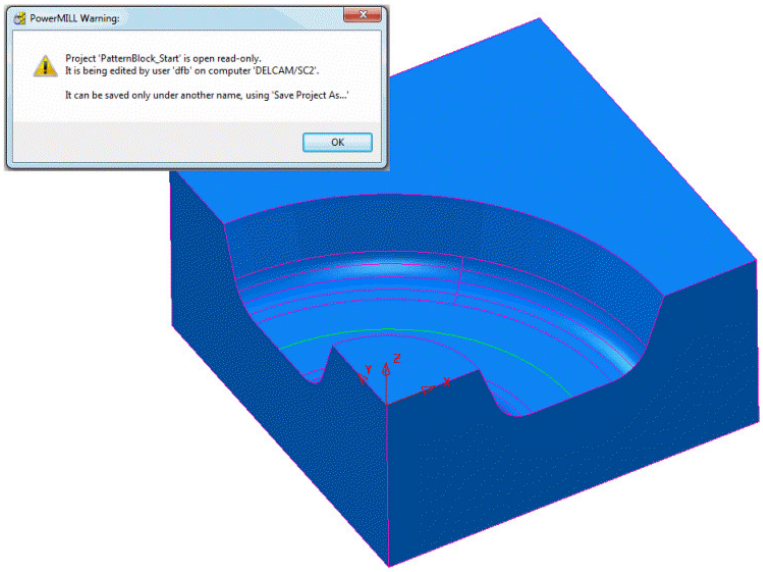

3 Click **OK** to close the ***PowerMILL Warning*** and **Save Project As**:

.....\COURSEWORK\PowerMILL-Projects\PatternBlock_ex1

4 **Calculate** the **Block** using the default settings.

 Copyright © Delcam Ltd

5 **Calculate** the **Rapid Move Heights** to the default settings.

6 In the **Viewing toolbar** switch on display **Wireframe** .

7 Create a **Pattern** using **Insert Model** on the ***wireframe arc*** (included with the **Model**) running centrally along the recessed form.

8 Select the 5 **surfaces** that define the recessed form and create a **Selected Surface**, **Boundary** using a **0.01 tolerance**, with the **BN16** tool active.

9 Create a **3D Offset Finishing** strategy that is limited **Inside** the **Boundary** with the order and shape of the tool tracks controlled by the **Pattern**.

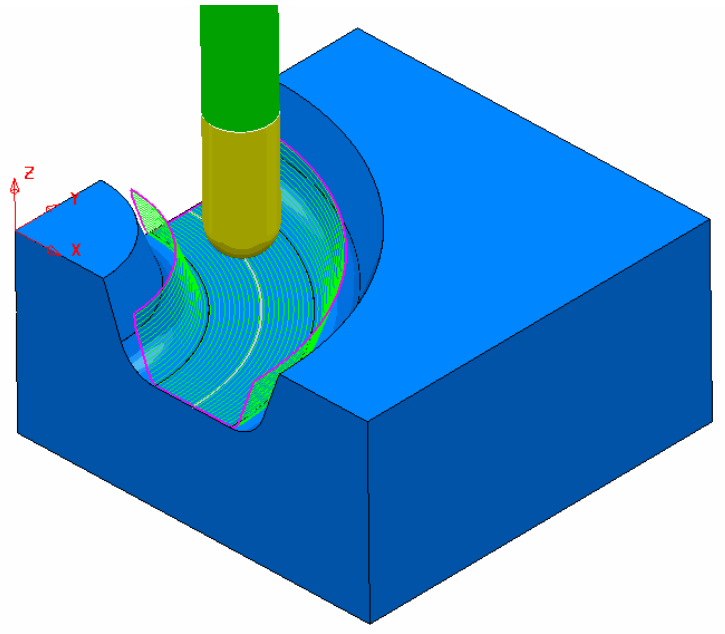

10 **Save Project As**:

.....\COURSEWORK\PowerMILL_Projects\PatternBlock-EX1

Deep Pattern machining

If **Pattern Finishing** is applied with a –ve **Thickness** it will only create **tool tracks** where the –ve **Thickness** value is less than the **tool**, ***tip radius***. As an example, this makes it impossible to use a –ve **Thickness** value less than zero where an **End Mill** is being used.

It is, however, possible to produce a **Pattern Finishing** strategy that machines deeper into the model if **Axial Offset** is used in place of a –ve **Thickness** value. This is achieved by first projecting the **Pattern** onto the surface (relative to the tool geometry). **Pattern Finishing** is then applied using the ***Drive Curve*** option with a –ve, **Axial Offset** value while **gouge checking** is unticked.

*The strategy produced will not be based on a 3D offset of the model form but a series of copies of the **Drive Curve** stacked downwards.*

1 Select **File > Delete All** and **Tools > Reset Forms**.

2 **Open** the read only **Project**:

..... \PowerMILL_Data\Projects\DeepPattern_Start

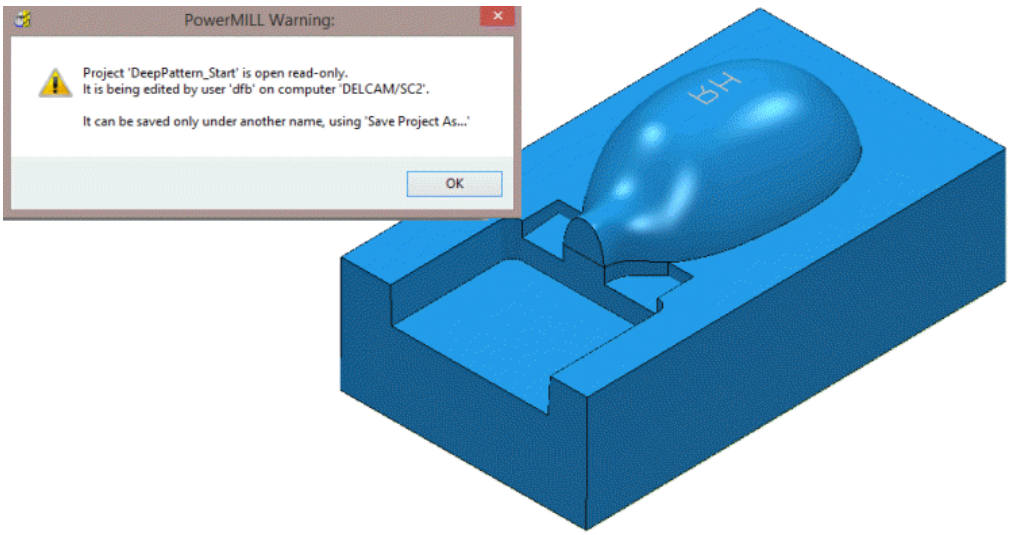

3 Click **OK** to close the **PowerMILL Warning** and **Save Project As**:

.....\COURSEWORK\PowerMILL-Projects\DeepPattern-EX1

The **Project** consists of component surfaces and a **Pattern** on **Z0** representing the text 'RH' ready to be engraved into the component form to a depth of **-3**.

4 **Calculate** a **Block**, ***Defined By*** **- Box**, using ***Type*** **- Model**.

5 Create a Dia 5 Ball Nosed tool with the name **BN5**.

6 **Calculate** the **Rapid Move Heights** to the default settings.

7 In the **PowerMILL *explorer***, right-click over the **Pattern 1** and from the local menu select, **Edit > Drop** to project it downwards onto the model.

*This projects the **Pattern** down Z, while compensating for the tooling parameters.*

 Copyright © Delcam Ltd

8 From the **main** toolbar, select **Toolpath Strategies** and in the dialog select **Finishing** followed by the **Pattern Finishing** option.

9 Enter the data into the dialog exactly as shown, using ***Base Position*** **Automatic** with ***Thickness*** **-3** and then click **Calculate**.

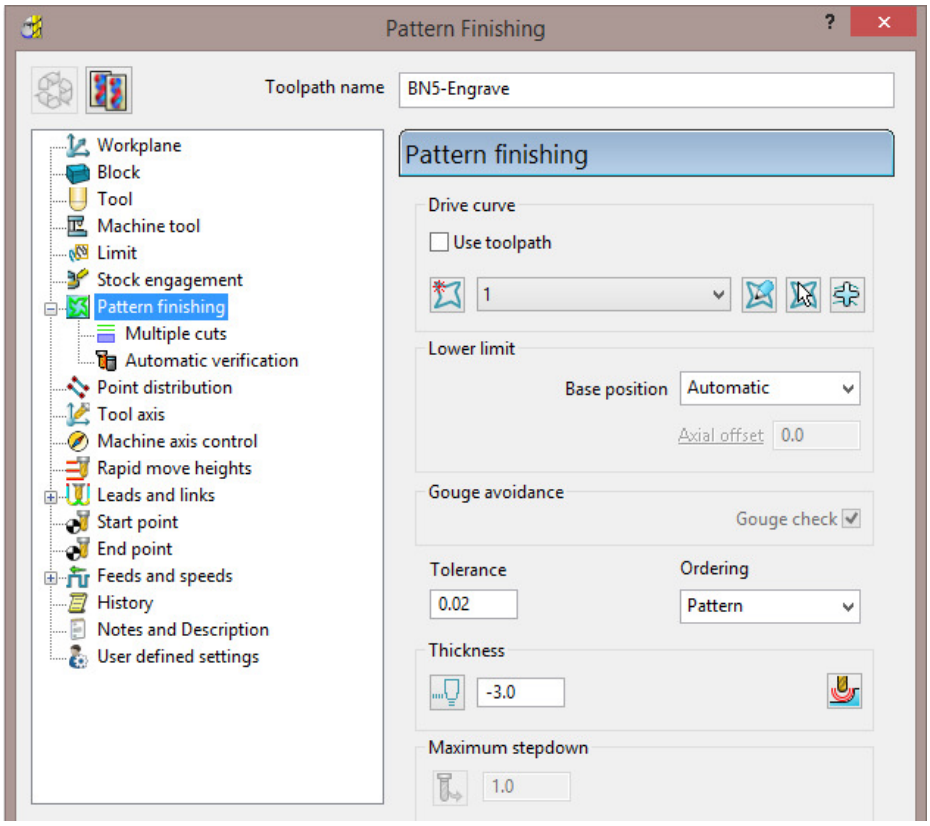

*The **Thickness** of **-3.0** exceeds the Tip Radius of the Dia 5 Ball Nosed tool hence instead of a toolpath appearing, the following **PowerMILL Error** form is displayed.*

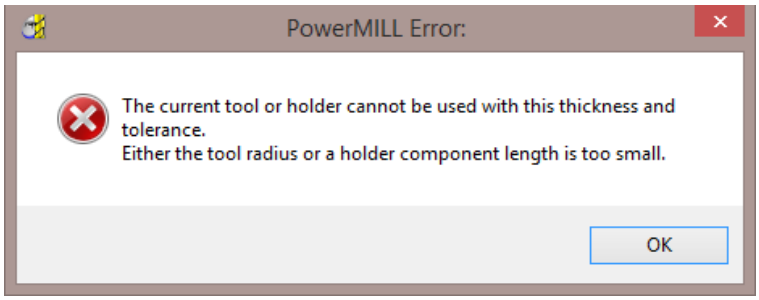

10 Click **OK** to close the ***PowerMILL Error*** message and recycle the **Pattern Finishing** toolpath using the data as shown in the following image.

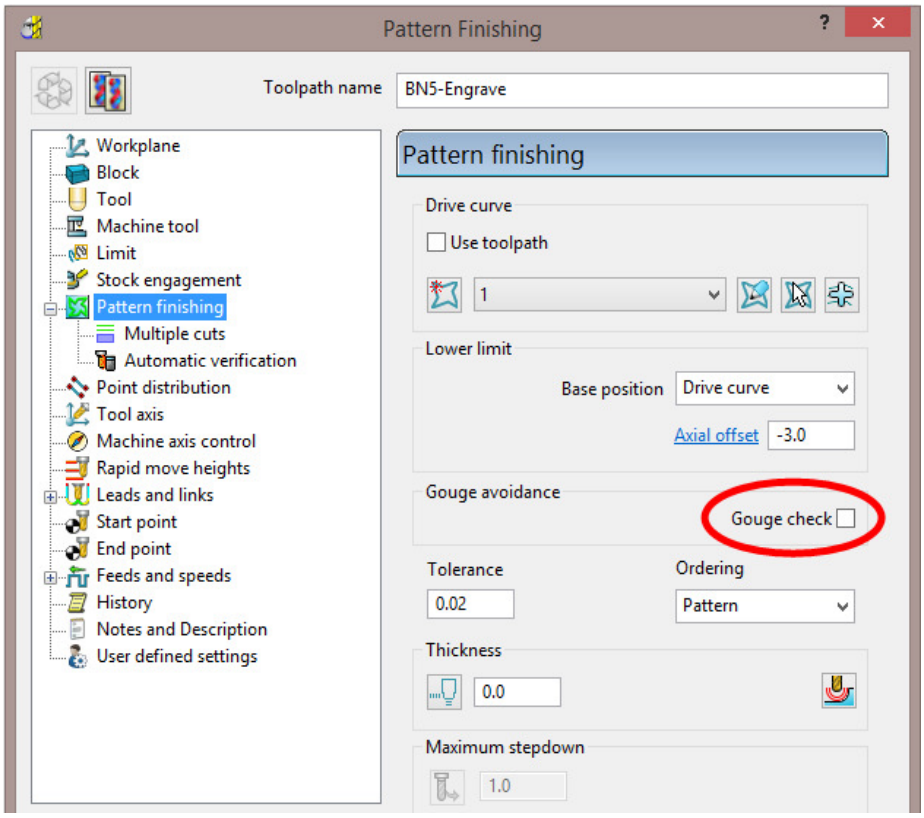

Base Position - **Drive Curve**

Axial Offset **-3.0**

Gouge Check – **un-ticked**

Thickness **0**

11 Select the **Multiple cuts** page and input data exactly as shown below.

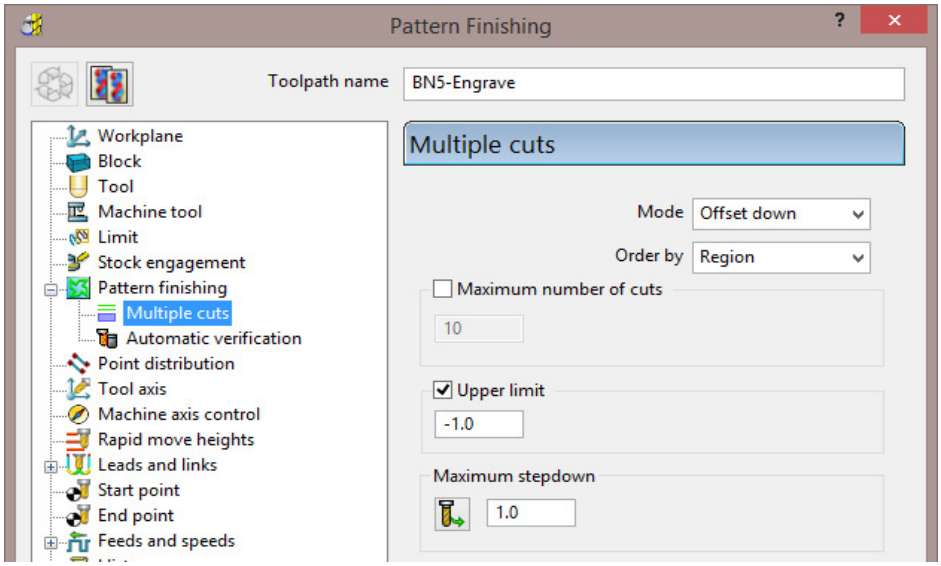

Mode - **Offset down**

Upper limit – **Ticked** with value **-1.0** (First pass at 1mm below the **Pattern**)

Maximum Stepdown **1.0**

12 Click **Calculate** to create the **toolpath** and then **Close** the dialog.

 Copyright © Delcam Ltd

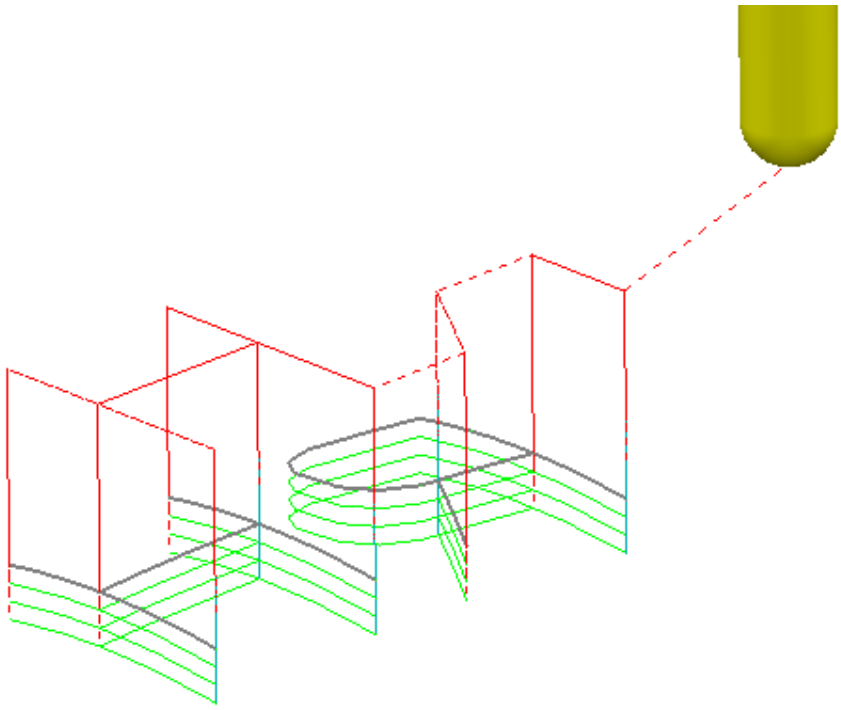

The Reversed lettering, Pattern 'RH' is now recessed into the Punch form to a depth of 3mm.

*The **Toolpath** will initially be identified in the **PowerMILL explorer** with a **yellow warning**.*

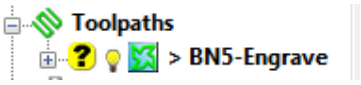

13 Right mouse click on the **Toolpath** and from the local menu select **Verify** > **Toolpath**.

14 In the **Toolpath Verification** dialog (with the default **Check** – **Gouges** set) select **Apply**.

Once verified for **gouges**, the above ***Toolpath* BN5-Engrave** will then be identified in the **PowerMILL *explorer*** with a **red warning**.

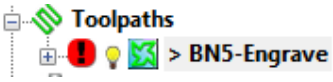

15 **Save** the **Project**.

 Copyright © Delcam Ltd

11. Curve Editor

Introduction

This is a ***wireframe constructor*** within **PowerMILL** that provides the user with a powerful set of tools for the creation and modification of **Boundaries** and **Patterns**. It is accessed via the local **Boundary** or **Pattern** menu option, **Curve Editor...**. During construction, the **Intelligent Cursor** option allows geometry items to be snapped onto **key points** on a displayed CAD model.

Input of Drawing detail as a Pattern using the Curve Editor

An empty **Pattern** can be inserted into the **Curve** editor thereby providing the user with an effective way to input ***Drawing Detail*** which could in turn be used in the creation of 2.5D **Feature** Sets.

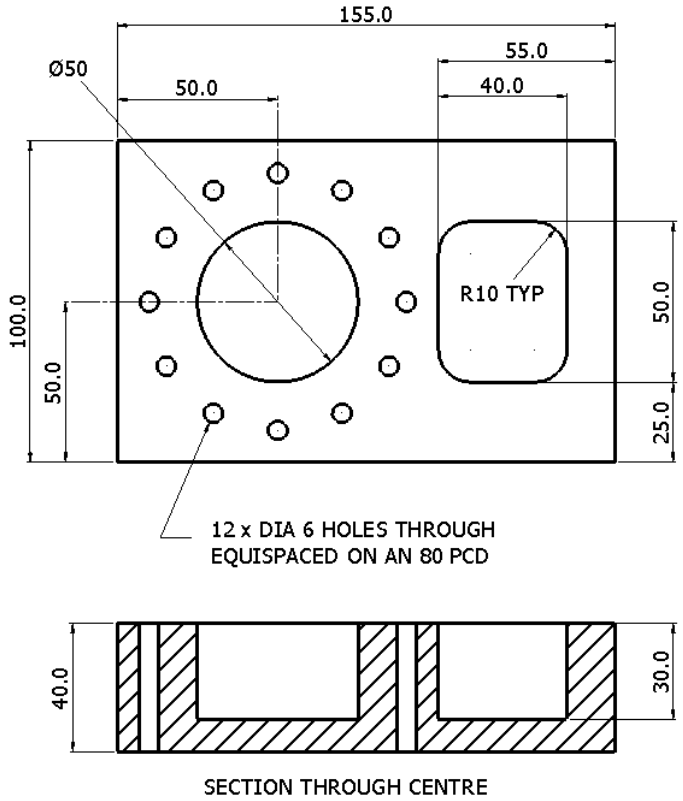

1 Select **File** - **Delete All** and **Tools** - **Reset Forms**.

2 In the **PowerMILL *explorer*** select **Workplanes** - **Create Workplane**.

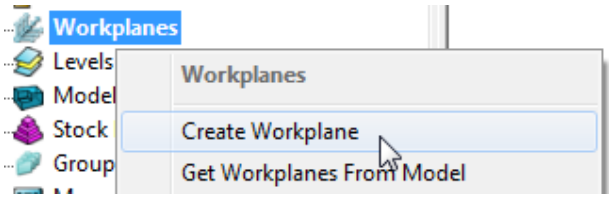

3 The **Workplane** editor toolbar will become active as soon as a new **workplane** is created on the global datum.

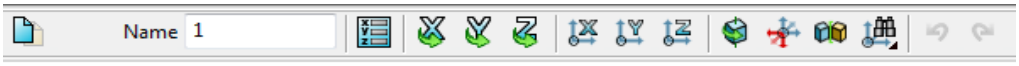

4 Select the ***green*** tick to exit the **Workplane Editor** toolbar.

5 **Activate** the **Workplane**.

6 Select a view down Z.

7 From the **PowerMILL *explorer***, right mouse click on **Patterns** and from the local menu select **Curve Editor**.

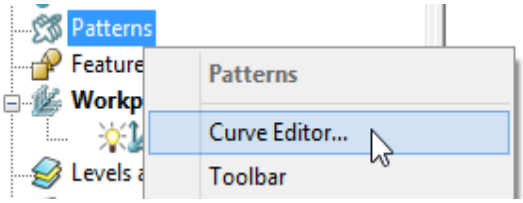

8 From the **Curve Editor** select **Rectangle** option.

9 Input **0** in the ***Command Input*** box (located to the right and below the graphics area) and press the return key to accept.

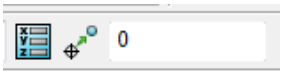

This will fix the corner of the **Rectangle of Lines** to the active XYZ datum.

10 Input **155 100** in the **Command Input** box and press the return key to accept the X and Y dimensions of the rectangle.

11 Select the corner **Radius** option and input **10**.

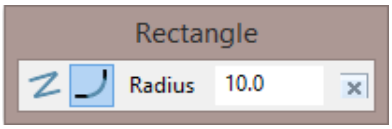

 Copyright © Delcam Ltd

12 Create a new **Rectangle of lines** using **100 25** to define the start corner.

13 In the data input box, switch from **Absolute** to **Relative** input and enter **40 50** for the X and Y dimensions.

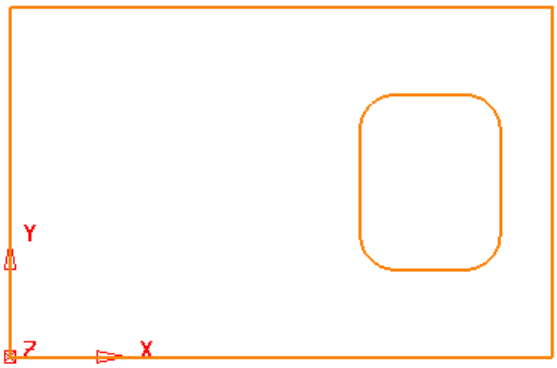

14 From the **Create a circle** options select the **full Circle** option.

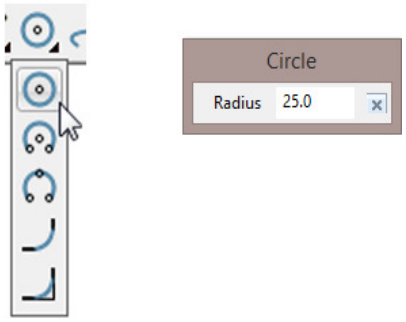

15 Input a **Radius** value of **25**.

16 Input **50 50** in the **Command Input** box followed by the return key.

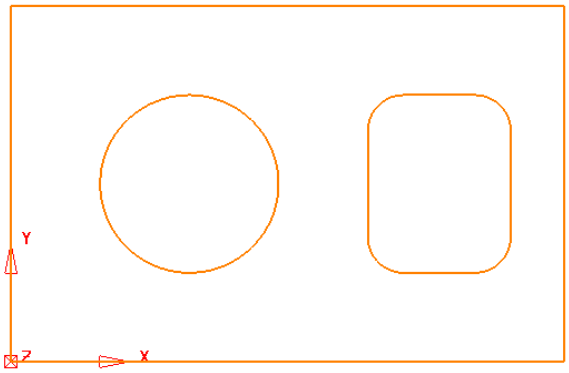

17 Create another **Circle** with a centre at **50 90** and a radius value of **3**.

18 Click on to close the **Circle creation** options.

19 Select the Dia 6 **Circle**.

20 With the new Dia 6 **Circle** selected, open the **Transforms** options and select **Create pattern of objects** .

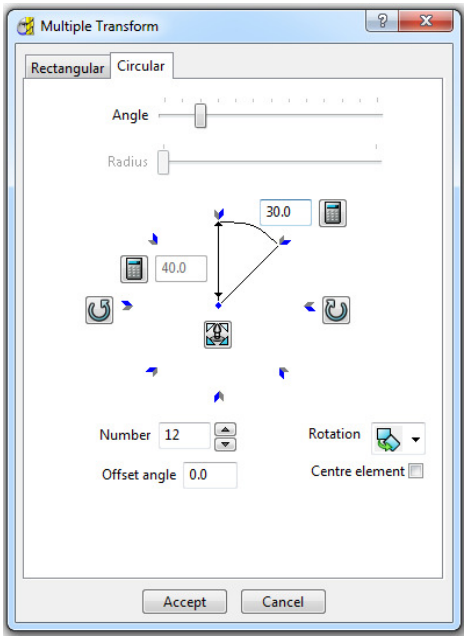

21 On the dialog, select the **Circular** tab and enter **Angle 30**, **Number 12** and select **Reposition rotation axis** , and drag it to the centre of the large circle.

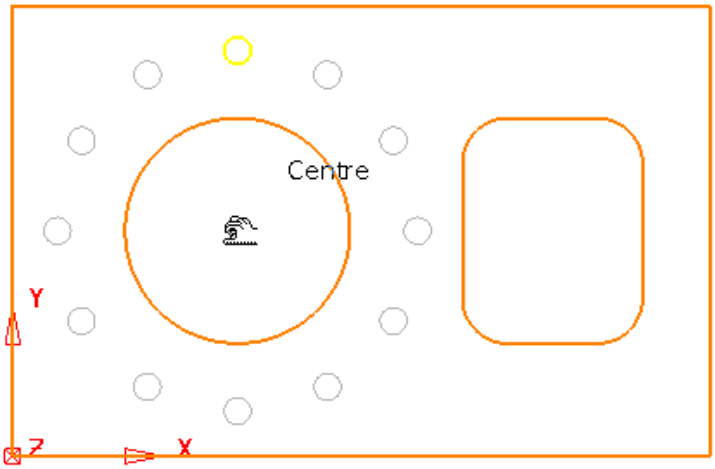

22 Select **Accept** on the **Multiple Transform** dialog.

Copyright © Delcam Ltd

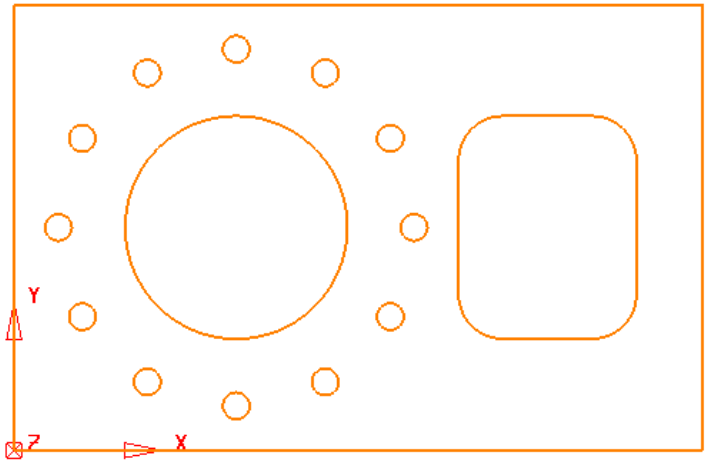

The geometry creation is now complete and is ready to be returned to the **PowerMILL Project** as the contents of the **Pattern**.

23 Left click in the graphics area away from the segments to deselect them.

If any segments are selected then the remainder will no longer exist on return to the main PowerMILL window.

24 Select to accept changes and export the wireframe back to **PowerMILL** to replace the original boundary.

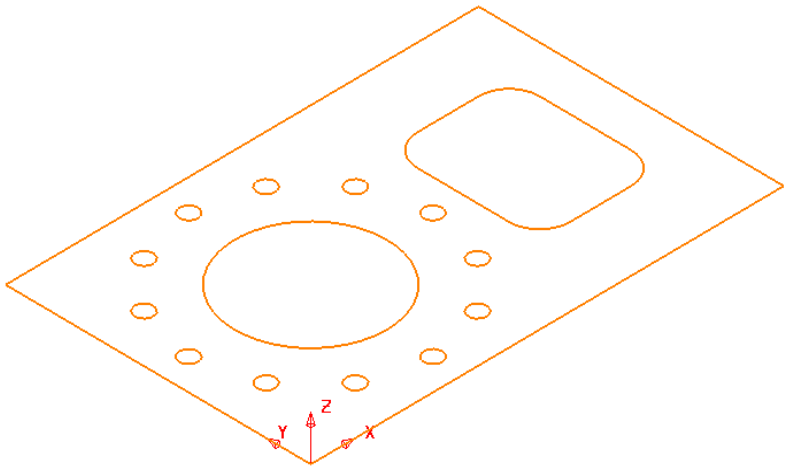

25 Select **File** > **Save Project As**:

.....\COURSEWORK\PowerMILL-Projects\2DModel

Boundary modifications using the Curve Editor

A **Shallow Boundary** will be created in the following example and although correct to the settings applied, it will benefit from further modification to provide improved machining strategies. The modifications aim to make the toolpaths, continuously follow the lower, component contour by bridging the gap between the 2 outer segments as well as smoothing any jagged sections of the segments. The easiest and most effective method is to make use the **Curve Editor**.

1 Select **File - Delete All** and **Tools - Reset Forms**.

2 **Import** the **Model**:

.....\PowerMILL_Data\models\cowling.dgk

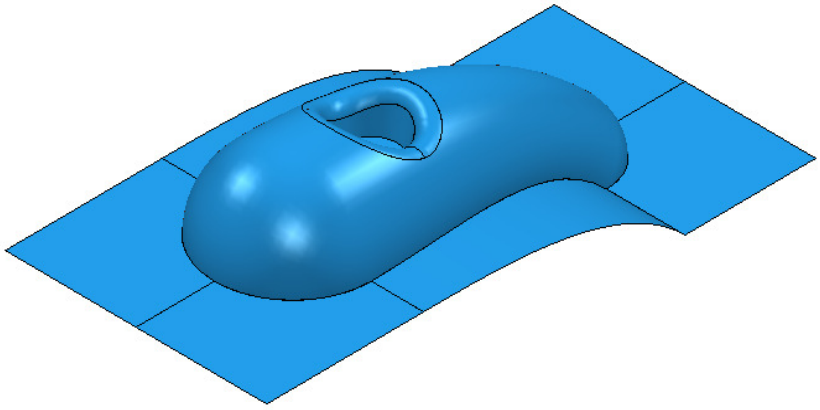

3 **Calculate** a **Block** using ***Defined by*** **- Box** and ***Type*** **Model**.

4 Create a Ball Nose cutter of Diameter 10mm named **BN10**.

5 **Calculate** the **Rapid Move Heights** using the default settings.

6 Use the default **Start and End Point** values.

7 In the **PowerMILL** ***explorer***, right-click **Boundaries** and from the local menu select **Create Boundary > Shallow**

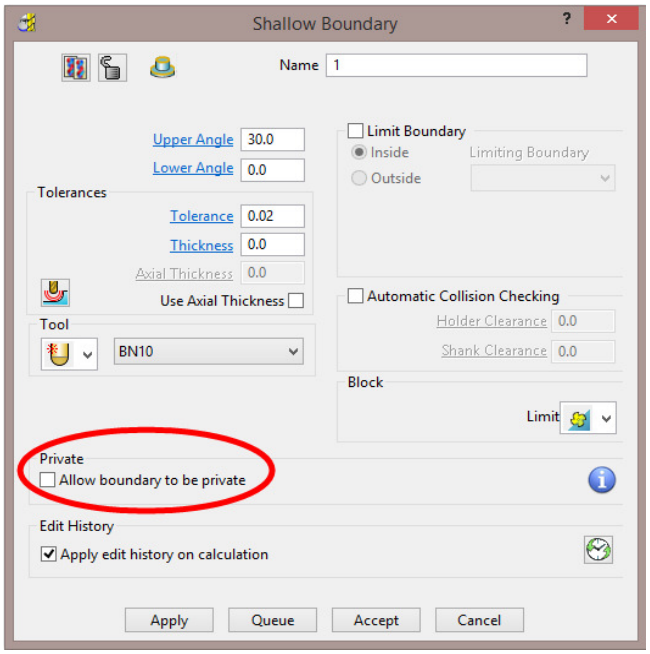

8 Input ***Tolerance*** **0.02**

 Copyright © Delcam Ltd

9 Set **limit tool centre to block edge**. 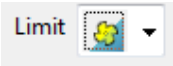

10 Un-tick **Allow boundary to be private**.

11 Select **Apply** followed by **Accept**.

12 Undraw the **model** to view the new **Boundary**.

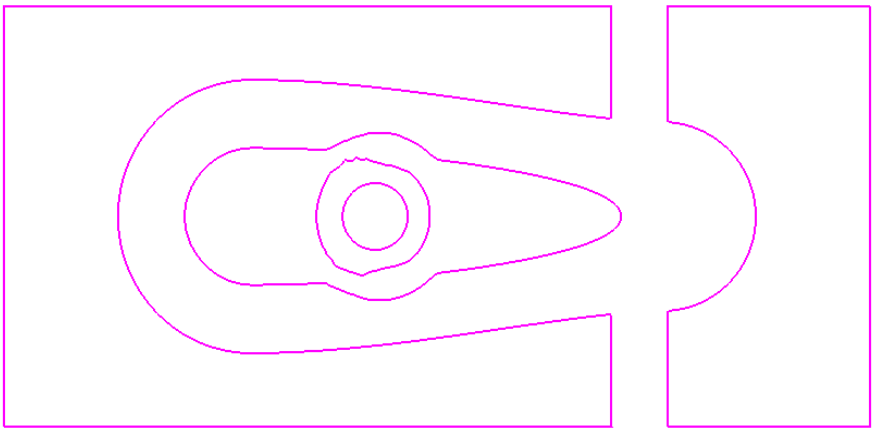

The **Boundary** will be modified so that the gap is removed between the 2 outer, closed, segments to form separate inner and outer segments. In addition to this, two of the other segments, which contain jagged sections, will be smoothed.

13 Right-click **Boundary 1** in the **PowerMILL *explorer*** and from the menu options select **Curve Editor**.

The **Curve Editor** toolbar will appear above the graphics area.

Some licensed icons are temporarily greyed out, only becoming available when a related entity is selected.

14 Select a **view down Z** for a top view of the inserted boundary.

15 Click **Line** from the toolbar then select **Create a single line**.

*Note: It is essential that the **Intelligent Cursor is active** (ticked):-*

If not, this is set in the **Curve Editor** > **Options** menu:-

-- **Intelligent Cursor** -- **Snapping Options** -- (Tick all boxes).

16 Using the left mouse button, snap (**Key points**) to create single lines across the ends of the four gaps, as shown in the image below.

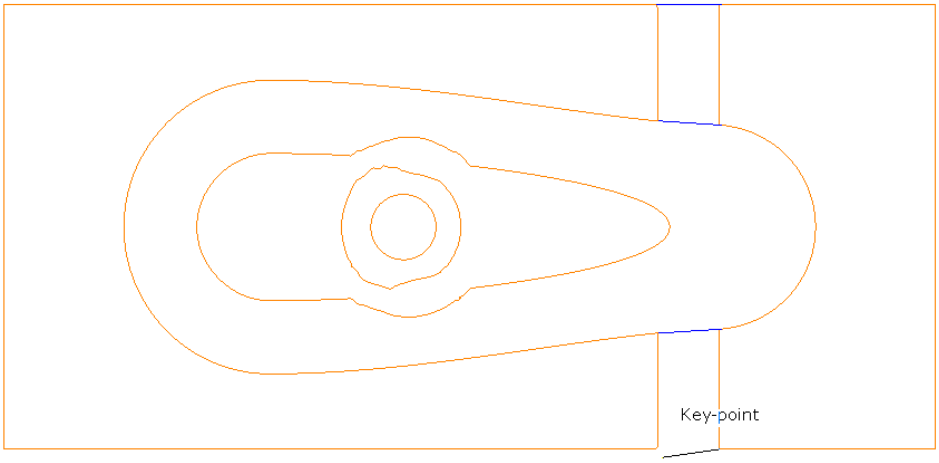

17 Select the **Single Line** option to switch it off.

18 To remove redundant spans on the curves, click the **Limits** option to access **Interactively limit wireframes**.

19 Click **Interactively limit wireframes** and using the left mouse button, select the parts of the curve (arrowed) to be removed.

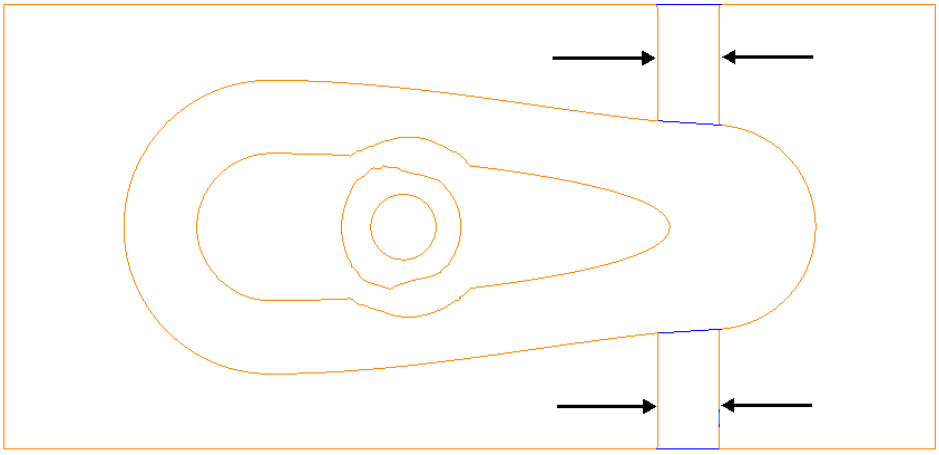

20 Select the **Interactively limit wireframes** option again to switch it off.

21 ***Zoom*** into the middle of the area covered by the 3 inner segments.

Note the jagged effect along these curves.

 Copyright © Delcam Ltd

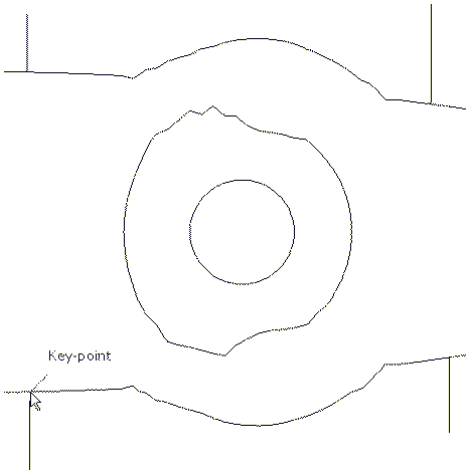

22 Create 4 **single lines**, snapped to key points and pointing outwards from the curve outside the jagged regions (as shown above).

These will be used as markers to provide a start and end point for new, replacement smoothed curves along the jagged sections. The markers will then be used as the limit to trim away the unwanted, jagged sections of the original curve.

23 Click **Curve** on the **toolbar** then select **Create a Bezier Curve** from the **Curve** toolbar.

24 For the upper section, generate a new, smoother, **curve** by snapping strategically placed key points within this region, starting and ending by snapping to the ends (**Key Point**) of the marker lines.

The selection of suitable key points requires a certain amount of skill on the part of the user. Where it is required to follow the original form closely input several, equispaced points. Where the original shape needs to be smoothed out input the minimum of equispaced points along the form.

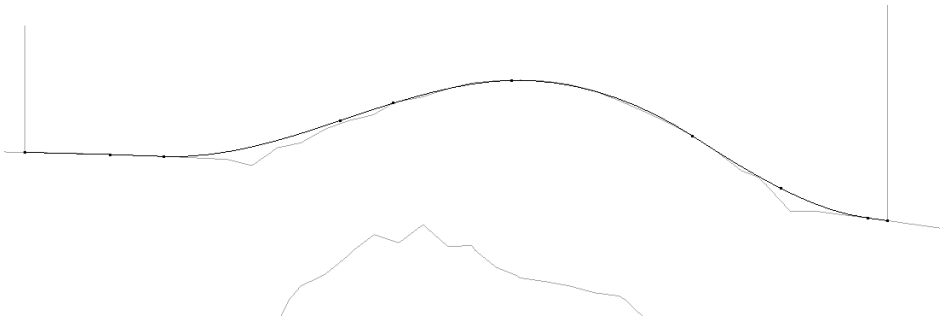

25 Repeat this process for the lower section.

26 Select the upper, original curve and select the **Cut Item** option.

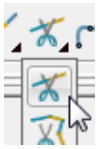

27 Click the **key points** at the lower end of each line to cut the original curve.

28 Repeat the above process on the lower, original curve then select and **Delete** all the unwanted segments between the 2 pairs of **lines**.

29 Then, select and **Delete** the 4 vertical lines.

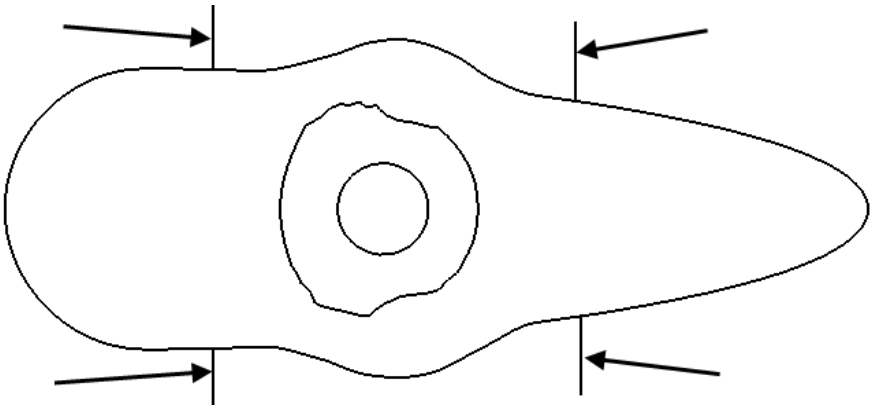

30 Create a new smooth **Bezier Curve** to replace the one indicated below.

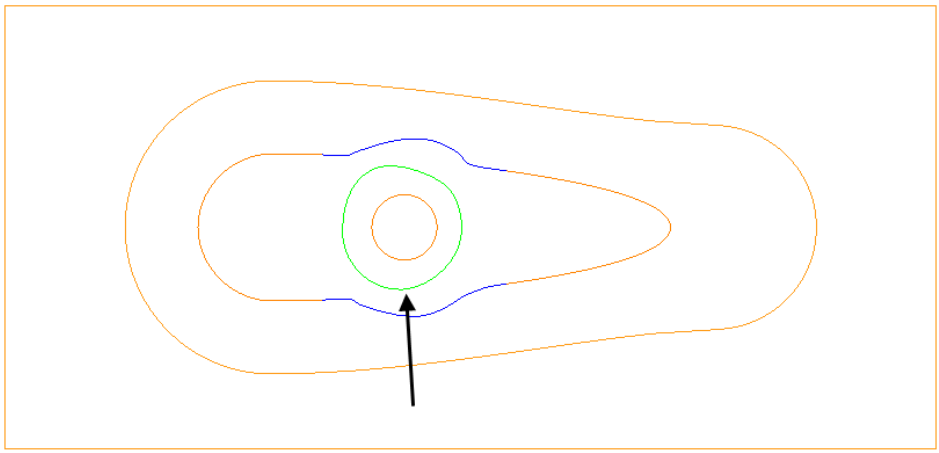

*The **Curves** used in the above wireframes will consist of open or closed segments, but if they are to be used to recreate a **boundary** they must form single entity, closed loops. Only closed forms will appear as **boundary** segments when returned to **PowerMILL**.*

31 Select all **boundary** segments by dragging a box over them with the left hand mouse key depressed.

 Copyright © Delcam Ltd

32 Select the option **Merge** selected segments to join together all groups of **curves** that butt up to each other.

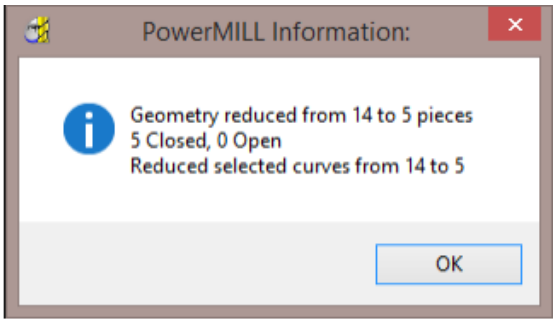

*The wireframe will now consist of five single segments as reported in the **PowerMILL Information box** (above right).*

33 Left click in the graphics area away from the segments to deselect them.

*If any segments are selected then the remainder will no longer exist on return to the main **PowerMILL** window.*

34 Select to **Accept** changes and export the wireframe back to **PowerMILL** to replace the original boundary.

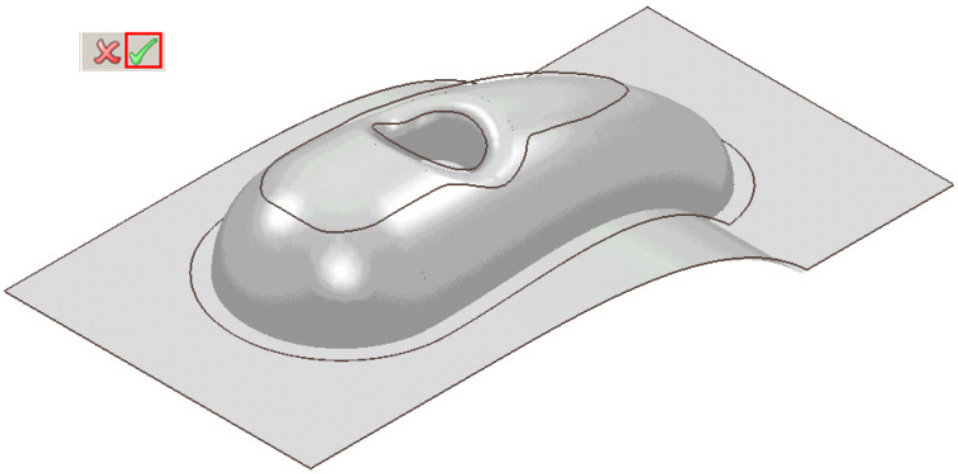

The modified **Boundary** is positioned back over the model close to its original 3D form. The new smoothed contours are now a more suitable shape for use in the **3D Offset Finishing** strategy.

35 Generate a **Constant Z Finishing** toolpath with **Stepdown** 1 and in the **Limit** page set the **Boundary** - **Trimming** option to **Keep outside** (Steep areas).

36 Generate a **3D Offset Finishing** toolpath with **Stepover** 1 and in the **Limit** page set the **Boundary** - **Trimming** option to **Keep inside** (Shallow areas).

37 Select **File** > **Save Project As**:

.....\COURSEWORK\PowerMILL-Projects\Boundary-mod

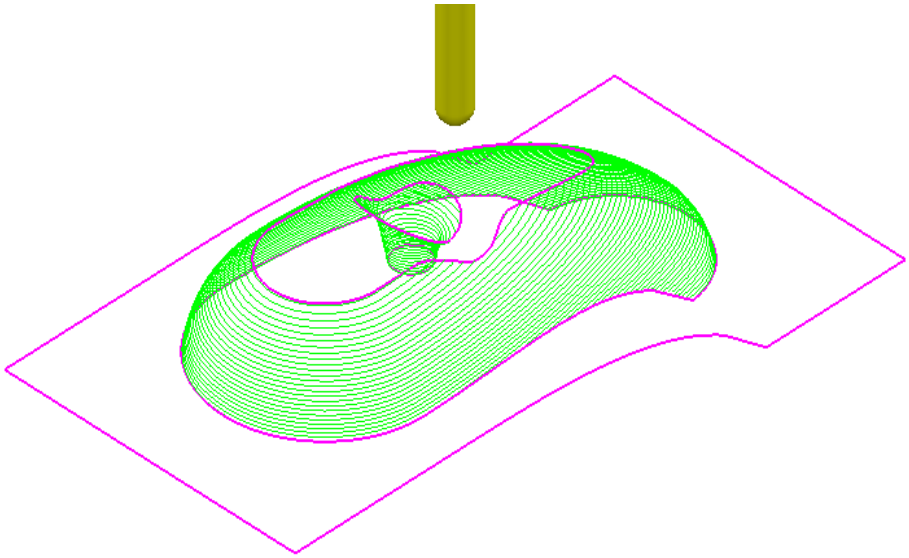

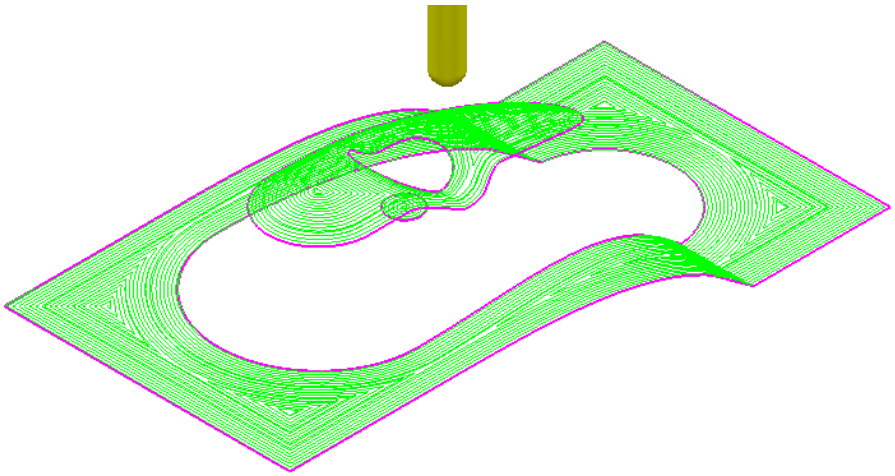

These are the resultant toolpaths with the **Leads** and **Links** undrawn.

*The techniques used in this example can equally be applied to **Patterns**, which also have the added advantage on being able to exist both as open or closed segments (**Boundaries** cannot contain open segments).*

*The same **Curve Editor** toolbar is accessed via the local **Pattern** menu.*

 Copyright © Delcam Ltd

12. 2D Machining

Introduction

PowerMILL offers a range of 2D machining strategies that include ***2.5D* Feature** machining (including **Drilling)**, ***2D* Curve** machining (including **Chamfer** Milling), and **Face Milling**.

Feature Machining

Features are wireframe entities that are extruded along Z. During creation they are specifically defined as a **Pocket**, **Slot**, **Boss,** Hole, **Circular pocket**, or **Circular boss**. It is also possible to extract **Hole** features directly from the 3D model. **Hole Features** can also be created during **3D Area Clearance** strategies to enable the pre-drilling of plunge move, positions. It is essential that a **Feature Set** includes all **Features** that need to work together to create a **2.5D Feature** machining strategy.

On completion of a **Feature Set**, the 4 **Feature Set** options in the **2.5D Area Clearance** strategies will create roughing, semi finishing, and finishing strategies.

Drilling strategies can only be applied to **Hole Features**. A comprehensive, list of cycle types are supported that include; Standard Drilling, Boring, Helical/Profile milling, Tapping, and Thread Milling.

The six different types of **Feature** include:-

- **Pocket**:- Machining will only occur fully inside this type of closed **Feature**.
- **Slot**:- Machining will occur with the tool running central, left, or right of this type of open/closed **Feature**.
- **Boss**:- Machining will only occur fully outside this type of closed **Feature**.
- **Hole**, this type of **Feature** is specifically used by the **Drilling** strategies.
- **Circular Pocket** - a circular pocket is defined from points, circles or curves.
- **Circular Boss** - a circular boss is defined from points, circles or curves.

*It is not possible to change an existing a **Feature** to one of a different type.*

Creating Features from Pattern segments

1 Select **File > Delete All** and **Tools > Reset Forms**.

2 **Open** the Read-Only **Project**:

.....\PowerMILL_Data\Projects\2D-Drawing

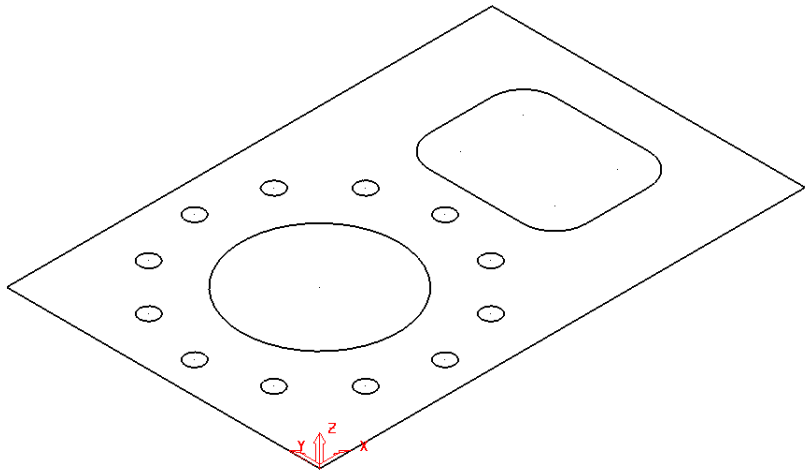

The imported **Project** contains a **Pattern** defining 2D geometry ready to be used to create a **Feature Set**.

3 Select **File > Save Project As**:

.....\COURSEWORK\PowerMILL-Projects\2DPatternExample

4 In the **PowerMILL *explorer***, right-click on **Feature Sets** and from the local menu, select **Create Features**.

The **Feature** dialogue will appear in the graphics area.

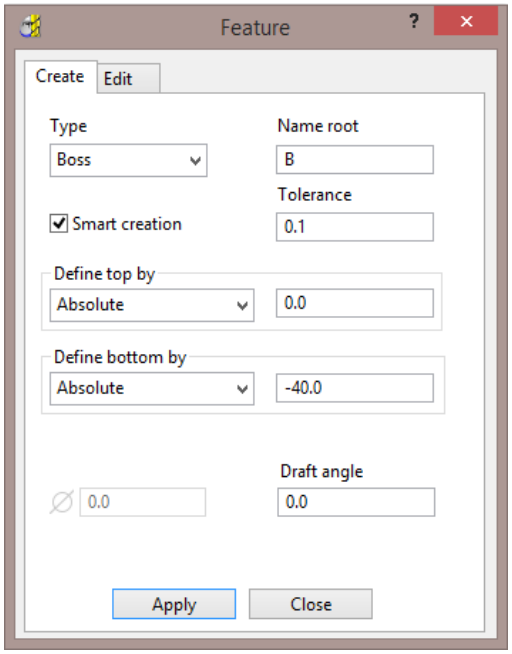

5 Select the large, outer, rectangular **Pattern *segment*** and enter values exactly as shown (using ***Type* Boss**) in the above **Feature** dialog before clicking **Apply** (Do not close the dialog).

 Copyright © Delcam Ltd

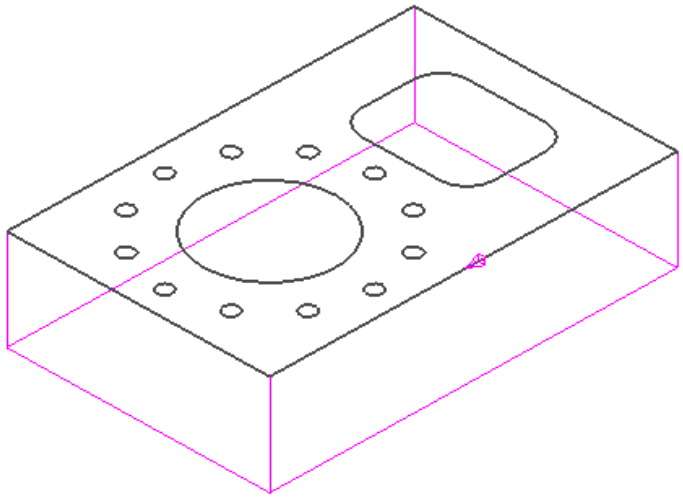

The first **Feature** is the outer component body defined as a **Boss** (as shown above).

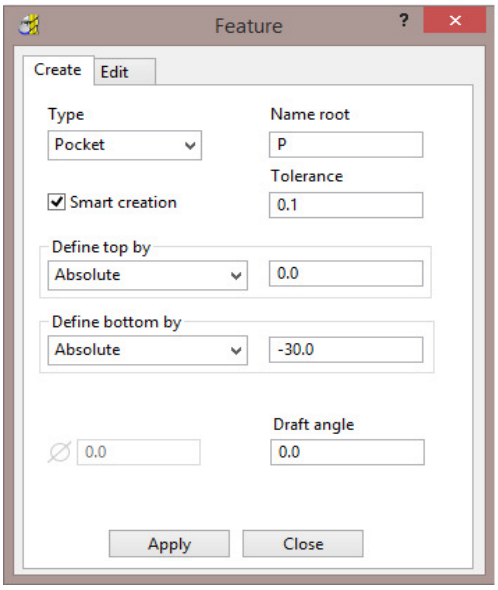

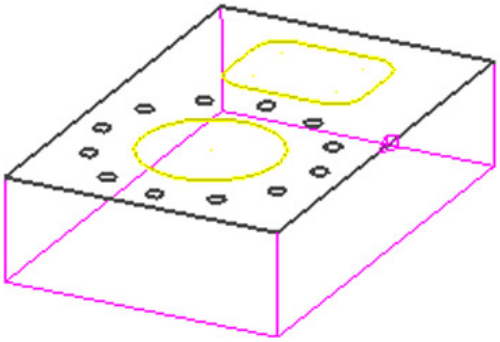

6 Select both, the ***rectangular segment*** (with corner fillets) and the large ***circular*** segment.

7 Enter values exactly as shown in the above **Feature** dialog (using ***Type*** **Pocket**) before selecting **Apply** (Do not close the form).

If you close the **Feature** *dialog it can be re-opened in the* ***PowerMILL explorer*** *by a right click on the* ***Feature*** *and then from the local menu select* ***Create Features****.*

8 Close the ***Feature*** creation dialog.

9 Right mouse click on the new **Feature Set** – **1** and from the local menu select **Create Holes**.

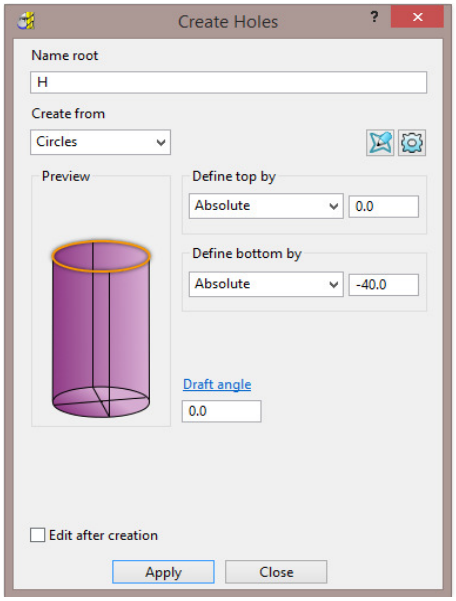

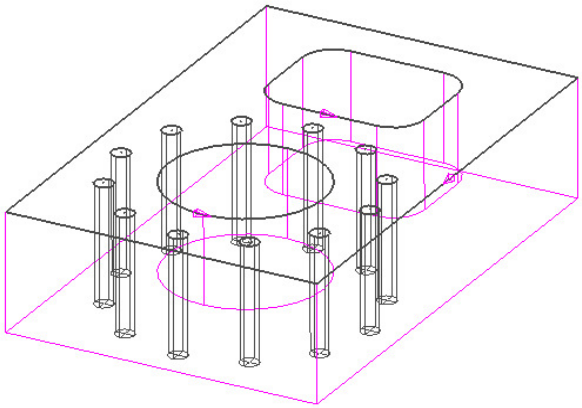

10 Select all of the Dia 6 **circles** (12) and enter values exactly as shown in the above left **Feature** dialog (using ***Type*** **Hole**) before selecting **Apply**.

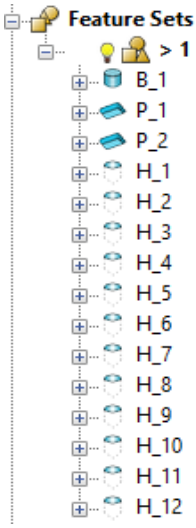

The contents of the **Feature Set** (**1**) should be similar to the above illustration (Note: A naming system has been deployed where a **Boss** is prefixed with a **B**, a **Pocket** with a **P**, and a **Hole** with an **H**).

11 Close the ***Hole*** creation dialog.

The **Feature Set** is now complete and ready for the creation of suitable ***2.5D machining*** and ***Drilling*** strategies.

2D Feature Set Machining

1 Define a Dia 10 - tiprad 1 - Length 50 tool named **D10TR1**.

2 Click to open the **Block** dialog, set the **Type** as **Feature** and the select **Calculate**.

3 Click to open the **Rapid Move Heights** dialog and select **Calculate**.

 Copyright © Delcam Ltd

4 Click to open the **Toolpath Strategies** dialog and select **2.5D Area Clearance**.

5 Select **Feature Set Area Clearance** and input the data exactly as shown in the following dialog.

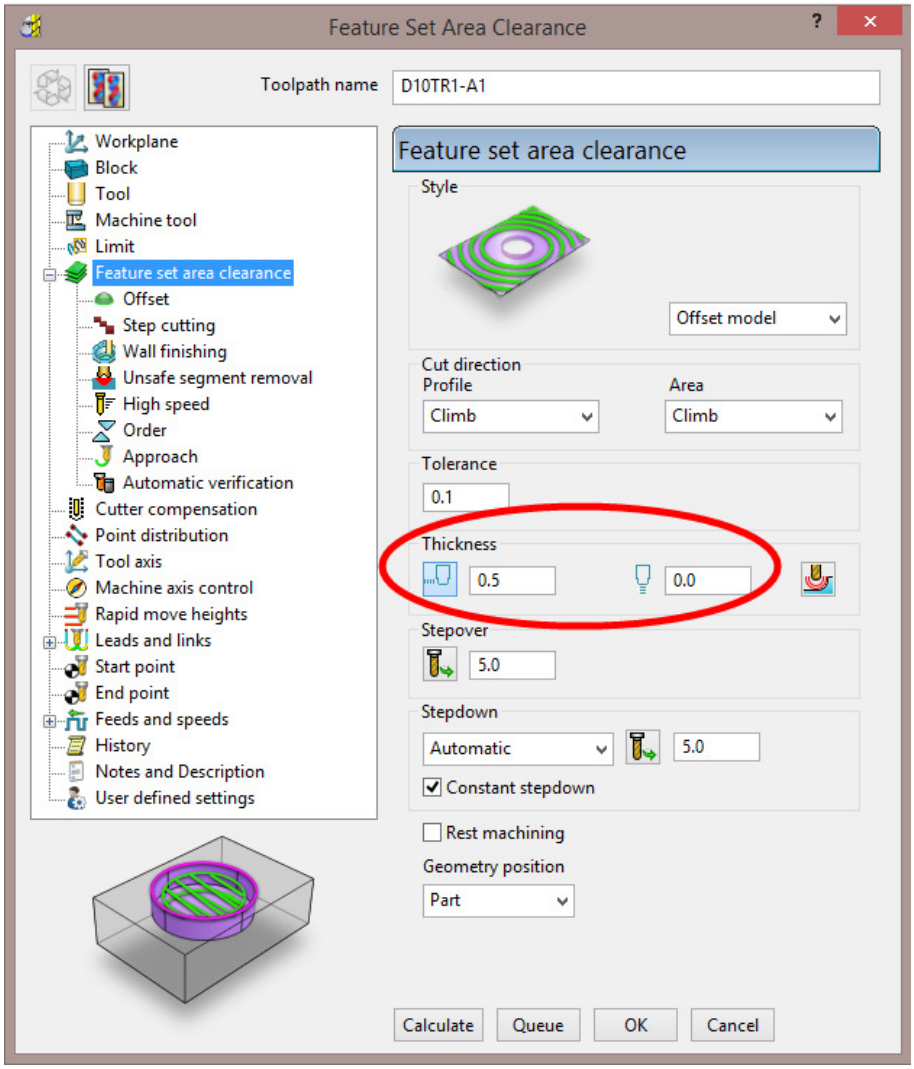

6 In the **Offset** page tick **Spiral**.

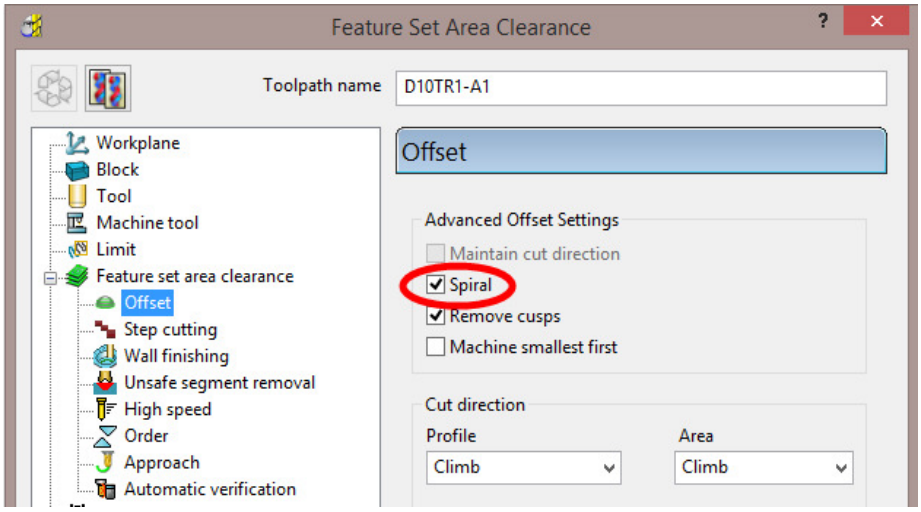

7 In the **Leads and Links** – **Lead in** page select:-

1st choice > **Ramp**

Ramp Options > ***Follow*** **Circle** – ***Circle diameter (TDU)*** **0.65**

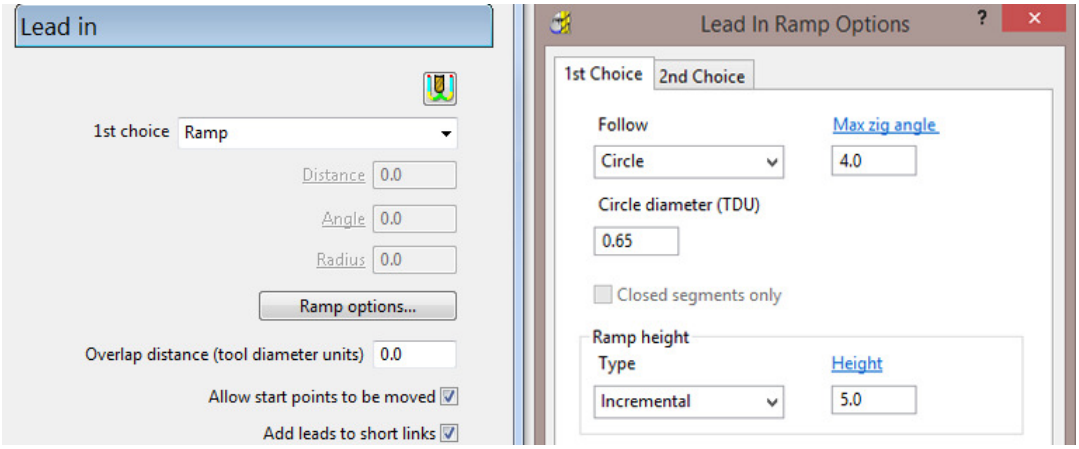

8 Select **Calculate** to process the toolpath and then select **Cancel** to close the dialog.

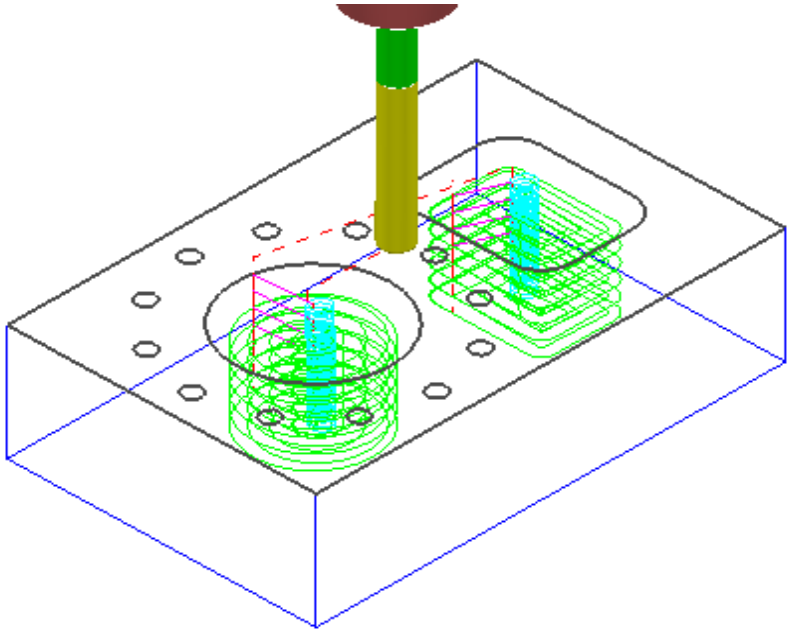

*The **Pocket Features** are machined with **0.5** stock left on the sidewalls and **0** stock on the base (Radial thickness 0.5 and Axial thickness 0).*

9 Click to open the **Toolpath Strategies** dialog and select **2.5D Area Clearance**.

10 Select **Feature Set Profile** and input data exactly as shown in the following dialog.

 Copyright © Delcam Ltd

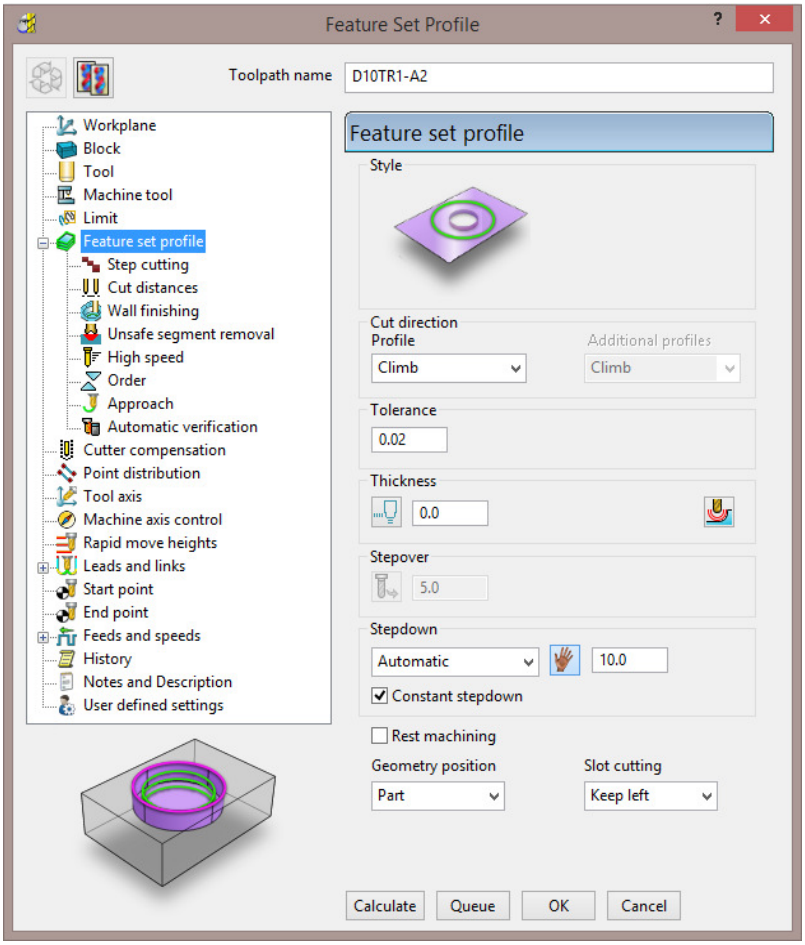

11 Select the **Lead In** page and for **1st Choice** select **Pocket Centre** and then select the ***Lead out same as lead in*** option .

12 Select **Calculate** to process the toolpath and then **Close** the dialog.

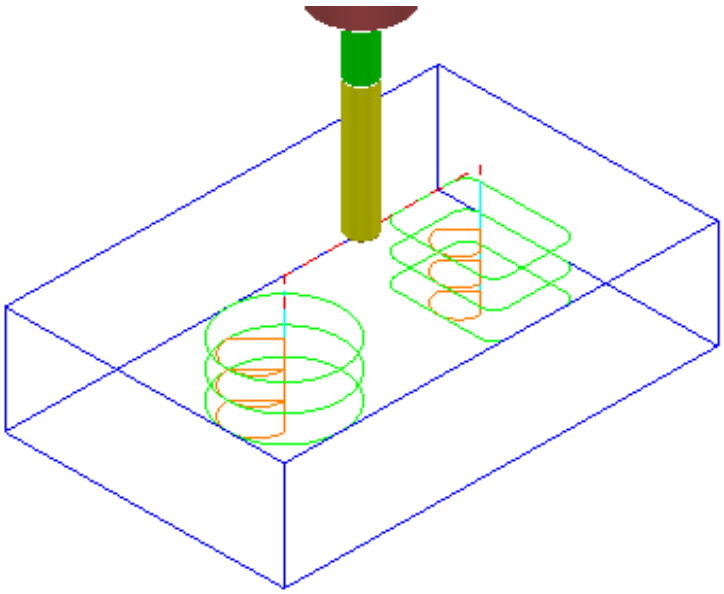

13 Create a Dia 3 **Drill** of Length 30, named **Drill3**.

14 Click to open the **Strategy selector** dialog and select the **Drilling** tab.

15 From the list, select **Single Peck** to open the **Drilling** dialog (below).

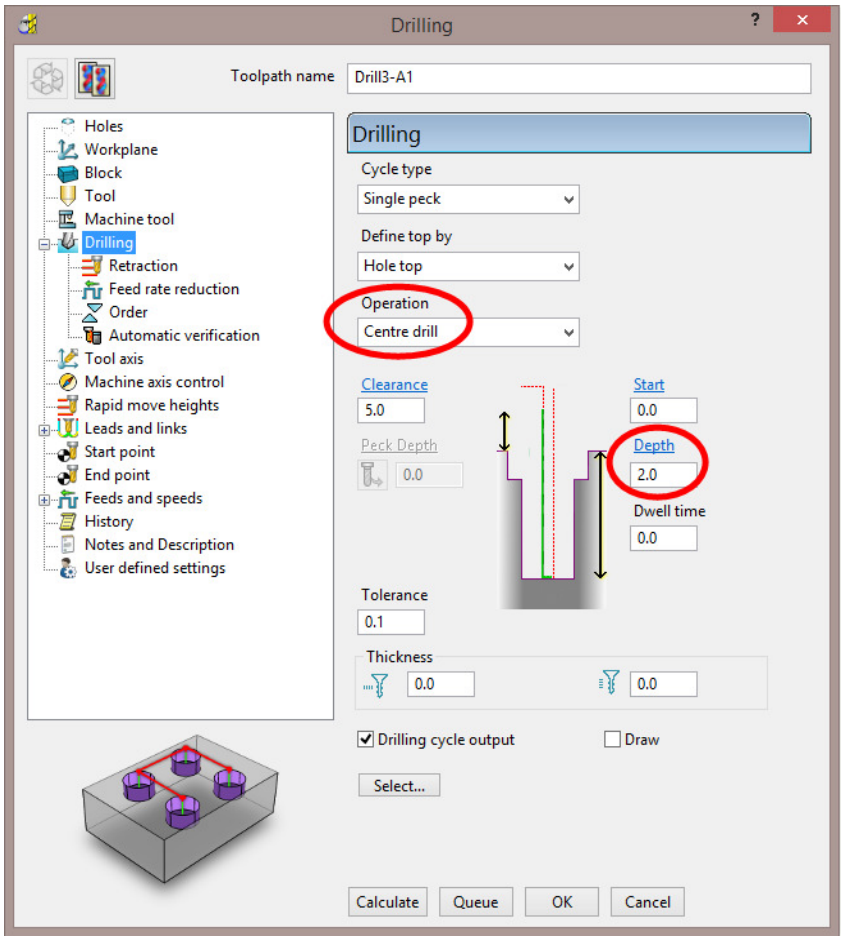

16 Select **Calculate** and all **Hole Features** will automatically be selected before the **Drilling** toolpath is processed.

17 Select **Cancel** to close the dialog.

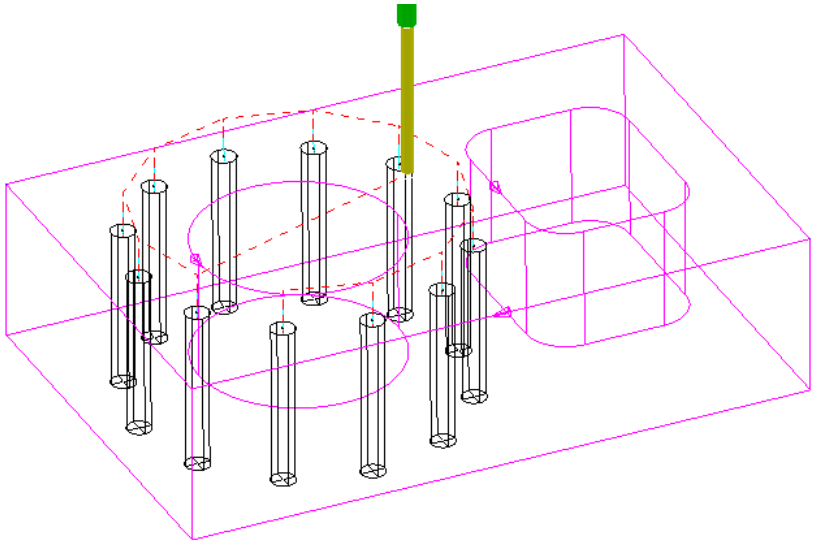

 Copyright © Delcam Ltd

18 Create a Dia 6 **Drill** of Length 50 and named **Drill6**.

19 Click to open the **Strategy selector** dialog and select the **Drilling** tab.

20 From the list, select **Break Chip** to open the **Drilling** dialog (below) and then click **Select** to open the **Feature Selection** dialog.

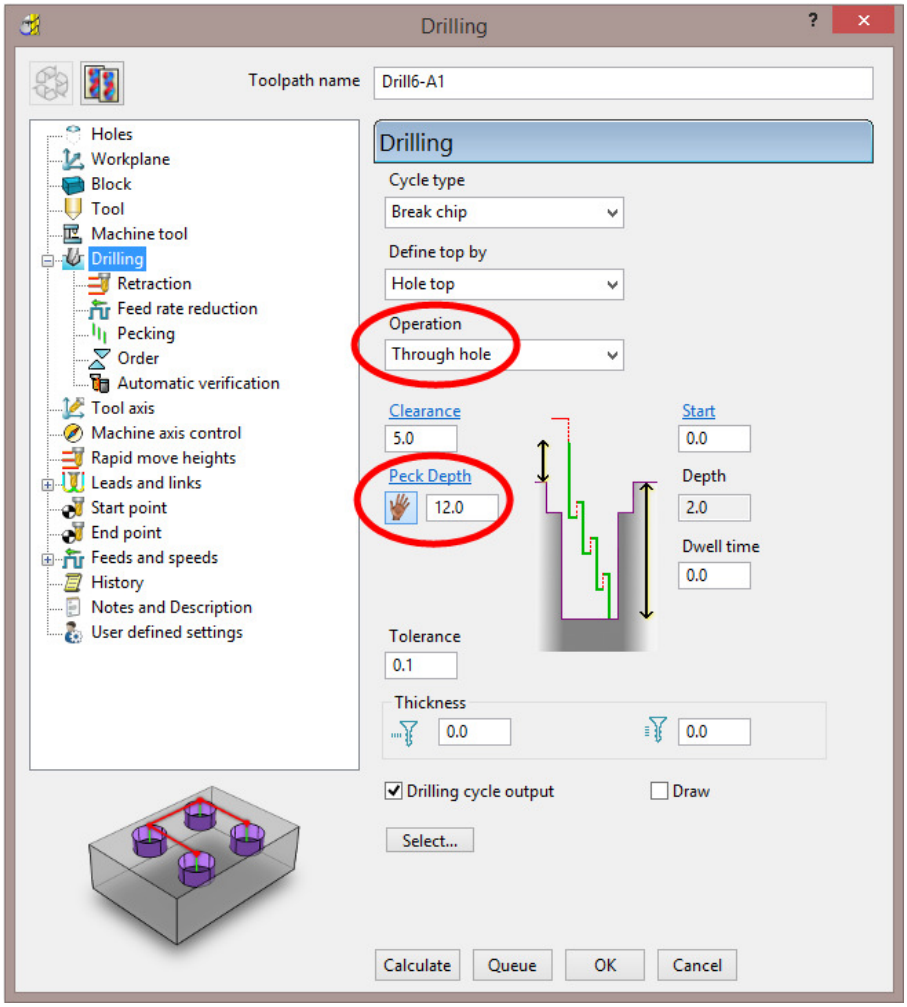

21 Select **Calculate** and all of the contained **Hole Features** will automatically be selected before the **Drilling** toolpath is processed.

22 Select **Cancel** to close the dialog.

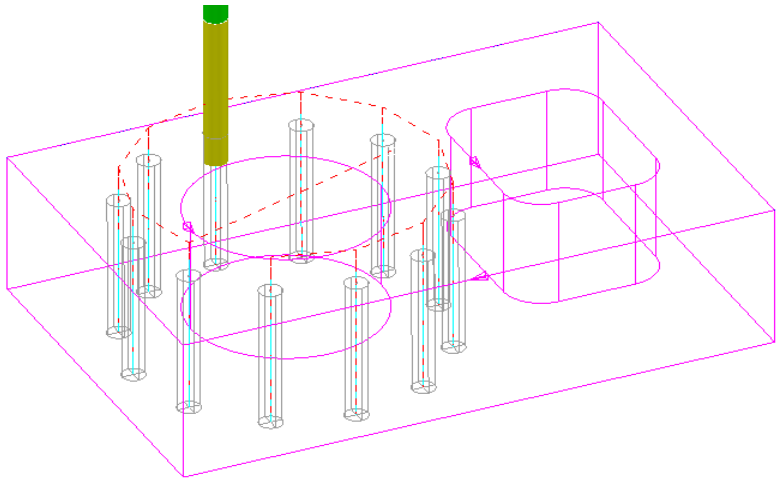

23 Run a full **ViewMILL** simulation on all 4 toolpaths.

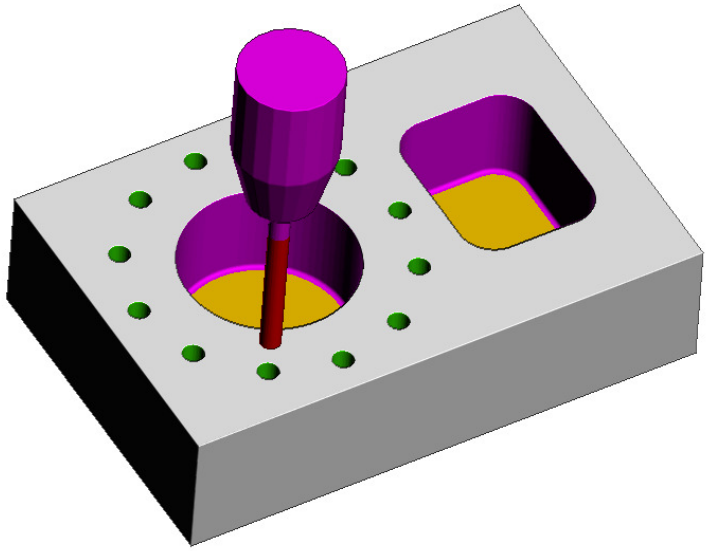

24 **Save** the **Project**.

2D Machining Exercise

For this exercise the following 2D drawing will be used along with the imported 2D wireframe **Pattern**:

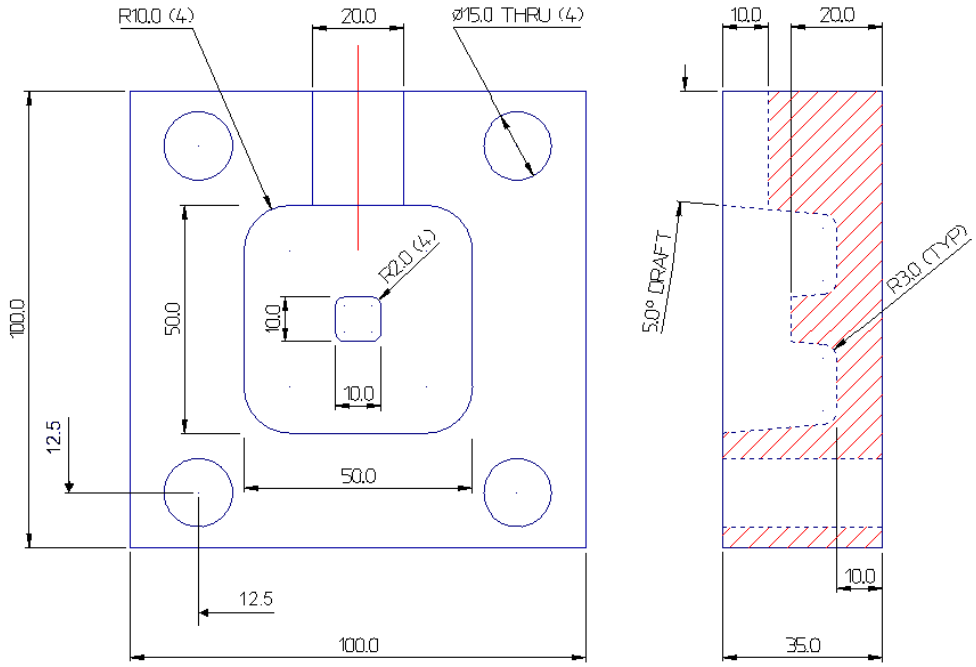

1 Select **File** > **Delete All** and **Tools** > **Reset Forms**

2 Create an empty **Pattern** and **Insert - File**:

.....\PowerMILL_Data\Models\2d_Wizard_Example.dgk

3 **Save Project As**:-

.....\COURSEWORK\PowerMILL_Projects\2D_Wizard_EX1

 Copyright © Delcam Ltd

4 Create a **Feature Set** (**1**) and create appropriate **Features** using the above drawing dimensions.

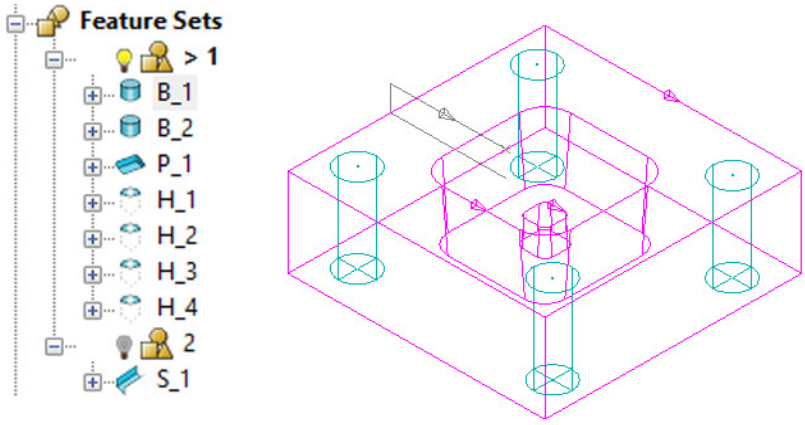

a The outer square and small tapered, central upstand are created as **Boss *Features***.

b The intermediate square is created as a tapered **Pocket *Feature***.

c The four Dia 15 circles are created as **Hole *Features***.

d The single red line on the drawing is used to define a **Slot *Feature*** (This should be created in a separate **Feature Set** (**1_1**)).

5 Create a Dia **10** with **3 Tip Radius** tool named **D10TR3** (Roughing, Semi-finishing within the main Pocket Feature including the small Boss).

6 Create a Dia **10 Tapered Tipped** tool named **D10TR3A5**, with Tip Radius **3**, Taper Angle **5** Deg, Length **25**, Taper Diameter **7.5** (Final Finishing of tapered walls Main Pocket and small Boss).

7 Create a **Shank** of Dia **10** - Length **30**.

8 Create 2 **Holder** with **Overhang 50** and entities:-

a Lower Dia **20** - Upper Dia **30** and length **25**.

b Upper/Lower Dia **30** and Length **25**.

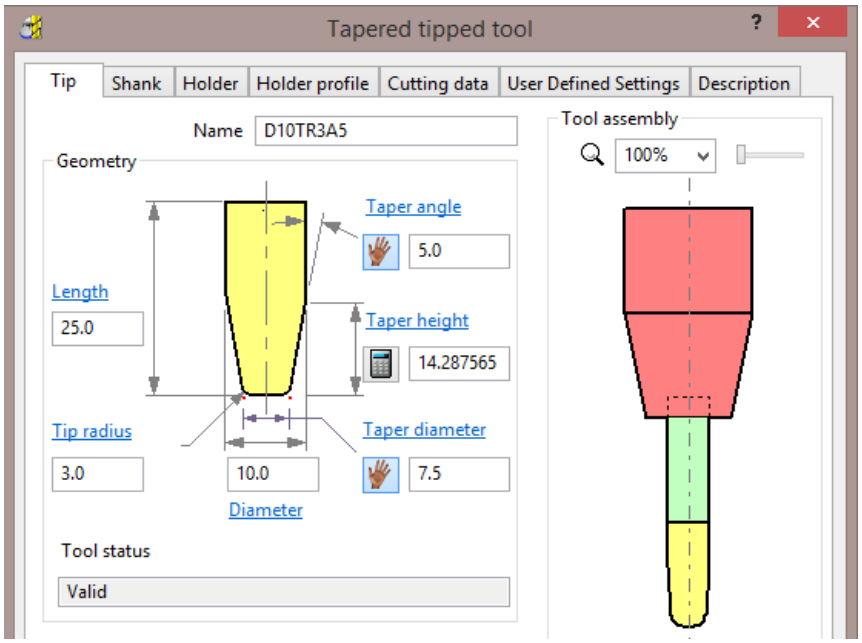

*To calculate the Taper Height based on the Taper Angle and base Taper Diameter, the Manual Input icon , adjacent to the Taper Height, is clicked to apply the **Calculate** option to this parameter.*

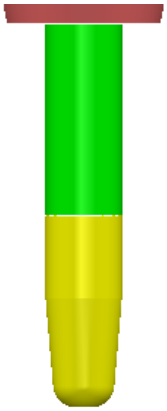

9 Create a Dia 15 **Drill** named **Drill15**.

10 Create an **End Mill** of Dia 10 named **EM10**.

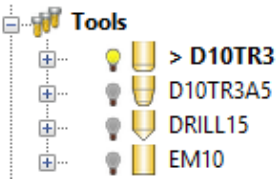

11 Activate the tool **D10TR3**.

12 Activate, **Feature Set 1** and create a **Block** (***Type* - Feature**).

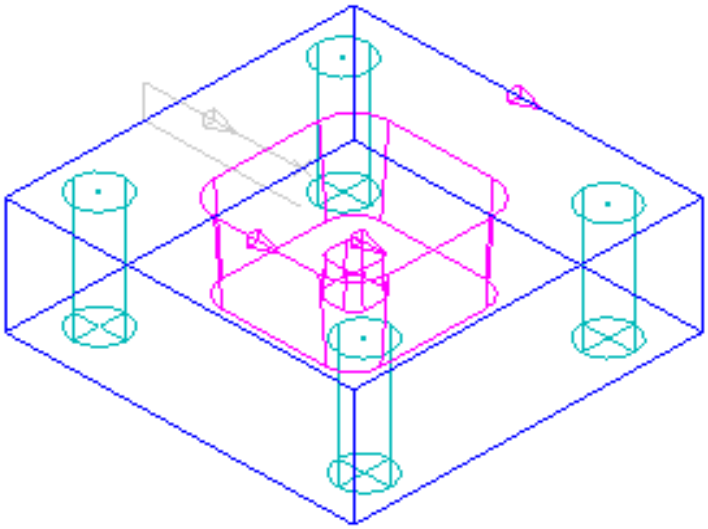

13 **Calculate** default **Rapid Move Heights** ready to create the 2D **Feature** machining strategies.

 Copyright © Delcam Ltd

Main Block and Central Pocket

D10TR3 - Feature Set Area Clearance – Offset Model

14 Click to open the **Toolpath Strategies** dialog and select **2.5D Area Clearance**.

15 Select **Feature Set Area Clearance** and input the data exactly as shown in the following dialog.

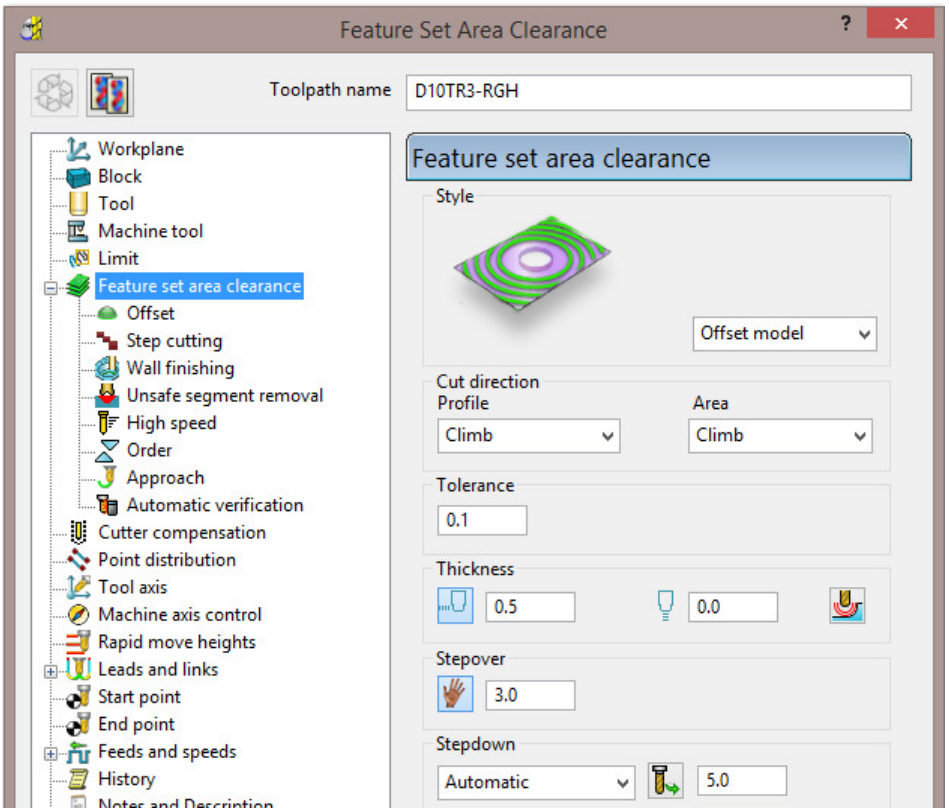

16 **Calculate** the toolpath and perform a **ViewMILL** simulation as shown below.

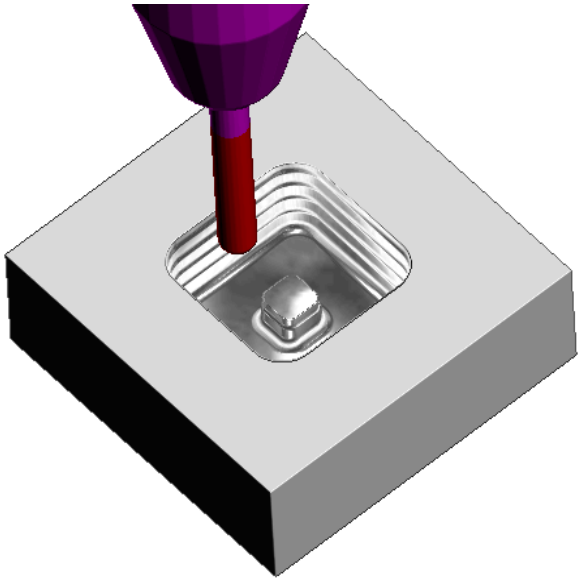

D10Tr3A5 - Feature set Profile

17 Click to open the **Toolpath Strategies** dialog and select **2.5D Area Clearance**.

Select **Feature Set Profile** and input the data exactly as shown in the following dialog.

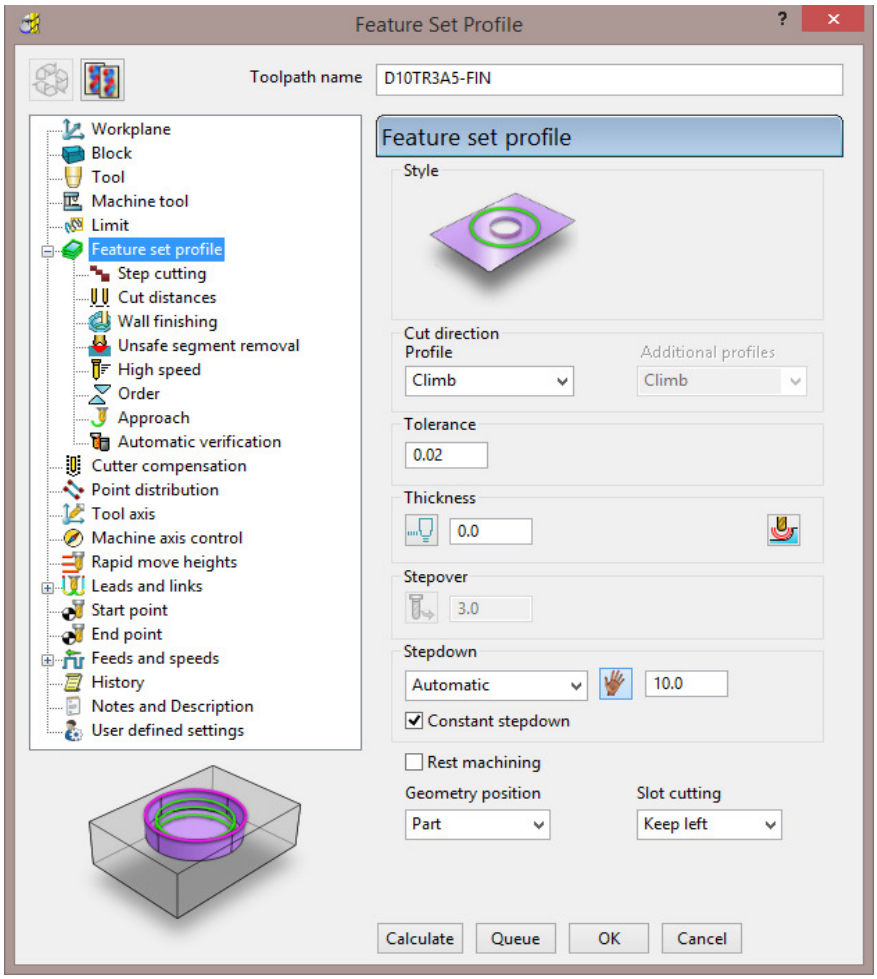

18 **Calculate** the toolpath and continue the **ViewMILL** simulation (as shown below).

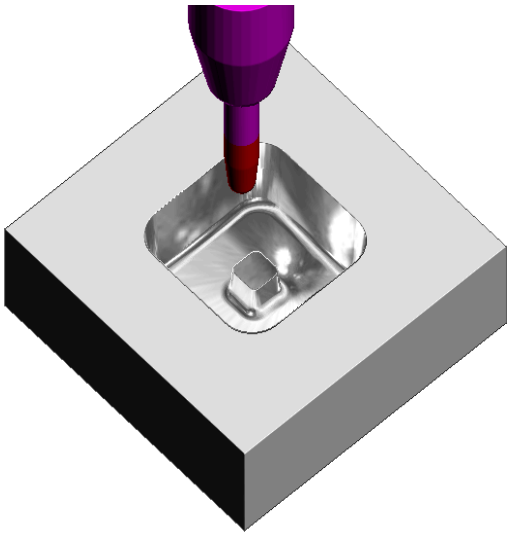

 Copyright © Delcam Ltd

Drill15 – Drilling

19 Click to open the **Toolpath Strategies** dialog and select **Drilling**.

20 Select **Deep Drill** and input the data exactly as shown in the following dialog.

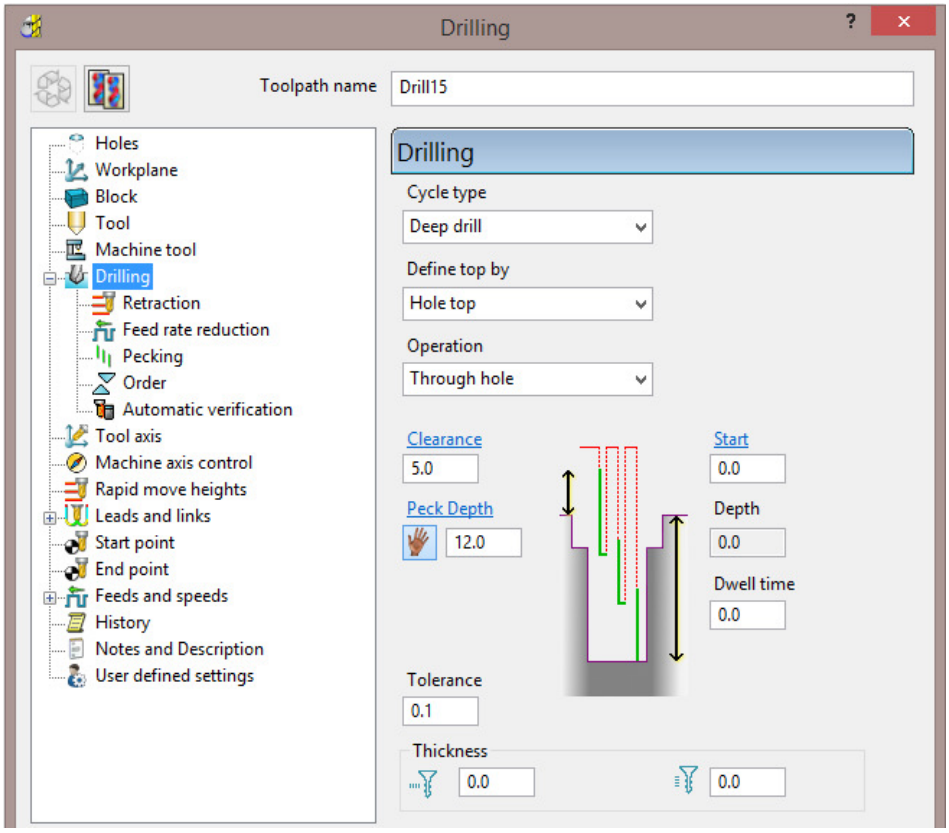

21 **Calculate** the toolpath and continue the **ViewMILL** simulation (as shown below).

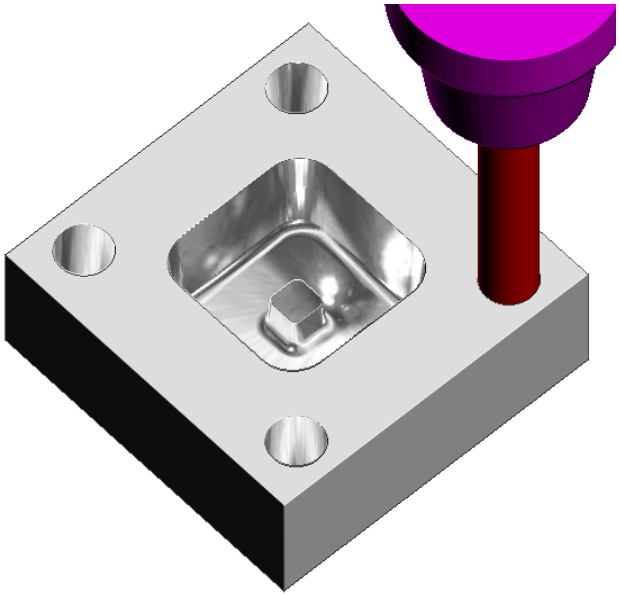

EM10 - Feature Set Profile

The Y dimension of the existing Block will need to be adjusted to fully, include the Slot Feature.

22 Open the **Block** dialog and input **60** for the **Max Y** value before selecting **Accept** (Do not select Calculate in the Block dialog).

23 Activate **Feature Set 2**.

24 Click to open the **Toolpath Strategies** dialog and select **2.5D Area Clearance**.

25 Select **Feature Set Profile** and input the data exactly as shown in the following dialog.

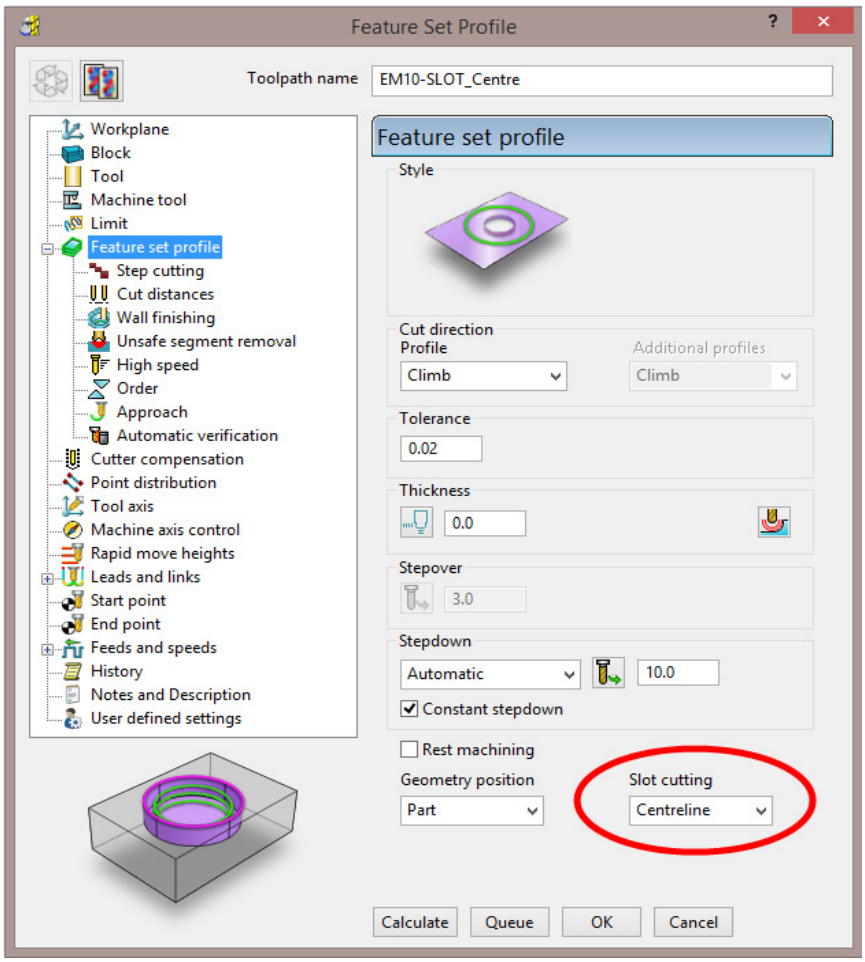

26 Select the ***Slot*** **Feature** only and then **Calculate** the toolpath.

27 Create 2 more copies of this strategy using ***Slot Cutting*** **Keep left** and **Keep right** respectively.

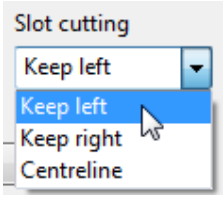

 Copyright © Delcam Ltd

28 Continue the **ViewMILL** simulation on the last 3 toolpaths (as shown below).

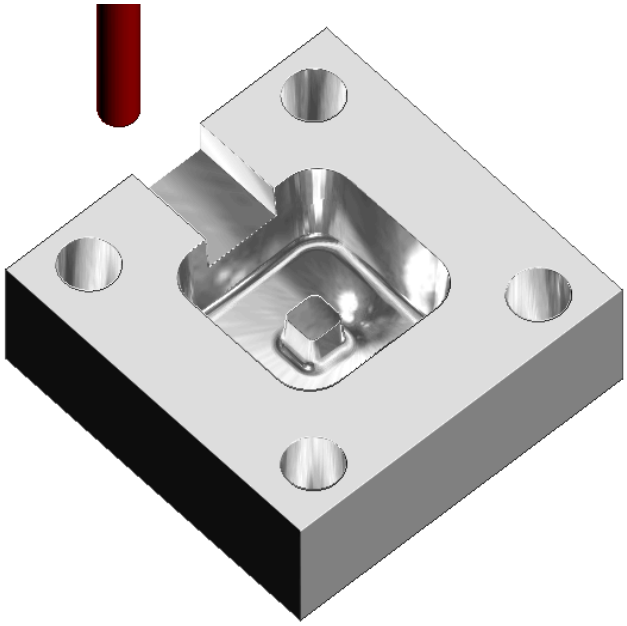

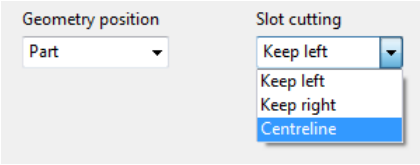

The required **Slot** width is achieved by creating 3 separate toolpaths using the 3 different **Slot cutting** options, starting with ***Centreline***, followed by ***Keep left***, and then ***Keep right***.

29 **Save** the **Project**.

Creating Features directly from holes in the Model

As well as being able to use imported **2D geometry**, **Hole Features** can be automatically defined from selected **Holes** in the **3D Surface** or **Solid model**.

1 Select **File** > **Delete All** and **Tools** > **Reset Forms**.

2 Select **File** > **Import Model**:

.....\PowerMILL_Data\Models\3Axis-Drilling

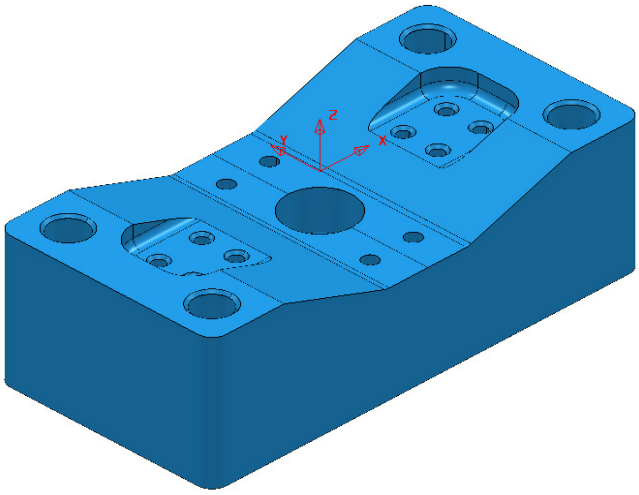

3 **Save Project As**:-

.....\COURSEWORK\PowerMILL-Projects\DrilledHoles-Example

4 Make sure the **Block** is not defined at this stage, as the top of the **Hole Features** will be created at the nearest Z dimension (Max or Min) of the **Block**. This is more than likely to result in some **holes** being created the wrong way up (It is however possible to reverse a **Hole Feature**).

5 **Activate** the ***Workplane*** **MC-datum**.

6 Select the whole **model**.

7 In the **PowerMILL *explorer***, right-click on **Feature Sets** and from the local menu select **Create holes**.

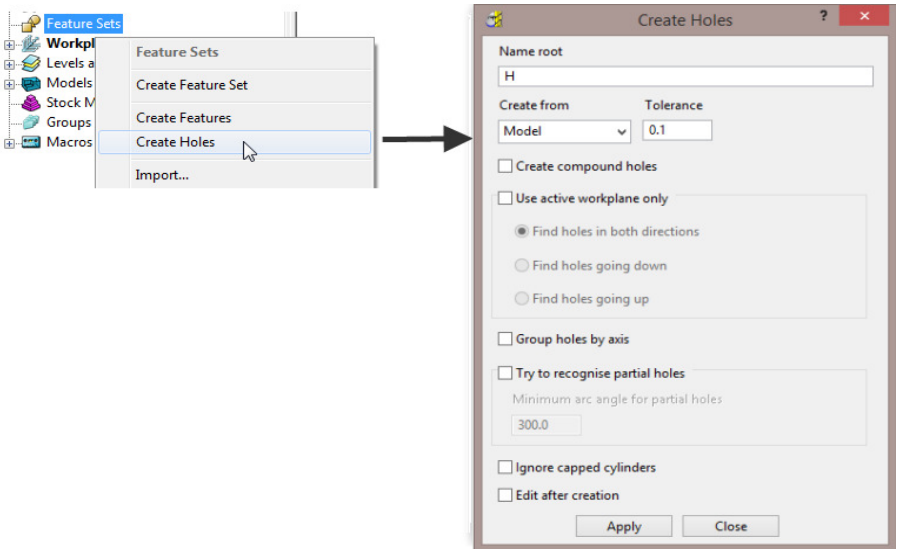

 Copyright © Delcam Ltd

8 Input data into the **Feature** dialog exactly as shown on previous page, and click **Apply**.

9 Undraw the **model**.

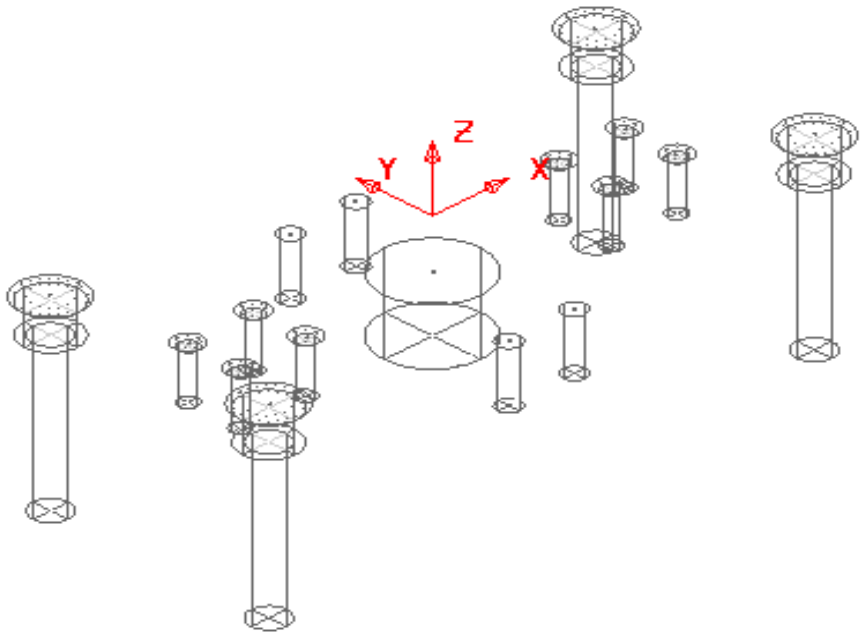

A **Hole Feature** is created for each of the 33 selected, ***Hole*** elements within the **model** (including the Chamfers and Counter-bores as separate **Features**).

EXERCISE

10 Define suitable tools, then **Drill** and **Counter Bore** the **Holes** using the **Drilling** dialog options.

11 **Save** the **Project**.

Hole Capping

Hole Features can be used as the basis for capping holes in the 3D **model**. If the intersection of the hole and the top face is non-planar, **PowerMILL** will cap the hole with a **surface** that follows the tangency of the surrounding 3D **model**.

Example

The following example illustrates the process of capping cylindrical **Hole Features** defined from a **3D model**.

1 Select **File > Delete All** and **Tools > Reset Forms**.

2 **Import** the **model**:

.....\PowerMILL_Data\Models\Block_with_holes.dgk

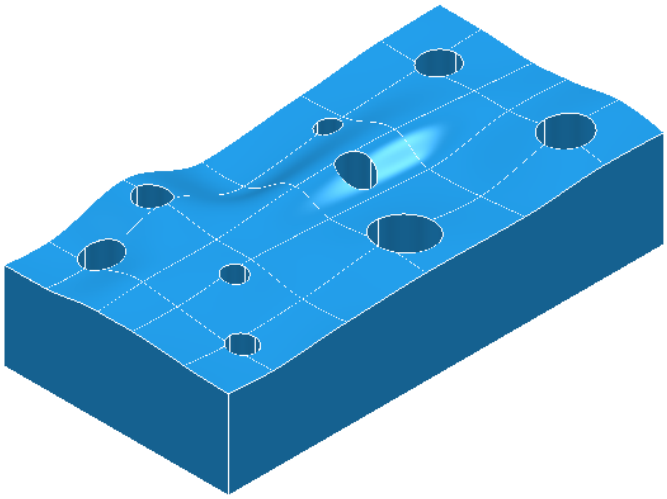

3 **Calculate** a **Block** using ***Defined by*** - **Box** and ***Type*** - **Model** (In this case the **Hole Features** will be created upside down).

4 Select the whole **model** by dragging a box over it while the left mouse button is depressed.

5 Right mouse click on **Feature Sets** and from the local menu select **Create Holes**.

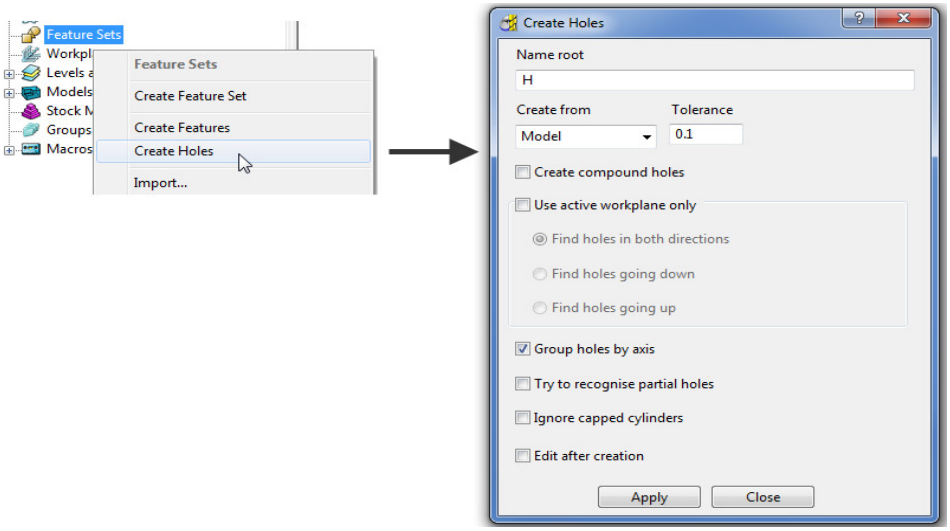

6 In the **Feature** dialogue enter ***Name root*** **H** and select **Apply**.

 Copyright © Delcam Ltd

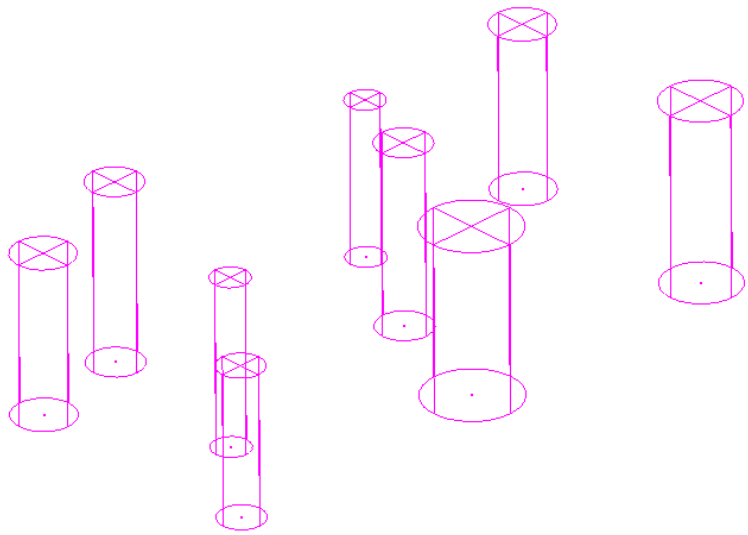

In this case the tops of the **Hole Features** are positioned at the shortest distance from the face of the **Block**. This results in all of the **Hole Features** being created upside down.

*If the **Block** had not been defined prior to this, then the **Hole Features** would have been created the 'right way up' relative to the Z Axis.*

It is also possible to control the resultant direction from within the **Create Holes** dialogue. This is achieved if '**Use active workplane only**' is ***ticked*** along with selecting the option '**Find holes going down**'.

*Any **Hole Features** that are created to a different orientation from the original Z Axis, will automatically be assigned to a separate **Feature Set** and associated **Workplane**.*

In this case the holes were deliberately created upside down to demonstrate the **Reverse Holes** editing option.

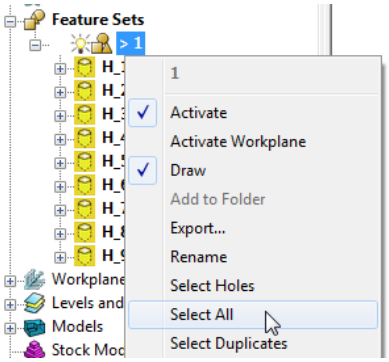

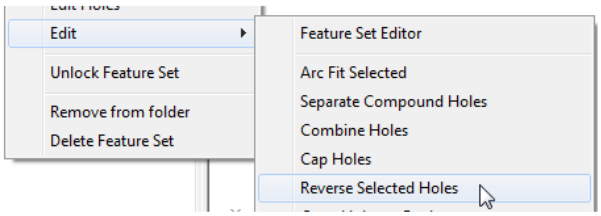

7 Right-click **Feature Set 1** and in the menu click **Select All** and then from the same menu, select **Edit** > **Reverse Selected Holes**.

8 Finally, select the top surface of the **Model** and in the **PowerMILL *explorer***, right-click **Feature Set 1** and from the local menu select **Edit** - **Cap Holes**.

The new **Capping Surfaces** will be generated (Tangential to the selected top surface) in a new **model** called **Capping Surfaces** created along with a new **level** of the same name.

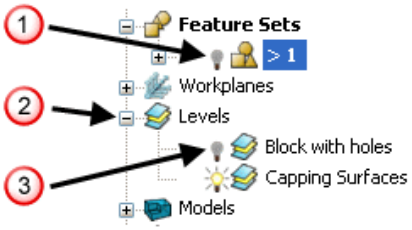

9 Click the ***light bulb*** to undraw **Feature Set 1** (1).

10 Expand **Levels** by clicking on the **+** symbol (2).

11 Click the ***light bulb*** to undraw main **surfaces** (3).

The new **Capping Surfaces** may be created inside out (Surface Normals reversed). If required they can be selected and from the local **Surfaces** menu, **Reverse Selected** can be applied.

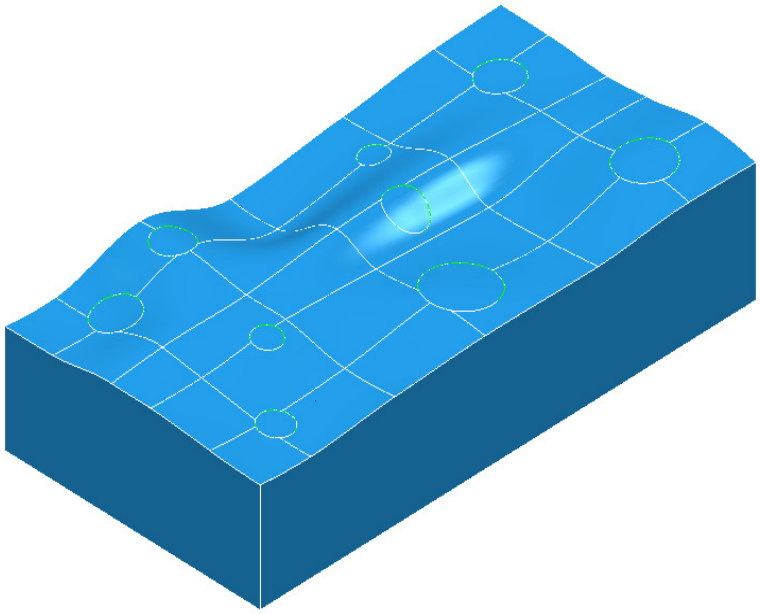

*The **Capping Surfaces** are automatically assigned to the new **Level** for easy selection.*

12 Click on the ***light bulb*** on the ***Block with holes*** level to re-display the main model.

 Copyright © Delcam Ltd

Internal Thread Milling

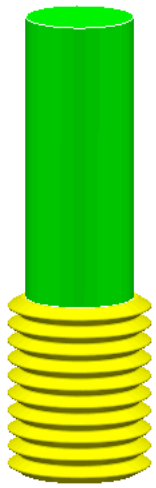

Thread Milling is included as one of the options in the **Drilling** dialog.

If the **Cycle Type** - **Thread Milling** option is selected, the tool plunges centrally to a specified depth, leads on to the sidewall, and then pitches upwards before leading off.

Within the options it is possible to apply a number of passes (stepping outwards by an allowance value) to avoid tool overload. It is also possible to choose either a Right Hand or Left Hand thread.

1 Select **File > Delete All** and **Tools > Reset forms**.

2 **Open** the **Project**:

....\PowerMILL_Data\Projects\ThreadMILL_2014-Start

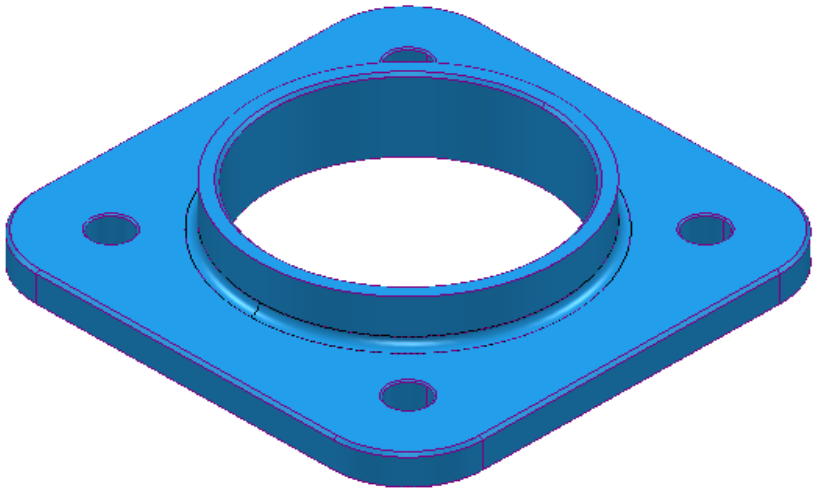

3 Select **File > Save Project As**:

.....\COURSEWORK\PowerMILL-Projects\ThreadMILL-Example1

4 **Activate** the ***Thread Milling*** Tool named **M40-Coarse-Pitch-5**.

5 **Activate** the **Feature Set** named **Pocket** (This defines the large central hole).

6 Select **Toolpath Strategies** and in the **Strategy Selector** dialog, select the **Drilling** tab followed by the **Thread Mill** option**.**

7 In The **Drilling** dialog set both ***Radial*** and ***Axial*** **Thickness -3**, **Pitch 5**, **Name M40-RH-IntThread**, leaving all other parameters as default (shown below).

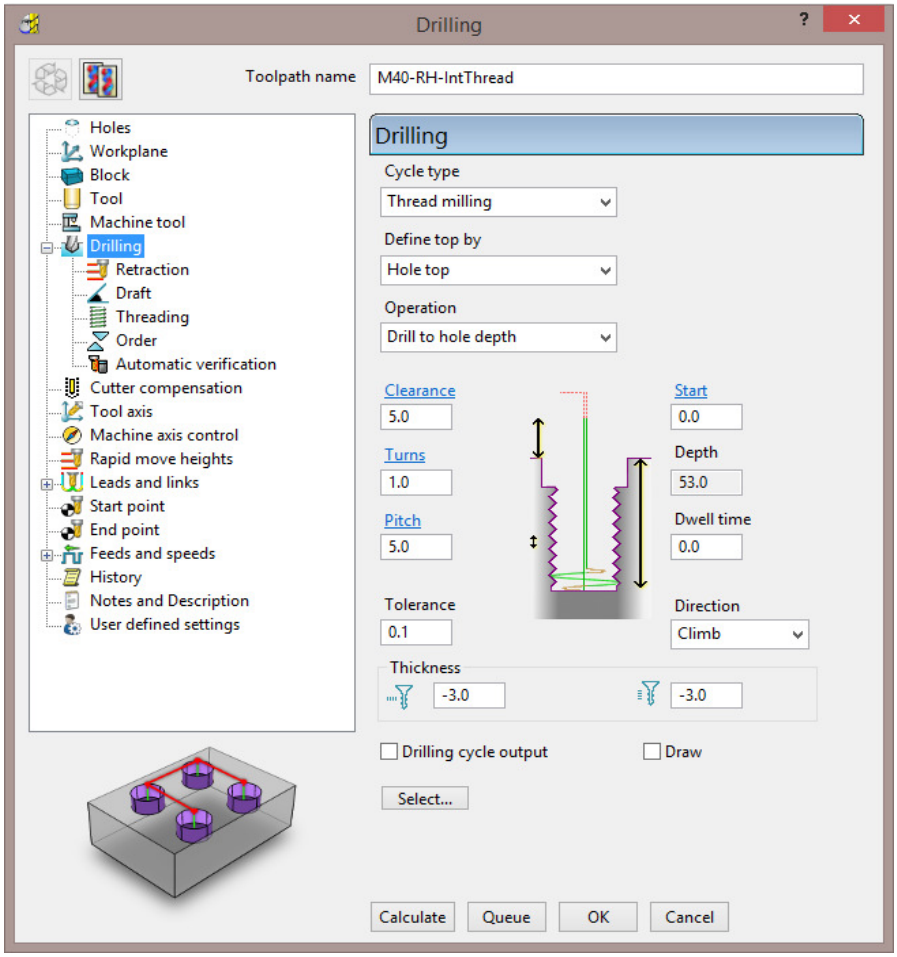

8 Select the **Cutter Compensation** page.

9 Tick the ***CNC cutter compensation*** box and select ***Type*** **Tool wear**.

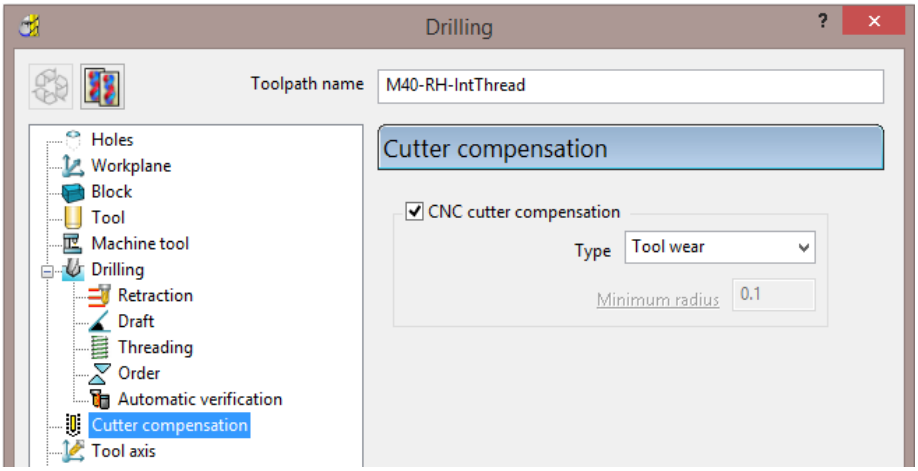

10 **Calculate** the form and then **Close** the dialog.

 Copyright © Delcam Ltd

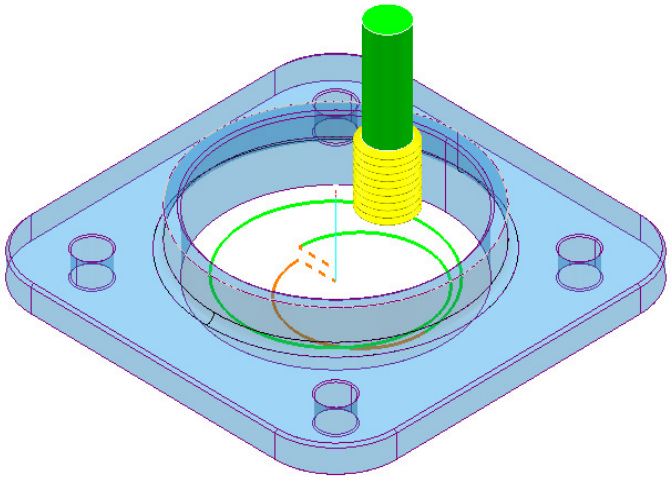

11 **Calculate** a new **Block** using **Defined by** - **Box** and **Type** - **Model**.

12 Right-click the **NC Program** ***MC-All*** and in the local menu select **Simulate from Start**.

13 Open a new **ViewMILL** session and run a simulation of all toolpaths. (Do not activate any of the toolpaths, otherwise the current **Block** will become oversize).

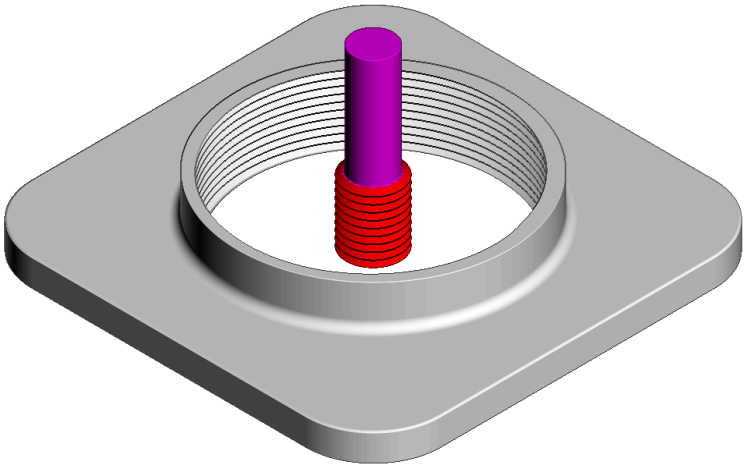

The completed **ViewMILL** simulation is as shown above.

14 Disconnect **ViewMILL** from the **simulation** (but do not apply **Exit ViewMILL**), and return to the **PowerMILL** window.

External Thread Milling

15 **Activate** the **Feature Set** named **Boss** (This defines the outside of the central boss).

16 Select **Toolpath Strategies** and in the **Strategy Selector** dialog, select the **Drilling** tab followed by the **External Thread** option.

17 In The **Drilling** dialog, set the ***Cycle Type*** to **External Thread**, both ***Radial*** and ***Axial*** **Thickness -3**, **Pitch 5**, ***Name*** **M40-RH-IntThread**, leaving all other parameters as default (as shown below).

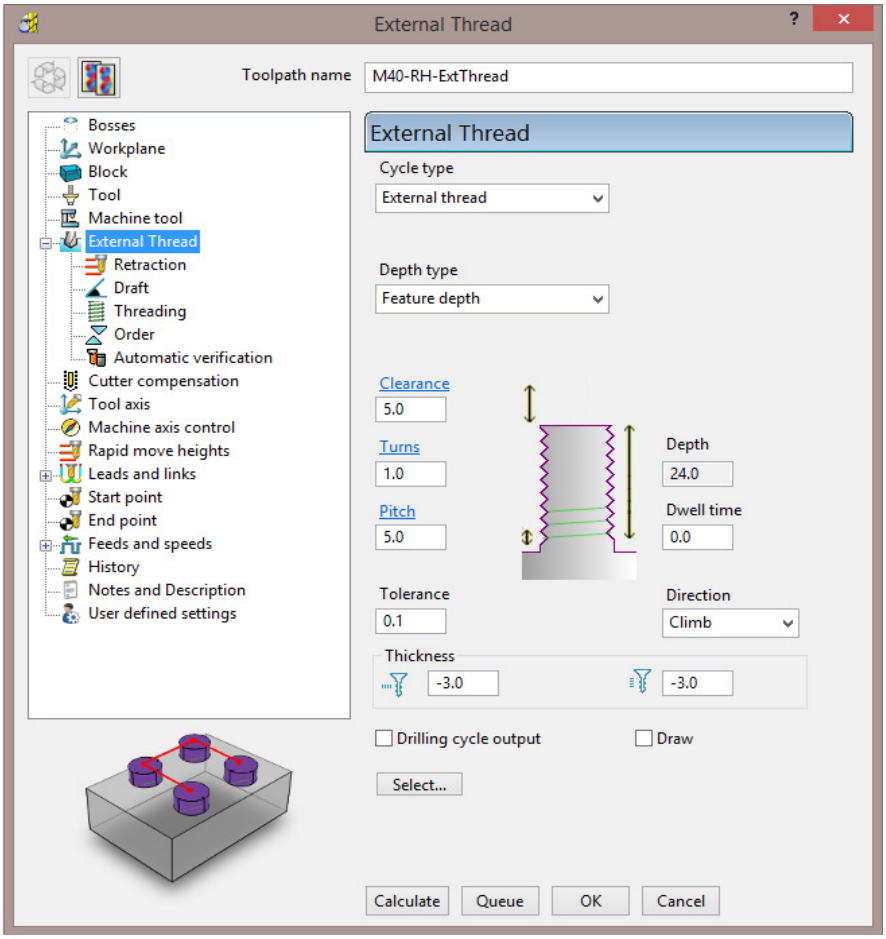

18 Select the **Threading** page and select the ***Use a 45 degree arc*** lead option.

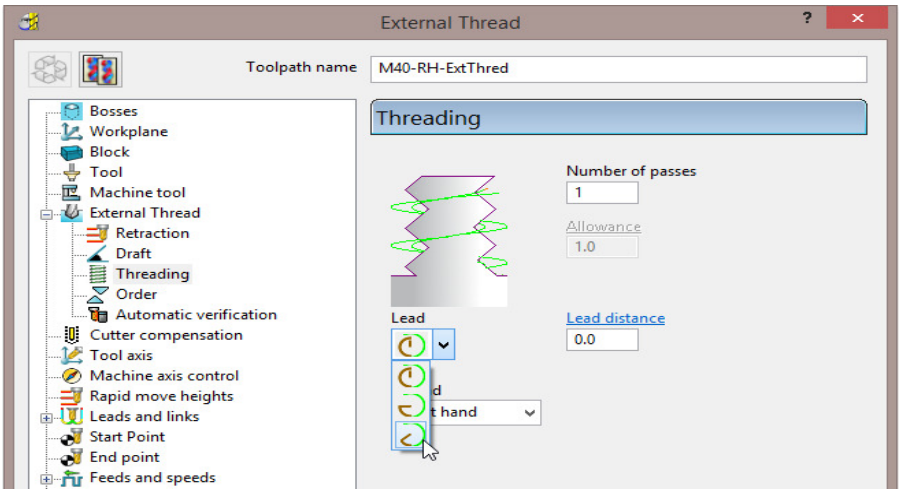

19 **Calculate** the form and then **Close** the dialog.

20 Re-open and re-connect the **ViewMILL** session and run a **simulation** of the latest ***toolpath*** **M40_RH-ExtThread**.

 Copyright © Delcam Ltd

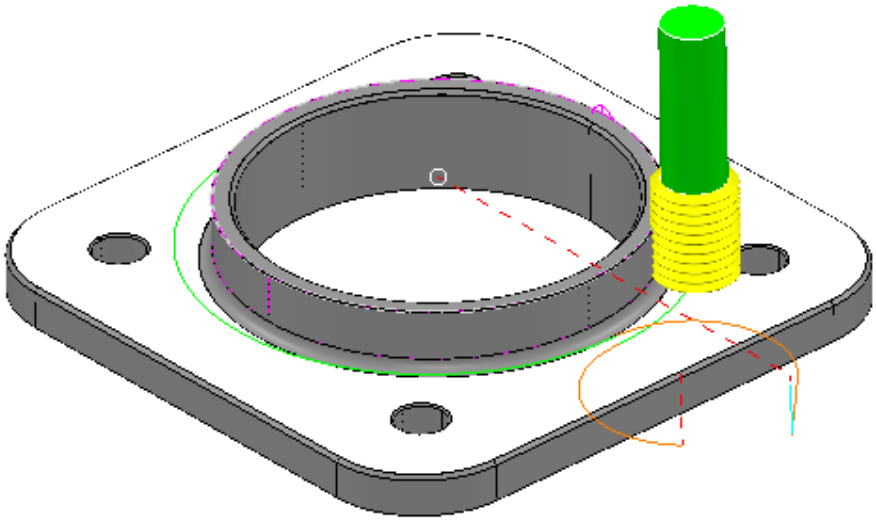

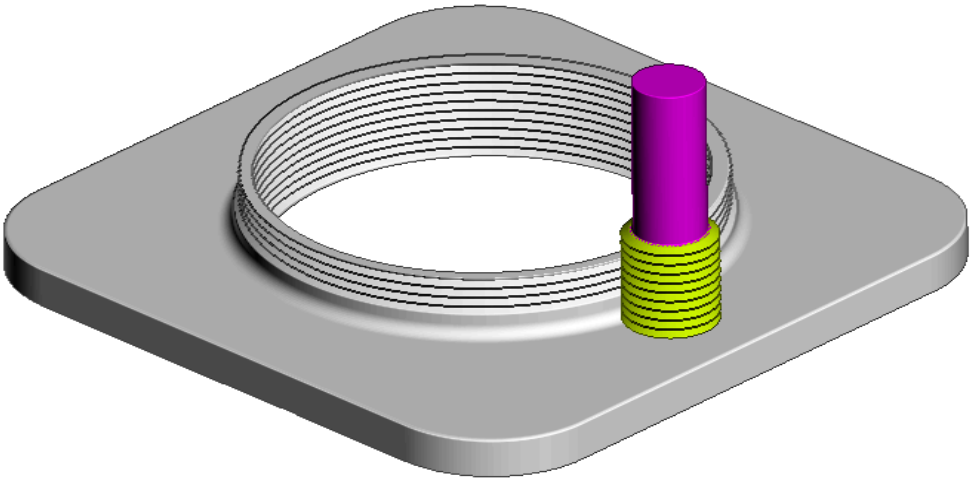

21 Select **File** - **Save Project**.

2D Curve Machining

PowerMILL contains 3 strategies that directly machine relative to 2D **Pattern** segments. These include:

- **2D Curve Area Clearance**.
- **2D Curve Profile**.
- **Chamfer Milling**.

There is also a dedicated **Face Milling** strategy that calculates relative to the **Block** dimensions.

Example 1

1 Select **File** > **Delete All** and **Tools** > **Reset Forms**.

2 **Open** the **Project**:

.....\PowerMILL_Data\Projects\2DCurve-2015mc-Start

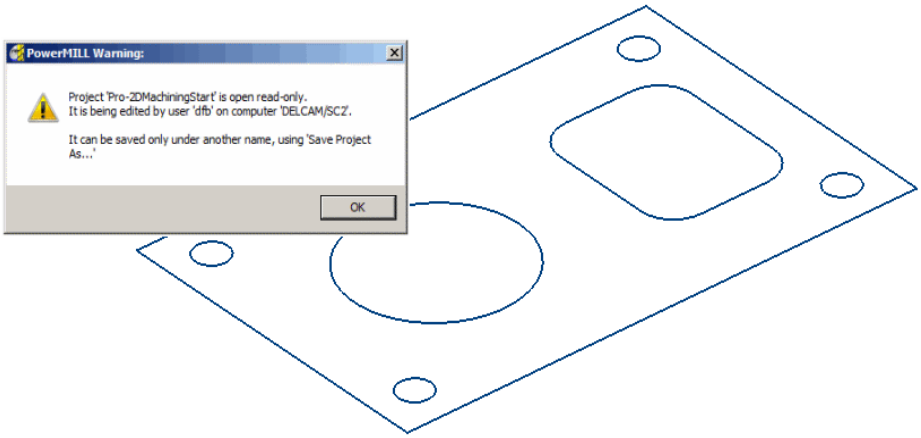

3 Select **File** > **Save Project As**:

.....\COURSEWORK\PowerMILL-Projects\2DCurve-Machining

4 **Activate** the **Pattern** named **CurveAll**.

5 **Calculate** a **Block** using **Defined by - Box** and **Type** - **Active Pattern** (Do not close the dialog).

6 In the **Minimum Z** co-ordinate box input -**22** before selecting **Accept** to close the dialog.

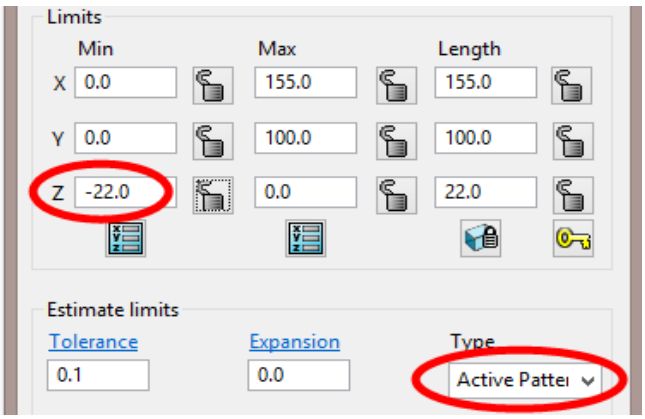

 Copyright © Delcam Ltd

7 In the **Rapid Move Heights** dialog select **Calculate**.

8 **Activate** the ***Face Milling*** tool named **D50T6**.

9 From the **2.5D Area Clearance** options select **Face Milling** and enter data into the dialog exactly as shown below.

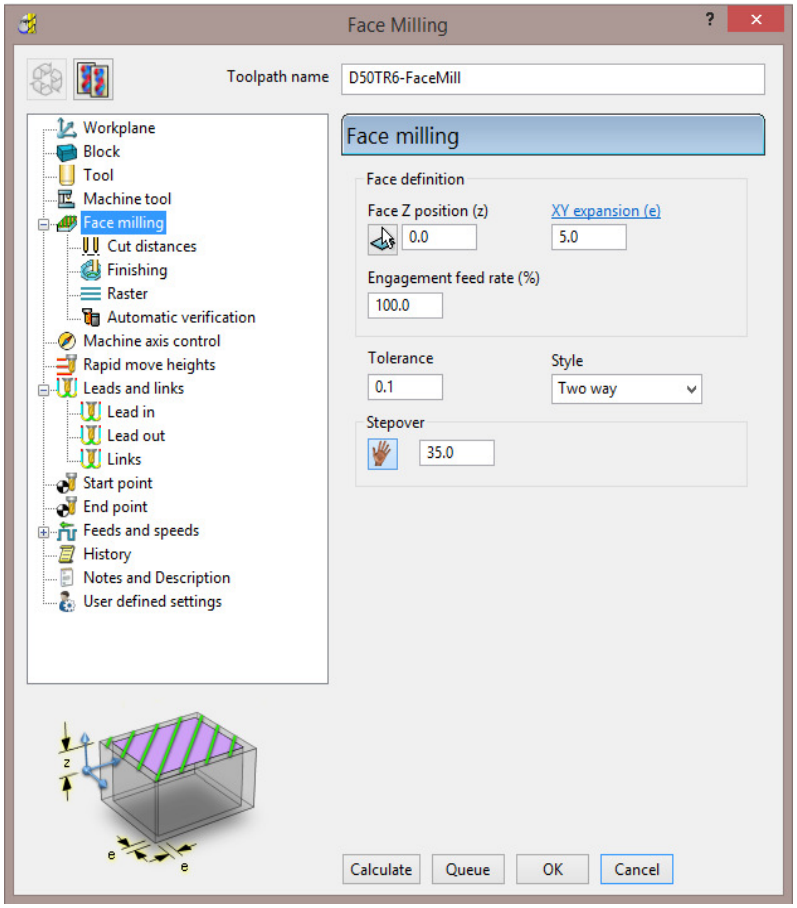

10 In the **Leads and Links** – **Links** page and set the ***Short/Long threshold*** as **40** and ***Short*** as **Circular Arc**.

11 Click **Calculate** to create the toolpath and then **Close** the dialog.

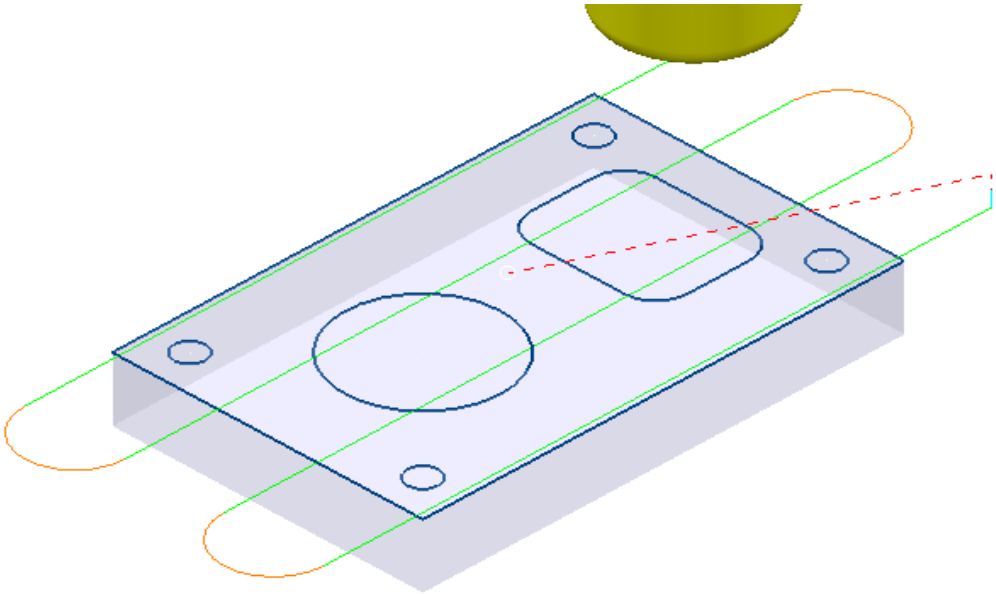

12 **Activate** the ***Tip Radiused*** tool named **D16T3**.

13 In the **2.5D Area Clearance** options select **2D Curve Area Clearance** and enter data into the form exactly as shown below.

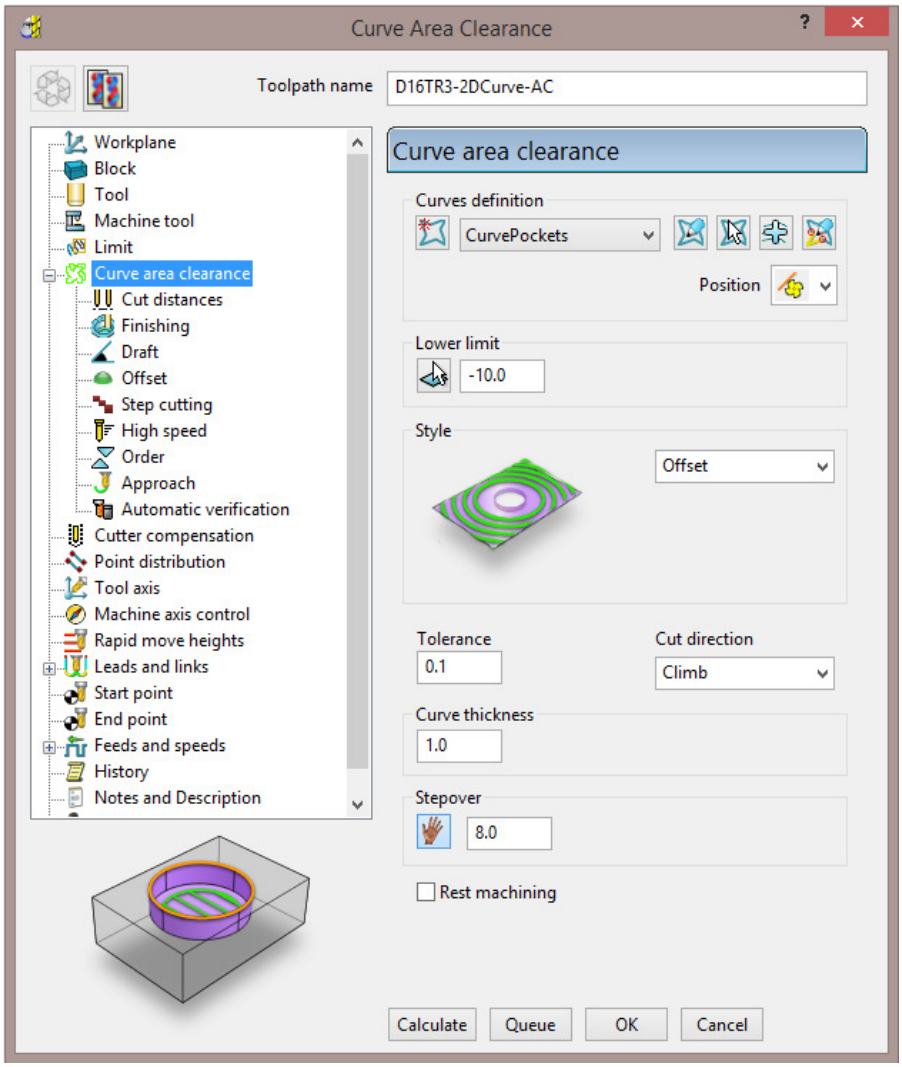

14 Select the **Cut distances** page and input **Stepdown 10**.

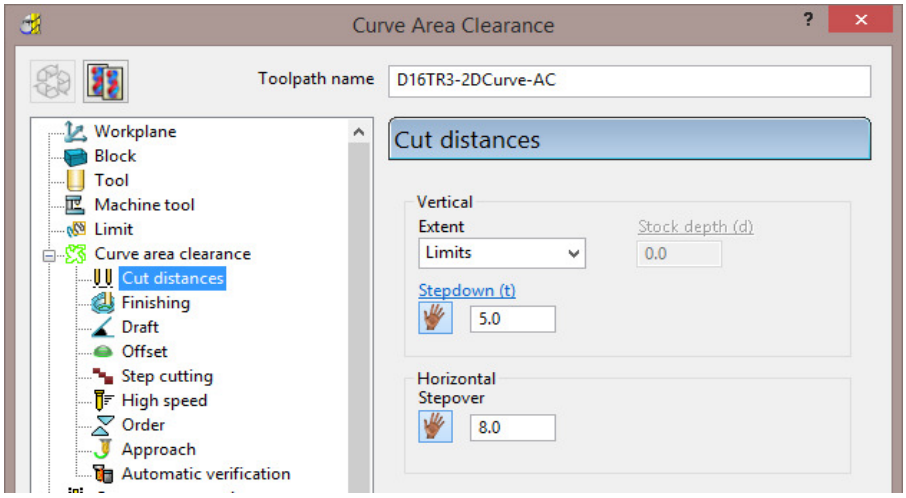

 Copyright © Delcam Ltd

15 In the **Leads and Links** – **Lead in** page select:-

1st choice > **Ramp**

Ramp Options > ***Follow*** **Circle** - **Max zig angle 4** - ***Circle diameter (TDU)*** **0.65**

16 From the main **Curve area clearance** page, ***Curves definition***, select ***Interactively modify machinable sections*** .

These options enable the user to have full control of direction of cut and the areas to be machined.

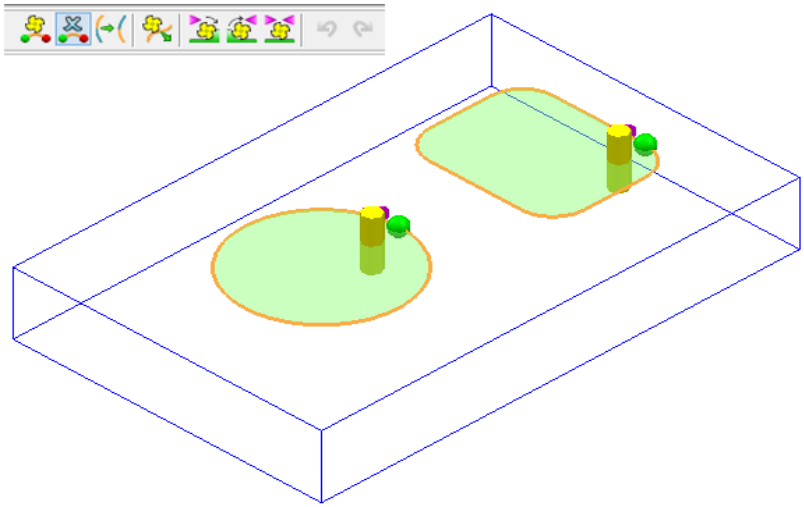

*While the **Curve Area Clearance** form is open, the areas to be machined are displayed as a shaded preview.*

17 Select to exit the **Interactively modify machinable sections** toolbar.

18 Select **Calculate** to create the toolpath and then **Close** the dialog.

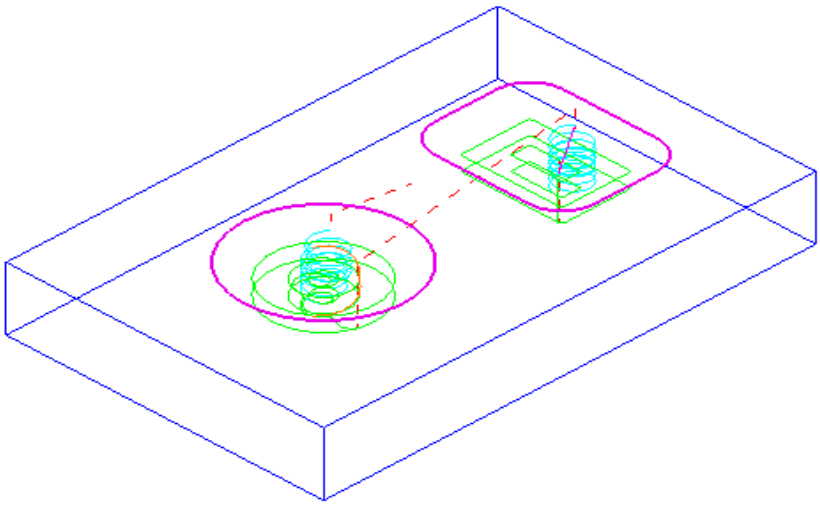

19 **Activate** the ***End Mill*** named **EM16**.

20 From the **2.5D Area Clearance** options select **2D Curve Profile** and enter data into the dialog exactly as shown below.

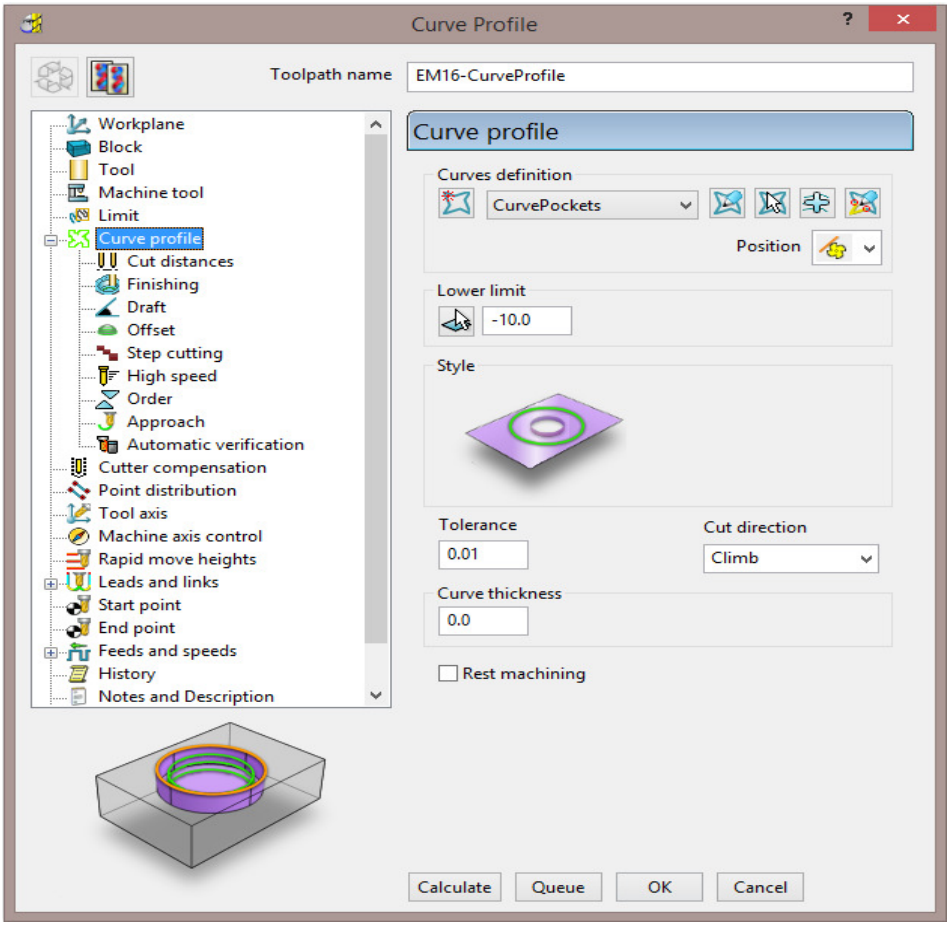

21 Select the **Cut distances** page and input **Stepdown 25**.

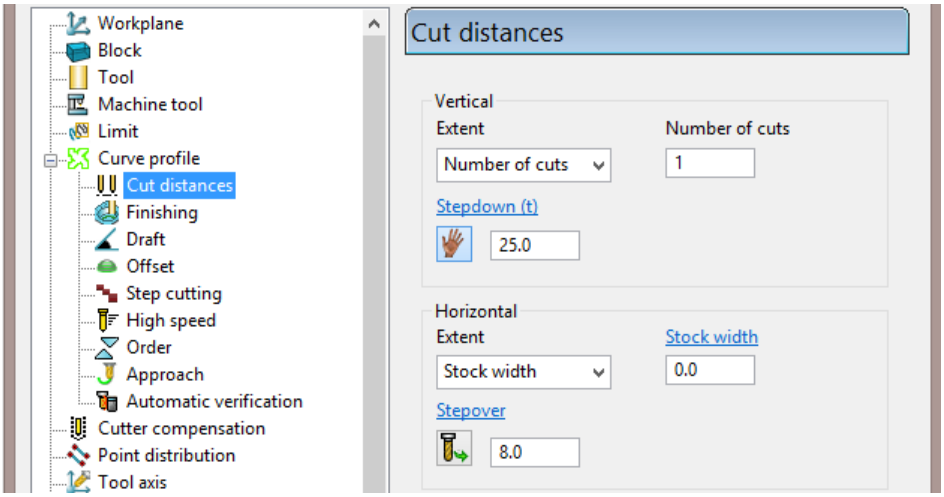

22 Select the **Lead in** page and for **1st Choice** select **Pocket Centre** and then select the ***Lead out same as lead in*** option .

23 Click **Calculate** to process the toolpath and then **Close** the dialog.

 Copyright © Delcam Ltd

*For the leads to work in this case it is necessary to apply **Edit - Move Start Points***

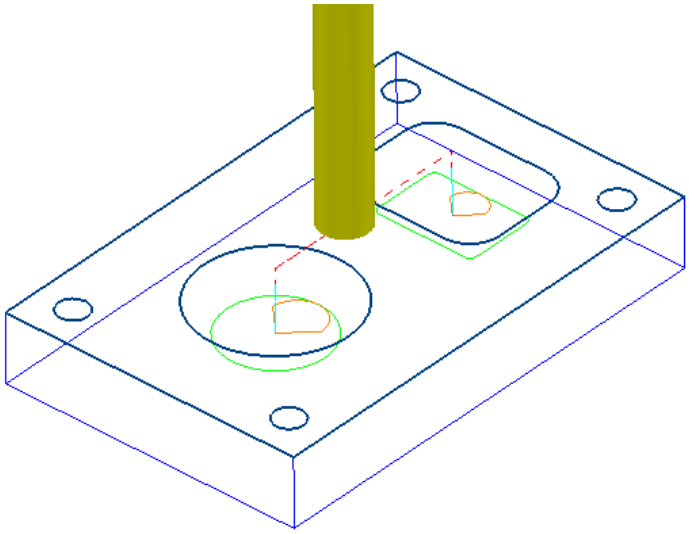

24 **Activate** the Chamfer Tool named **D25Tr1A45**.

25 From the **2.5D Area Clearance** options select **Chamfer milling** and enter data into the dialog exactly as shown below (Do not select Calculate yet!).

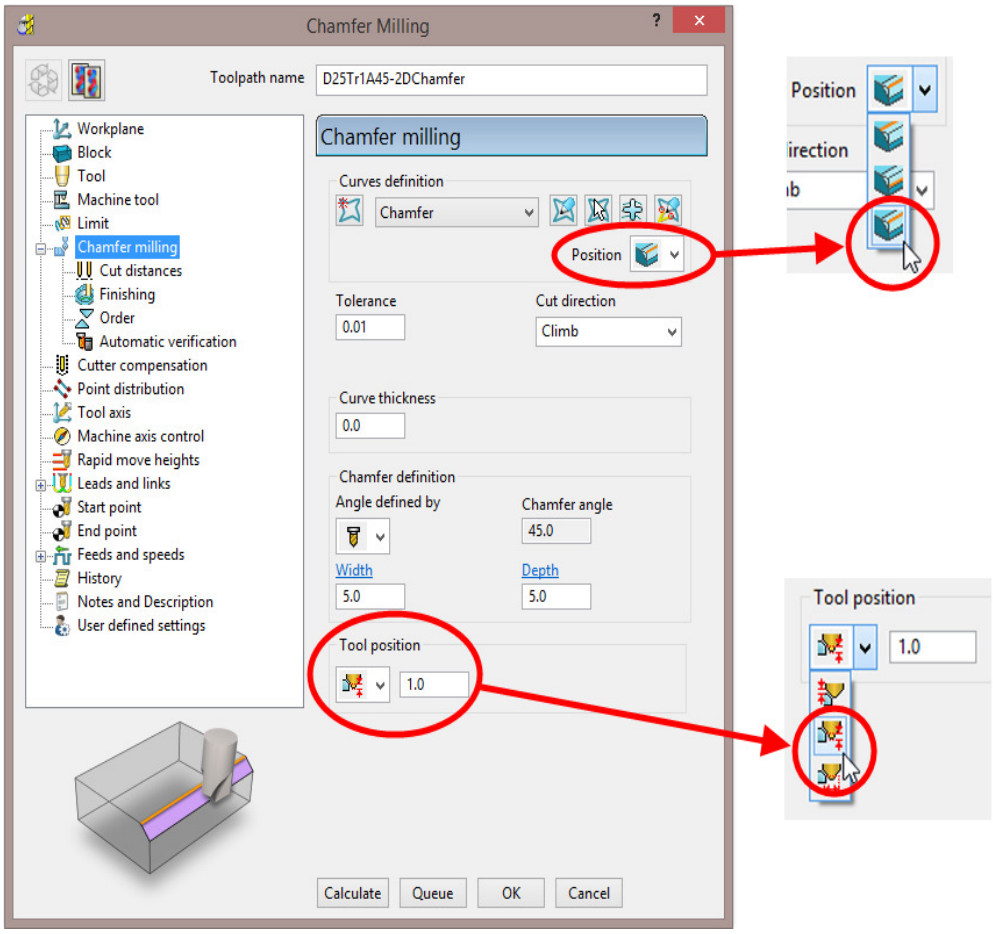

26 Select the **Cut distances** page and input **Number of cuts** as **1**.

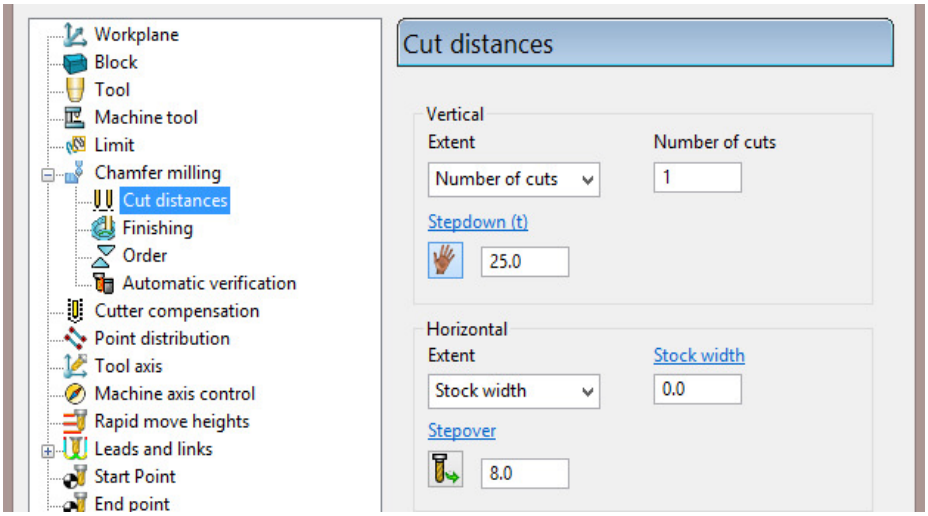

27 Click **Calculate** to process the toolpath (Do not close the dialog).

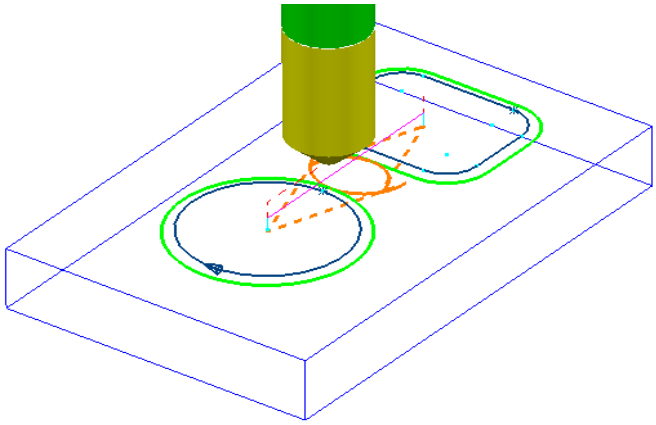

The resultant **Chamfer milling** strategy has appeared (incorrectly) on the outside of the **Pattern** segments.

The toolpath needs to be recycled with the **Chamfer Milling** tool tracks changed to appear on the inside of the **Pattern** segments.

28 In the **Chamfer milling** dialog, select the ***Recycle*** icon to enable changes to be made to the above strategy.

29 Select **Interactively modify machinable sections** to access the ***Edit Machinable Sections*** toolbar.

30 Select the **Reverse machining side** option, followed by to accept the changes and close the toolbar.

31 In the main **Chamfer milling** dialog, select **Calculate** to create the **toolpath** and then **Close** the dialog.

 Copyright © Delcam Ltd

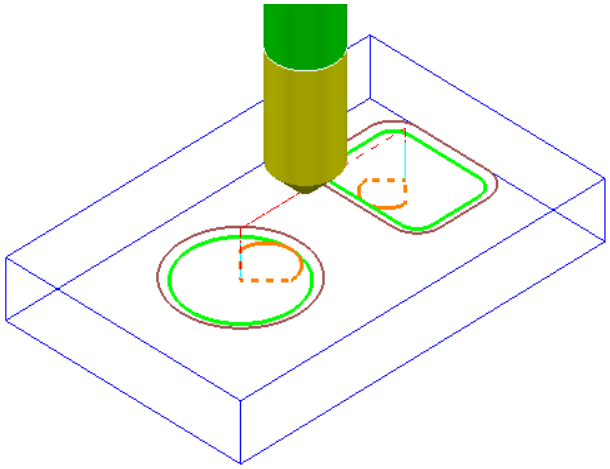

The **Chamfer milling** options selected result in the angled part of the tool overlapping the base of the chamfer by 1mm.

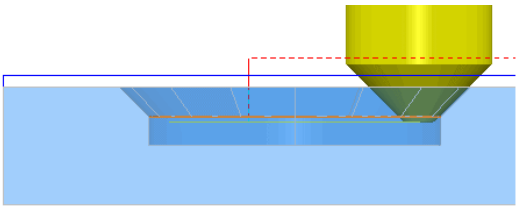

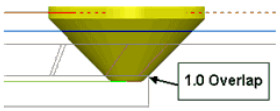

A 3D **model** of the finished component has been imported to provide a visual check of the **Chamfer machining**.

32 Run a **ViewMILL** simulation of the whole machining process.

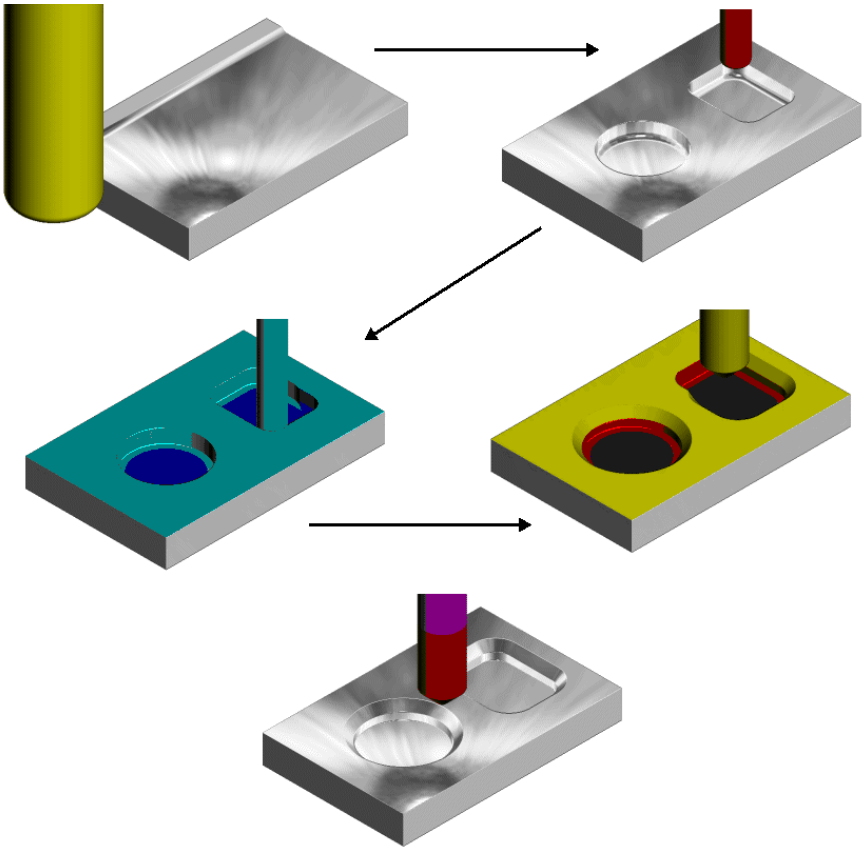

Cutter Compensation Example

Where applicable a **Cutter Compensation** page is available in a **2.5D Machining Strategy** dialog ***explorer*** options.

1. Select **File** - **Delete All** and **Tools** - **Reset forms**.
2. In the **PowerMILL *explorer*** right click on **Patterns** and from the local menu select **Create Pattern**.
3. Rename the **Pattern** as **Profile1**.
4. Right click on the new **Pattern** and from the local menu select **Curve Editor**.

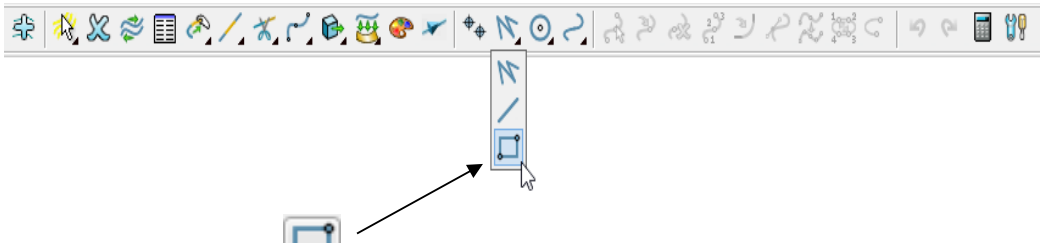

5. Select **Rectangle** from the lines options.

6. In the data input box (below the graphics area) input **0** to set the 1st corner of the rectangle, followed by **100 50** to define the X Y dimensions.
7. Select **Rectangle** from the lines options again to deselect it.
8. Select the ***green tick*** to close the **Curve Editor** and accept the rectangular **Pattern**.
9. In the **PowerMILL *explorer*** right click on **Workplanes** and from the local menu select **Create Workplane**.
10. In the **Workplane Editor** toolbar, select the ***green tick*** save.
11. **Activate** the new **Workplane**.
12. Create a Dia 10 **End Mill** named **EM10**.
13. **Calculate** a **Block** using **Defined by** – **Box** and **Type** – **Active Pattern**.
14. Input the value ***Min Z*** as **-20** and then lock both **Min Z** and **Max Z** values.
15. Input **Expansion 15** and then select **Calculate** to add stock to the X and Y dimensions of the **Block**.

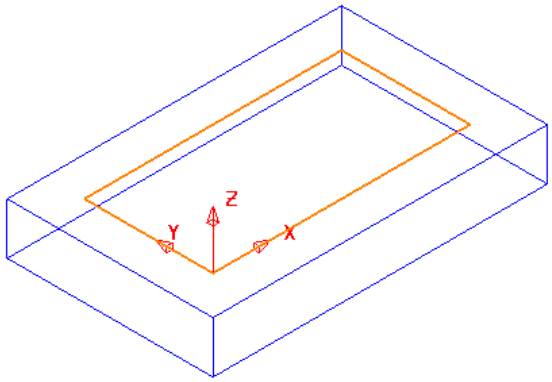

 Copyright © Delcam Ltd

16 In the **Rapid Move Heights** dialog select **Calculate**.

17 In the **Strategy Selector** form select the **2.5D Area Clearance** options.

18 Then select the **2D Curve Profile** strategy and enter data as shown in the following illustration.

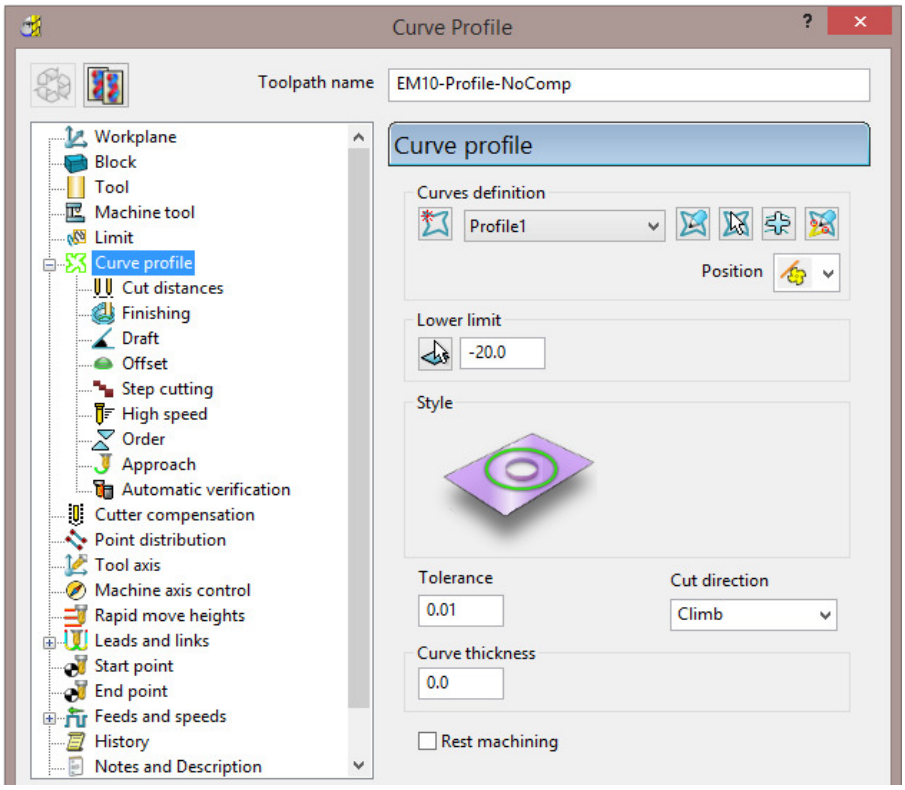

19 Select the **Cut Distances** page and input **20** for both the **Stock depth** and the **Stepdown**.

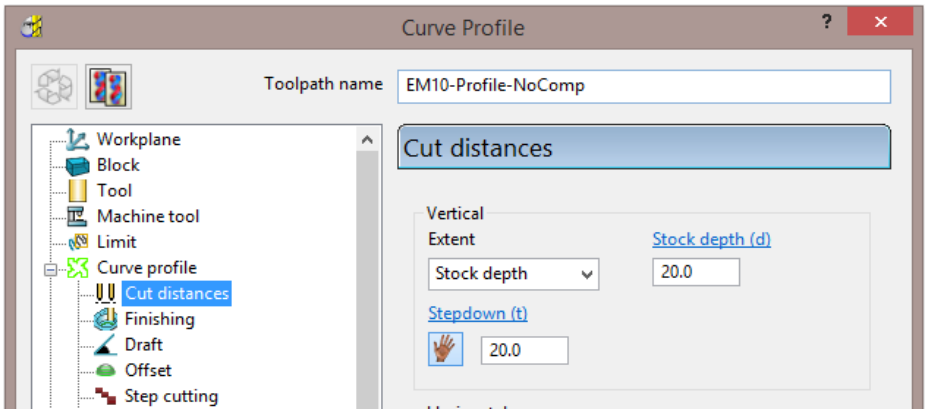

20 Return to the **Curve Profile** page and select the ***Edit Machining Sections options.***

21 If required, select **Reverse machining side** to move the profiling pass to the outside of the **Pattern**.

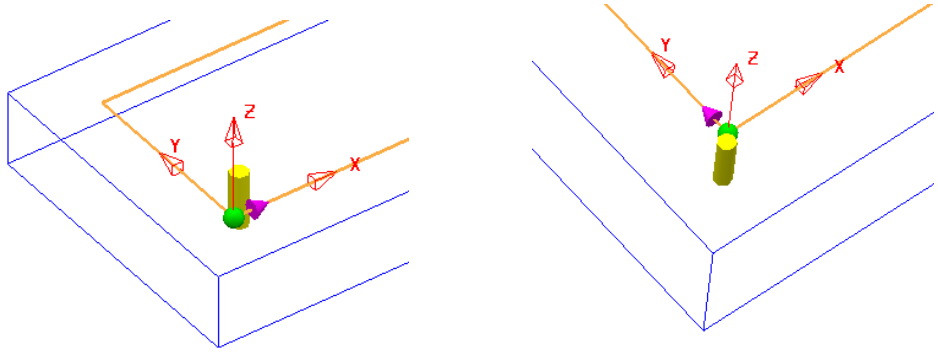

The above preview shows the cutter being switched from the inside to the outside of the **Pattern** prior to calculating the toolpath.

*This toolpath will not contain any data that relates to **Tool Compensation** output.*

22 Select the ***green tick*** to accept the changes and exit **Edit Machining Sections**.

23 **Calculate** the **Curve Profile** toolpath.

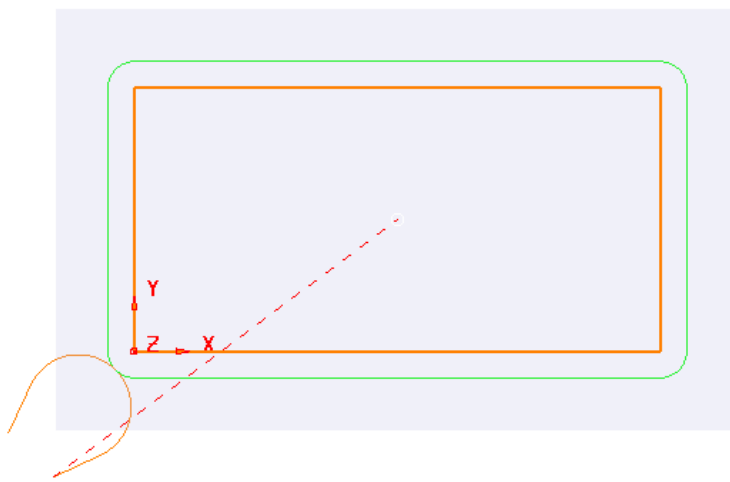

24 Open the **Leads and Links** form and select **Lead in** – **Horizontal Arc** – **Angle 110** and **Rad 10**.

25 Copy the **Lead In** settings to **Lead Out**.

26 Select **Extensions** and input an **Extended move** of **10** for both **Inward** and **Outward**.

27 **Apply** the **Leads and Links** settings to the active toolpath.

28 Right click on the active toolpath (**EM10-Profile-NoComp**) and from the local menu select **Settings** to open the **Curve Profile** dialog.

29 Once the **Curve Profile** dialog is open select the ***Make a Copy*** option.

30 **Rename** the new toolpath as **EM10-Profile-FullComp**.

31 Select the **Cutter Compensation** page, tick the **CNC cutter compensation** box, and select **Type** as **Full radius**.

 Copyright © Delcam Ltd

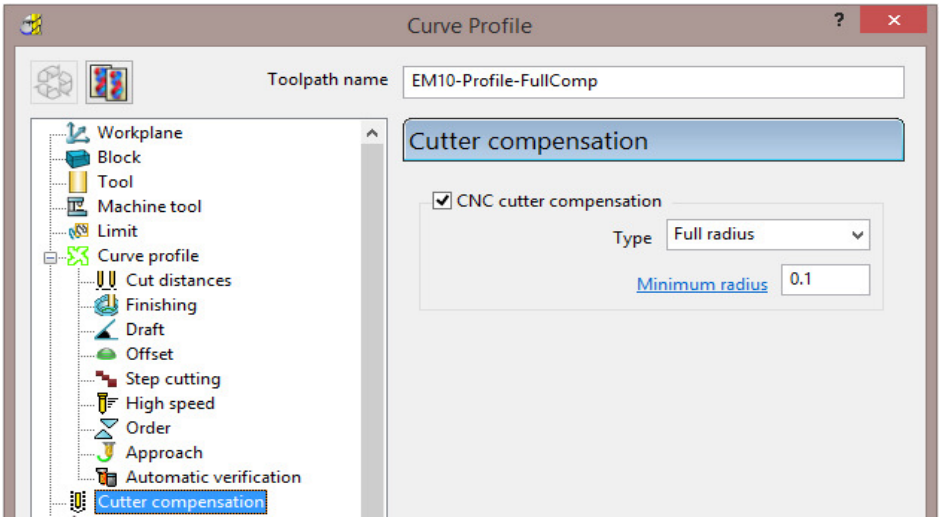

32 **Calculate** the new **Curve Profile** toolpath, but do not close the form.

33 To test the validity of the applied tool compensation the **Toolpath** toolbar needs to be active (**Main** pulldown menu:- **View** – **Toolbar** – **Toolpath**).

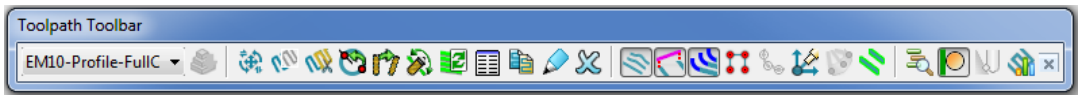

34 In the **Toolpath** toolbar select the **Draw compensated toolpath** option.

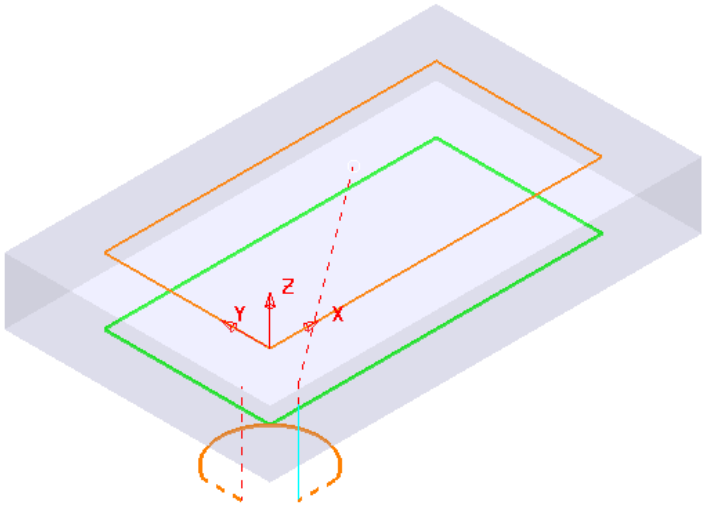

If **Full Compensation** is successfully applied it is displayed as a **thicker** green toolpath but offset inwards to the same **XY** dimensions as the **Pattern** (If the toolpath is displayed in red then the compensation is not geometrically valid).

35 Select the **Make a Copy** option again.

36 **Rename** the new toolpath as **EM10-Profile-WearComp**.

37 Select the **Cutter Compensation** page, tick the **CNC cutter compensation** box, and select **Type** as **Tool wear**.

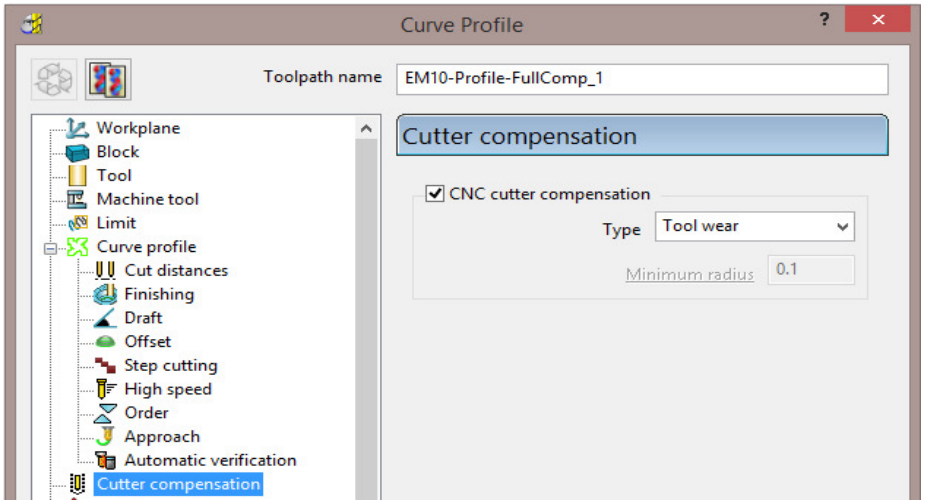

38 **Calculate** the new **Curve Profile** toolpath, and then **Close** the dialog.

39 In the **Toolpath** toolbar select the **Draw compensated toolpath** option.

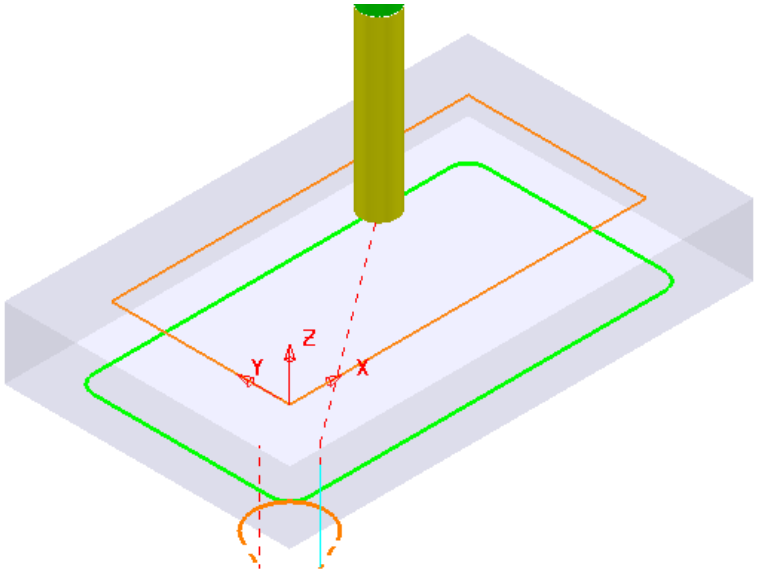

If **Wear Compensation** is successfully applied it is displayed as a **thicker** green version of the original toolpath.

40 **Save Project As**:-

.....\COURSEWORK\PowerMILL-Projects\ToolCompExample

 Copyright © Delcam Ltd

Viewing the NCData output files for a heid controller

41 In the **PowerMILL *explorer***, right mouse click on **NC Programs** and from the local menu select **Preferences**.

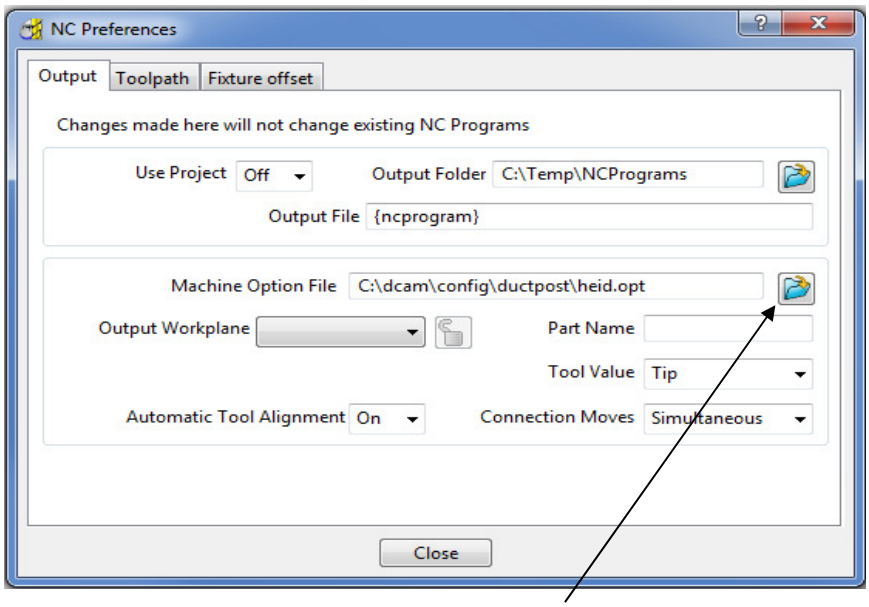

42 Open the folder containing the ***Machine Option File*** and from the list select the file **heid.opt** and click the **Open** tab.

43 **Close** the **NC Preferences** dialog.

44 In the **PowerMILL *explorer*** right mouse click on **Toolpaths** and from the local menu select **Create Individual NC Programs**.

45 Right mouse click on **NC Programs** and from the local menu select **Write All**.

46 Minimise the **PowerMILL** window to access the ***Desktop*** options and select **Windows explorer** (Or for ***Windows 8*** use **File explorer**).

47 Once ***Windows explorer*** has opened browse to **C:\temp\NCPrograms**.

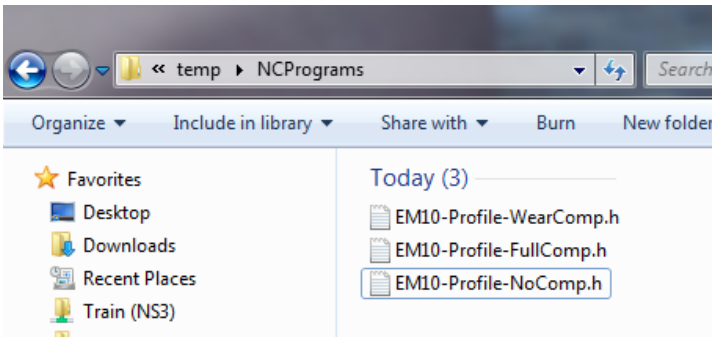

48 In **Windows *explorer***, right mouse click on an ***NCdata*** output file and from the local menu select **Open with** – **WordPad**.

49 Repeat stage **73-74** for all 3 ***NCdata*** output files and compare the output.

Full Compensation

```
0 BEGIN PGM  1 MM
1 TOOL DEF 23 L+0,000 R+0,000
2 TOOL CALL 23 Z S1350,000
3 L Z+10,000 R0 F9999 M
4 L X-15,443 Y-23,896 R0 F9999 M03
5 L Z+5,000 R0 F M
6 L Z-20,000 R0 F40 M90
7 L X-4,267 Y-24,201 RL F400 M
8 CC X-10,607 Y-10,607
9 C X+0,000 Y+0,000 DR+ RL F M
10 L Y+50,000 RL F M
11 L X+100,000 RL F M
12 L Y+0,000 RL F M
13 L X+0,000 RL F M
14 CC X-10,607 Y-10,607
15 C X-24,201 Y-4,267 DR+ RL F M
16 L X-23,896 Y-15,443 R0 F M
17 L Z+10,000 R0 F9999 M
18 STOP M02
19 END PGM  1 MM
```

Wear Compensation

```
0 BEGIN PGM  1 MM
1 TOOL DEF 23 L+0,000 R+0,000
2 TOOL CALL 23 Z S1350,000
3 L Z+10,000 R0 F9999 M
4 L X-15,443 Y-23,896 R0 F9999 M03
5 L Z+5,000 R0 F M
6 L Z-20,000 R0 F40 M90
7 L X-6,380 Y-19,670 RL F400 M
8 CC X-10,607 Y-10,607
9 C X-3,536 Y-3,536 DR+ RL F M
10 CC X+0,000 Y+0,000
11 C X-5,000 Y+0,000 DR- RL F M
12 L Y+50,000 RL F M
13 CC X+0,000 Y+50,000
14 C X+0,000 Y+55,000 DR- RL F M
15 L X+100,000 RL F M
16 CC X+100,000 Y+50,000
17 C X+105,000 Y+50,000 DR- RL F M
18 L Y+0,000 RL F M
19 CC X+100,000 Y+0,000
20 C X+100,000 Y-5,000 DR- RL F M
21 L X+0,000 RL F M
22 CC X+0,000 Y+0,000
23 C X-3,536 Y-3,536 DR- RL F M
24 CC X-10,607 Y-10,607
25 C X-19,670 Y-6,380 DR+ RL F M
26 L X-23,896 Y-15,443 R0 F M
27 L Z+10,000 R0 F9999 M
28 STOP M02
29 END PGM  1 MM
```

*The output file using **Full Compensation** is exactly matching the geometry of the 100 X 50 rectangular Pattern.*

*The output file using **Wear Compensation** is offset by 10mm (the cutter radius) outside the 100 X 50 rectangular Pattern.*

50 **Save Project As**:-

.....\COURSEWORK\PowerMILL-Projects\ToolCompExample

Protected Cutter Compensation

With **Type** – **Full radius** selected any internal (concave) corners will require a suitable Minimum radius value included to allow for corner radii that are less than the required full offset value.

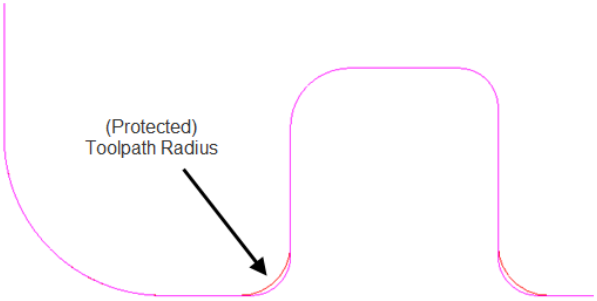

Copyright © Delcam Ltd

2D Curve Machining Example – Inc. Clamp Avoidance

1 Select **File** > **Delete All** and **Tools** > **Reset forms**.

2 **Open Project**:

.....\PowerMILL_Data\Projects\2DCurveProfileSplit-Start

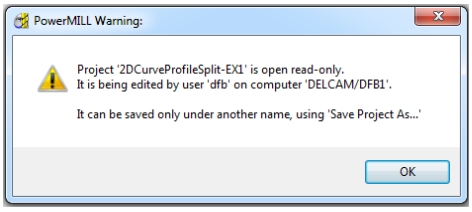

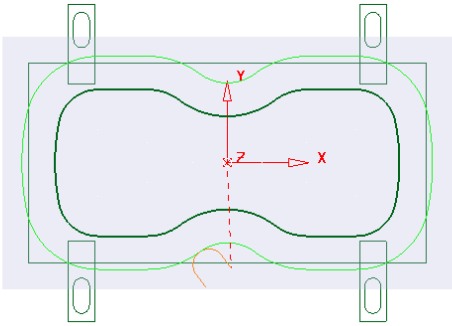

The imported **Project** also contains a Dia25 **End Mill** and a **Pattern** defining the 2D geometry used in the existing 2D Machining Strategy.

3 Select **File** > **Save Project As**:

.....\COURSEWORK\PowerMILL-Projects\2DCurveProfileSplit-EX1

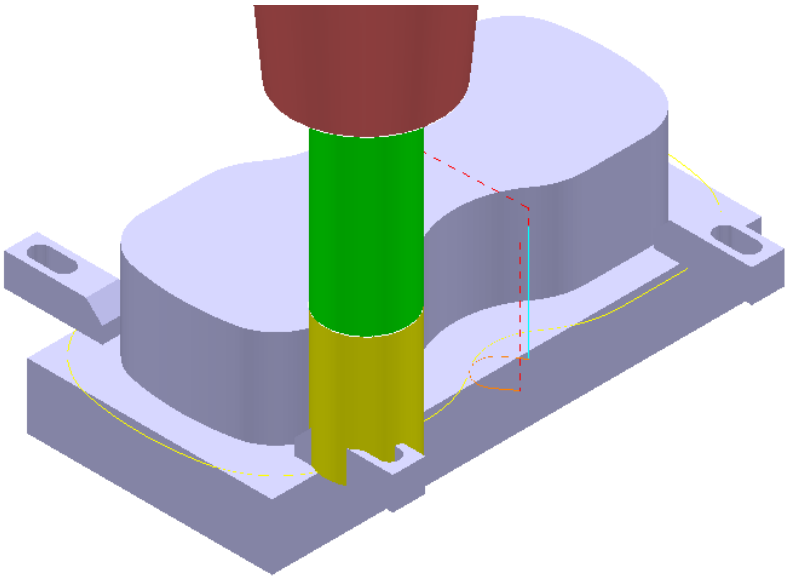

The existing 2D Curve profile toolpath is clearly passing straight through the defined clamp positions. This will be fixed by applying the Split Section option that is accessed from the 2D Curve Profile form.

4 Select a **View down Z**.

5 From the **Main** pulldown menus select, **Draw** - **Cursor** - **Tool** and **Draw - Cursor - Cross Hair** (Or use the shortcuts ***Crtl T*** and ***Ctrl H***).

6 Ensure that the **Pattern** - **OuterForm** is displayed (**PowerMILL *explorer***, light bulb on).

7 Right click on the toolpath **EM25-FullProfile** and from the local menu ensure **Activate** is ticked, and then select **Settings**.

8 Once the **Curve Profile** form is open select the ***Make a Copy*** option.

9 **Rename** the new toolpath as **EM25-SplitProfile**.

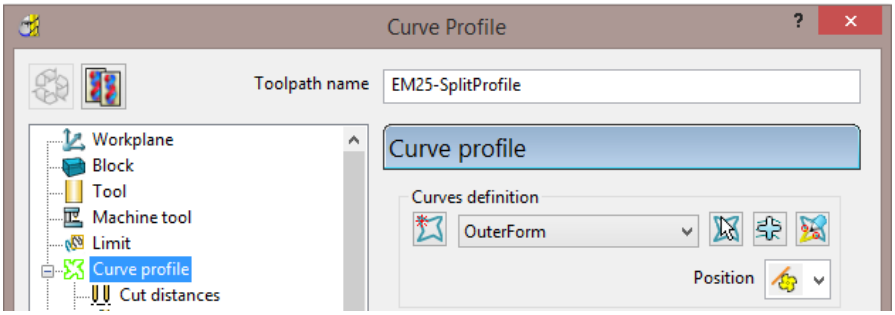

10 On the **Curve Profile** page select **Interactively modify machinable** sections.

11 While the above toolbar is open, move the cursor to a point on the left hand side of the **Pattern** segment, and then right click to open the local menu.

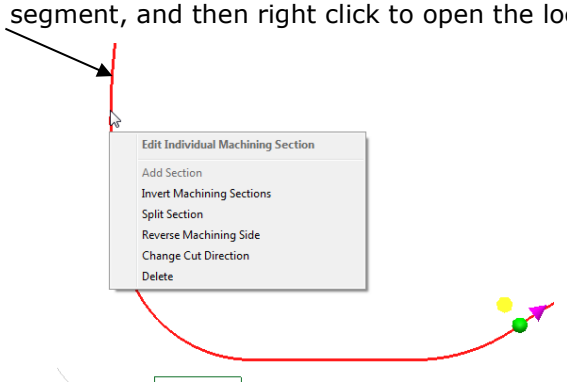

12 From the local menu select **Split Section** and an extra ***start and end*** point will be created on the **Pattern** at this point.

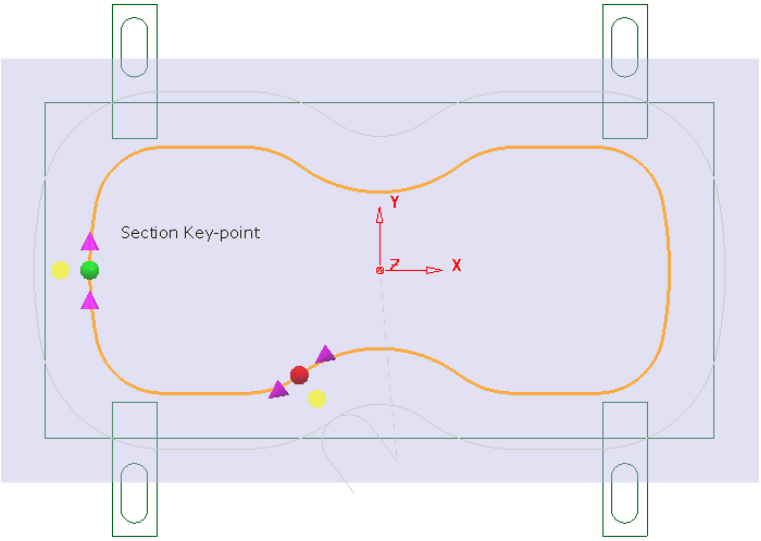

13 From the main pull down menus select **Draw** – **Cursor** – **Cross Hair** (Ctrl H).

 Copyright © Delcam Ltd

The cross hair will be displayed on the cursor to assist with alignment of start and end point.

14 Using the left mouse key, drag the new ***green*** - start point along the **Pattern** to a position to the right of the upper left clamp (as shown below).

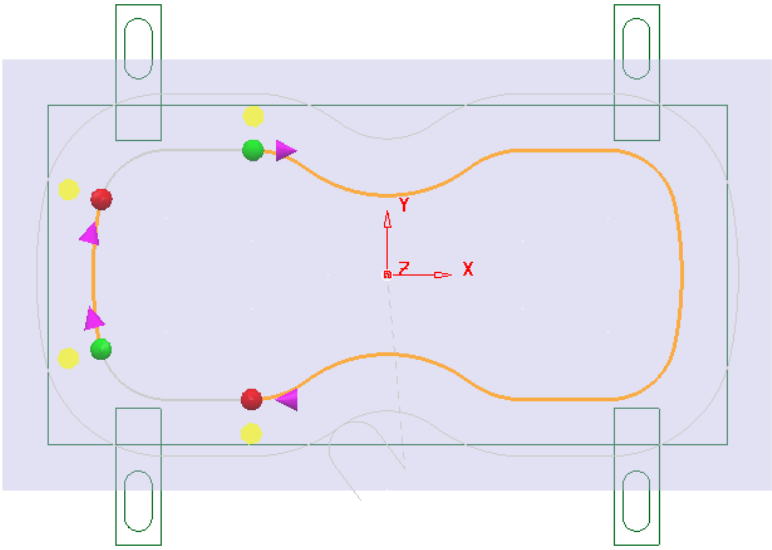

15 Locate and drag the corresponding ***red*** - end point to a position to the right of the lower left clamp (as shown above).

16 Repeat the process on the other (Left hand) span and drag the start and end points to the left hand side of the **Pattern** (as shown above).

17 Split the toolpath again twice, to the left of both the upper and lower right clamps (as shown below).

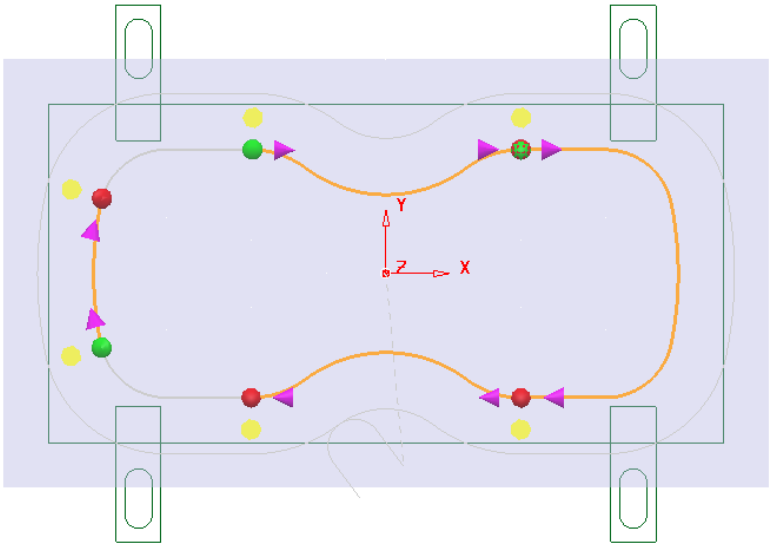

18 Move the new start and end points to form 4 distinct spans along the **Pattern** as shown in the following diagram.

For accurate alignment use the displayed cross hairs and key points.

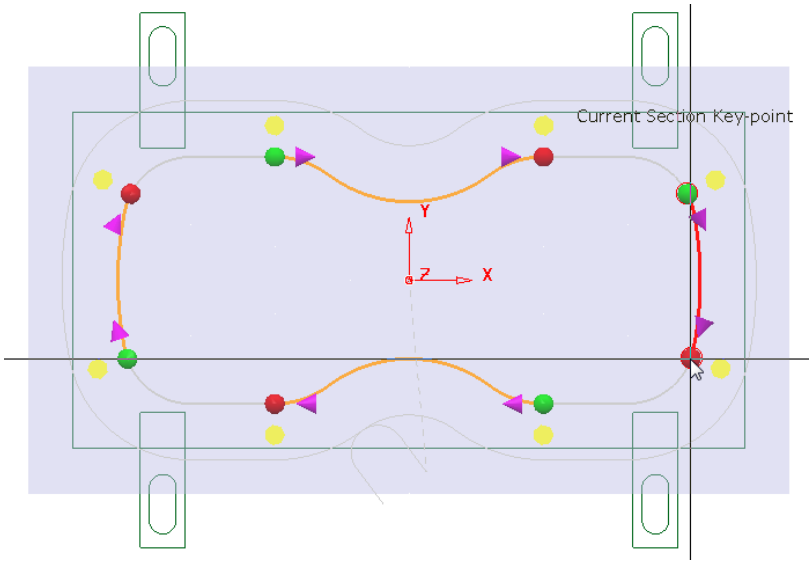

19 Once the 4 new spans have been aligned, select the green tick in the **Edit Machining Sections** toolbar to accept the modifications.

20 Back in the **Curve Profile machining** form select **Calculate** to process the new EM25-SplitProfile toolpath and then **Close** the dialog.

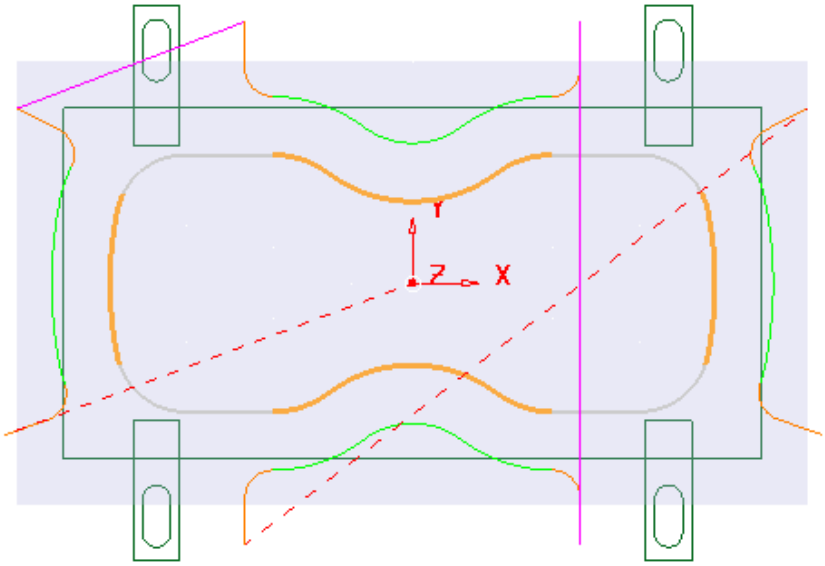

To check visually check the toolpath for collisions, a triangle model of the stock along with the clamps will be imported and used as the **ViewMILL** block.

21 Select an **ISO1** view.

22 Right mouse click on the toolpath **EM25-SplitProfile** in the **PowerMILL *explorer*** and from the local menu select **Simulate from start**.

23 Open the **Block** form and select **Defined by – Triangles** and **Coordinate System - Global Transform** (See diagram on next page).

24 Select the **Load block from file** option and browse to the model:-

....\PowerMILL_Data\Triangles\2DCurveprofileSplit.dmt

25 **Accept** the **Block** form.

 Copyright © Delcam Ltd

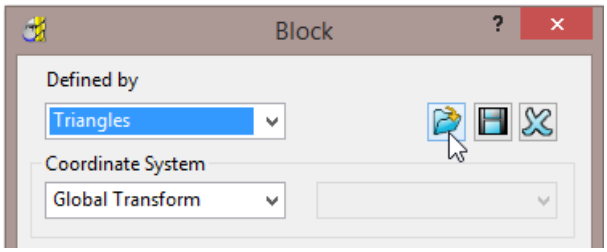

The **Block** will appear as shown below (**Opacity** slider set to full))

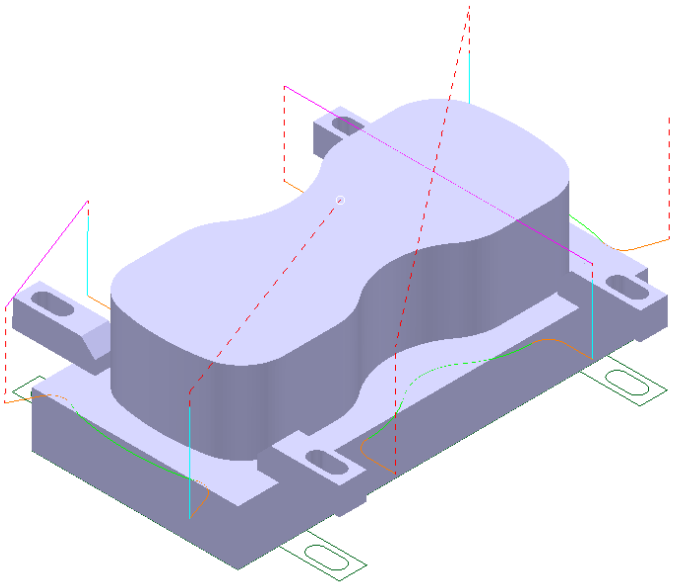

26 Connect **ViewMILL** to the toolpath simulation and run with the **Rainbow Shaded Image** option set.

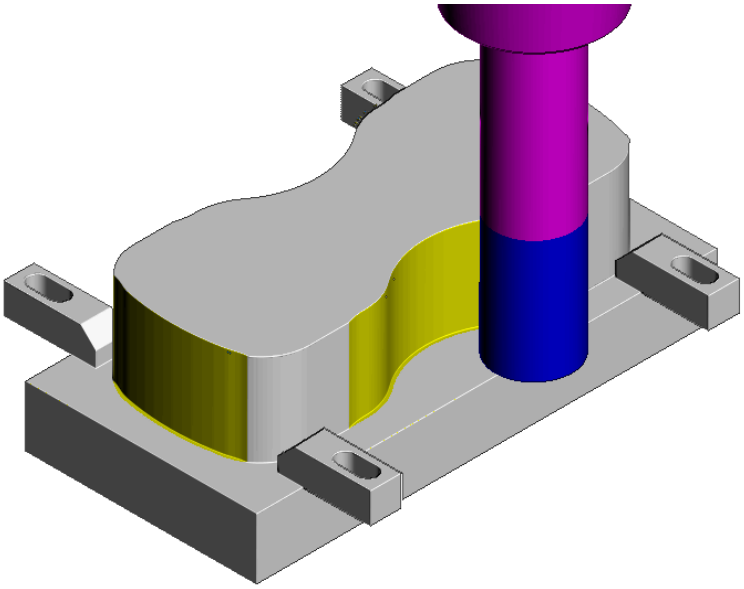

The tool is no longer crashing through the clamp positions.

27 Select **File** - **Save** to update the stored **Project**.

Copyright © Delcam Ltd

13. NC Programs

Introduction

Once a series of **toolpaths** have been generated their names can be listed in an **NC Program** file to be post processed as an output file for a specific **NC machine control**. Any number of **toolpaths** can be included and reordered as required depending on the limitations of the particular **NC machine** along with the associated post processor.

If the **NC machine** has a tool change facility then **toolpaths** created with different cutter sizes can be included in the same **NC Program**.

If the **NC machine** does not have a tool change facility then only **toolpaths** created with the same cutter can be included in the same **NC Program**.

1 Select **File > Delete All** and **Tools > Reset Forms**.

2 **Open** the 'read only' **Project**:

.....\PowerMILL_Data\Projects\NCProgram-Start

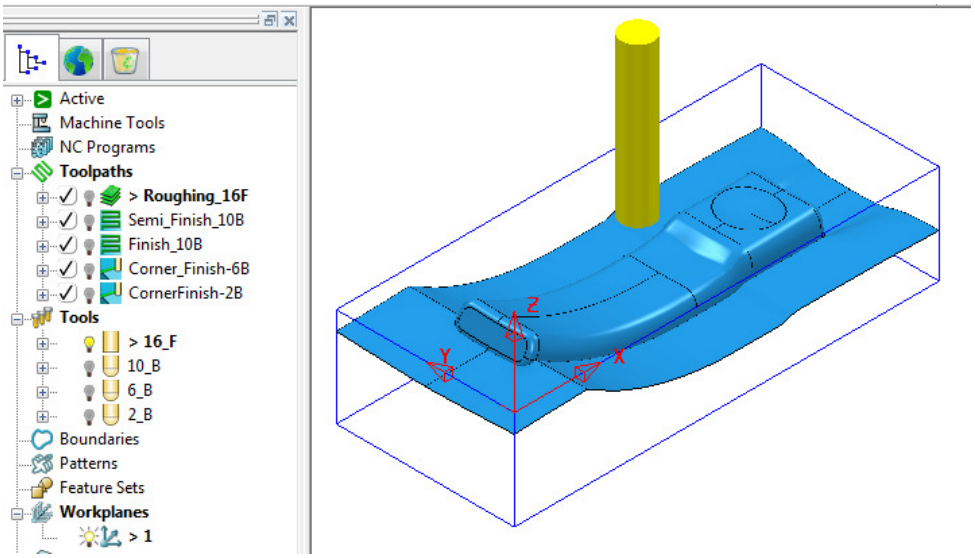

3 Select **File > Save Project As**:-

.....\COURSEWORK\PowerMILL-Projects\NCProgram-ex1

Defined PowerMILL Paths – NC Program output

4 From the top pulldown menu bar, select **Tools > Customise Paths**.

5 In the **PowerMILL Paths** dialog, select **NC Program Output** followed by **Add path to top of list** .

If not already defined, it is now required to set up a path to where the ***Post Processed*** files (**NCPrograms**) are to be stored.

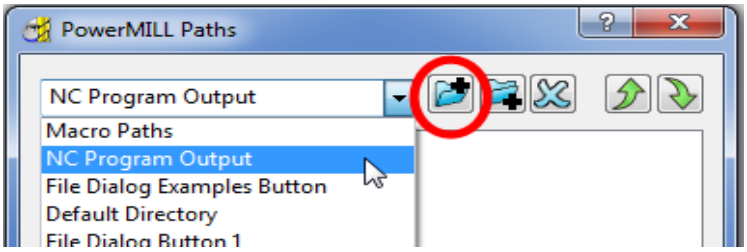

6 In the **PowerMILL Paths** dialog, Select ***NC Program Output*** and (if it is not already displayed) add the new path **C:\Temp\NCPrograms**.

*If this method is used the destination folder for **NCPrograms** must exist on your pc otherwise it will not be possible to output the **NCProgram** files.*

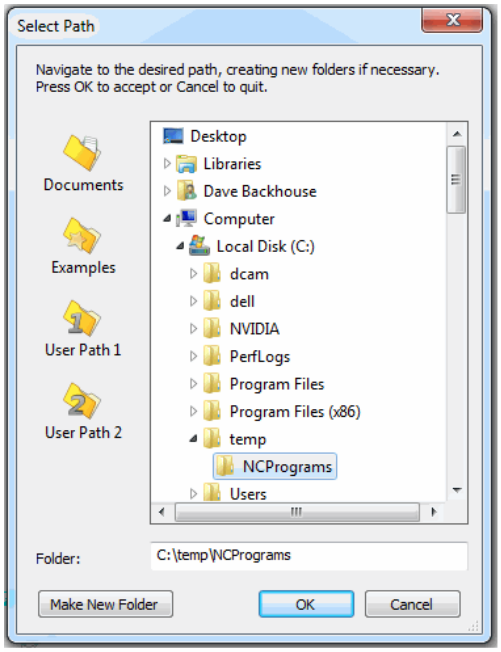

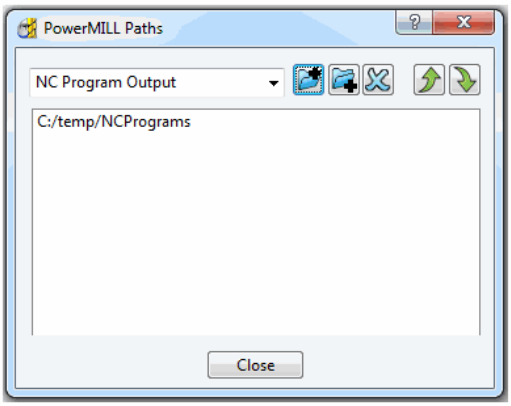

7 Click **OK** to accept and close the above dialog**.**

8 Close the **PowerMILL Paths** dialogue.

 Copyright © Delcam Ltd

Use Project On - NC Program output

An alternative method to control the destination for **NCdata** output is to use the ***active*** **Project** as the default, destination for outputting **NC Data** files. In the **NCPrograms - Preferences** form, switch ***Use Project*** to **ON**.

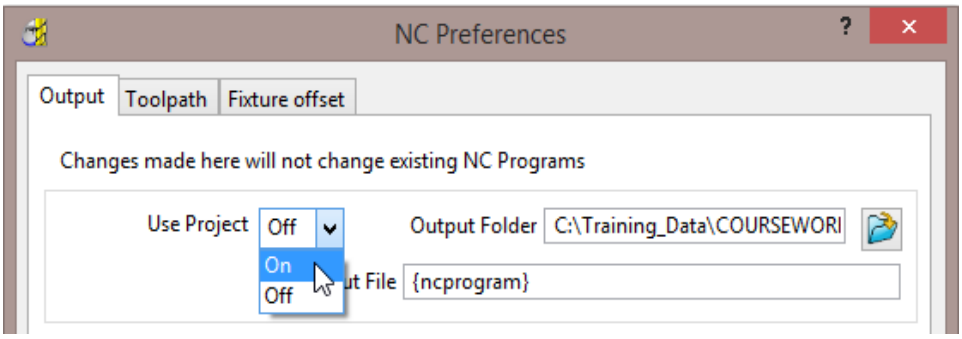

On applying the **Write** command on an ***NC Program*** a folder named **NC Programs** will be created in the currently active **Project** folder. This will not work if a **PowerMILL Project** has not yet been created (**Save Project**).

Setting the NC Preferences

1 In the **PowerMILL *explorer***, right-click **NC Programs** and select **Preferences**.

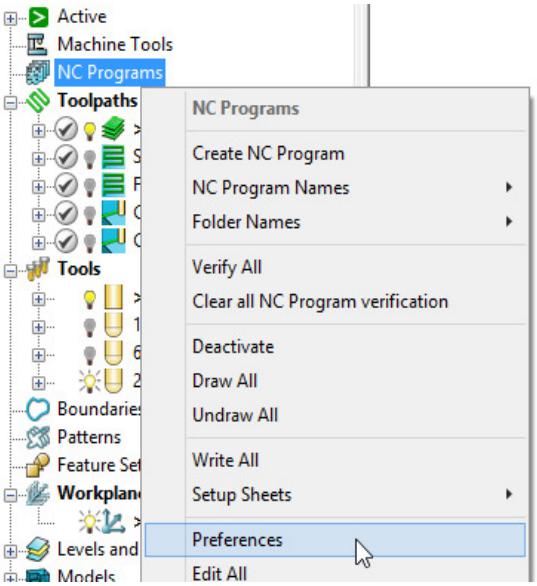

2 In the **NC Preferences** dialog, select the folder icon to access the machine tool, **Option File** list.

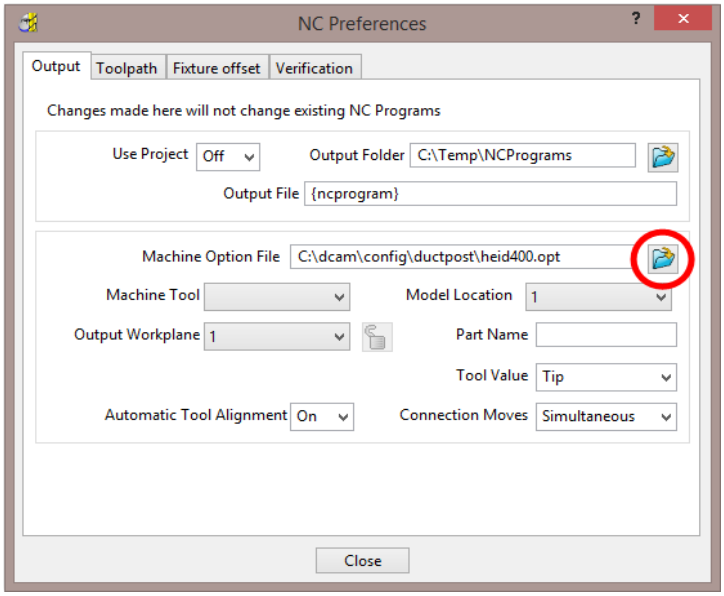

3 From the ***Select Machine Option Filename*** dialog (below), select the **heid426.opt** and click the **Open** tab.

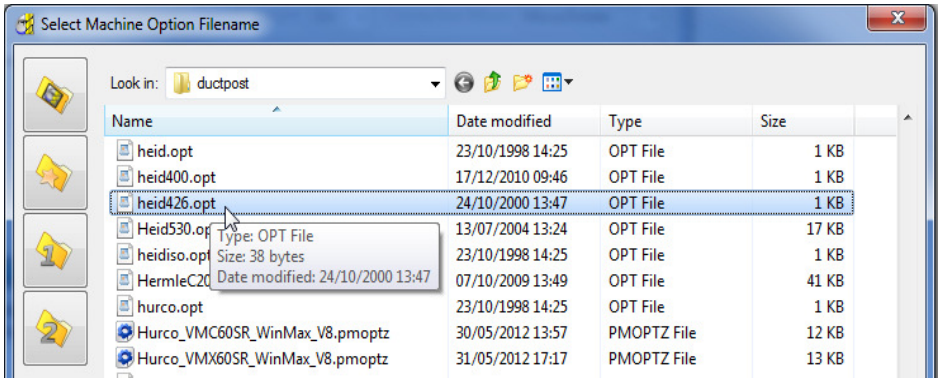

The selected option file translates the output to the correct Machine Tool output format.

*It is not unknown to have more than one **Option File** for the same machine tool to allow for different operational requirements.*

4 Click **Accept** on the **NC Preferences** dialog.

Creating the NC Program

1 In the **PowerMILL *explorer***, right-click on **NC Program** and from the local menu, select **Create NC Program**.

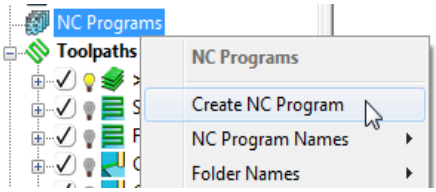

 Copyright © Delcam Ltd

2 Enter the name **Job_646_Top** and click **Accept**.

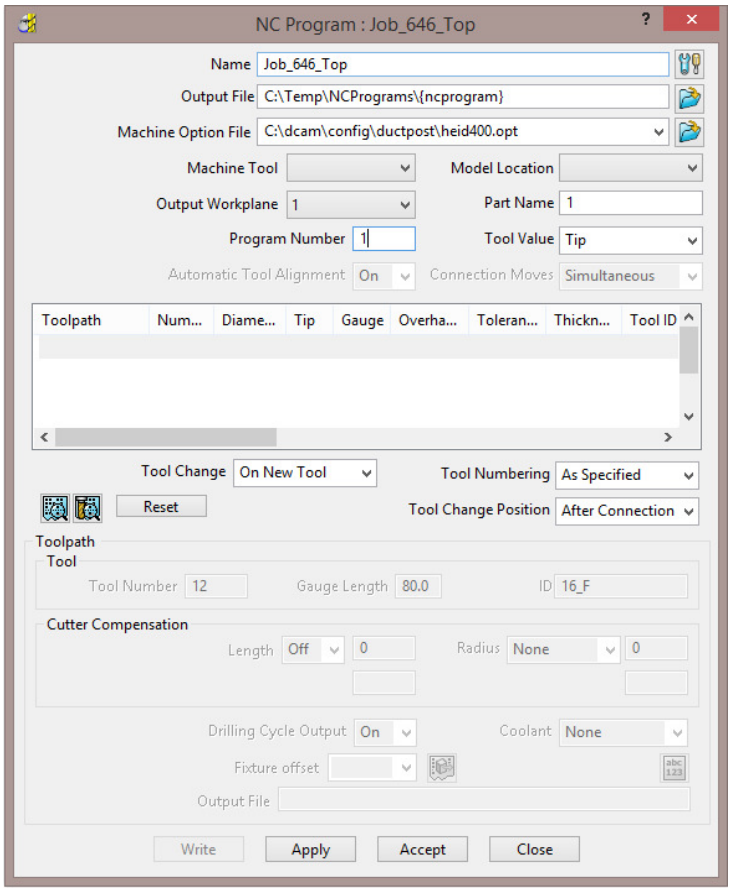

3 In the **PowerMILL *explorer*** select the **+/-** box by **NC Programs** to toggle the display of the existing **NCPrograms**.

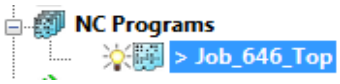

One or more **Toolpaths** can be added to the active, ***NC Program***.

4 Select the **Area Clearance** icon with the left mouse button and keeping it held down drag the mouse to the right (The cursor will display ghosted icons).

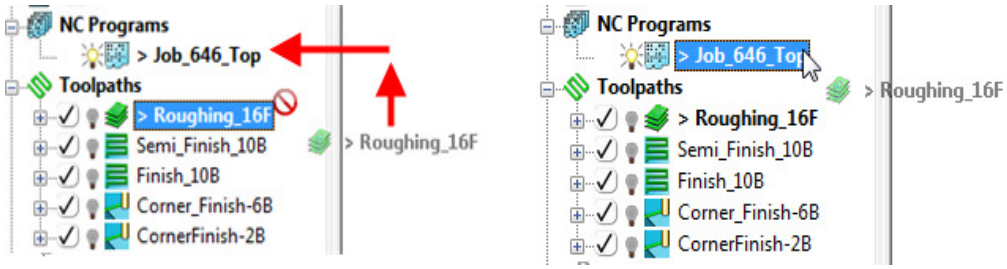

5 Continue to drag the toolpath onto the active **NC Program**, **Job_646_Top** and release the mouse button. In the **PowerMILL *explorer***, **NC Programs** area select the +/- box by **Job_646_Top** to toggle a display of the contents (**Roughing_16**).

6 Drag the other toolpaths into the last file in the active **NC program** area to maintain the required machining order.

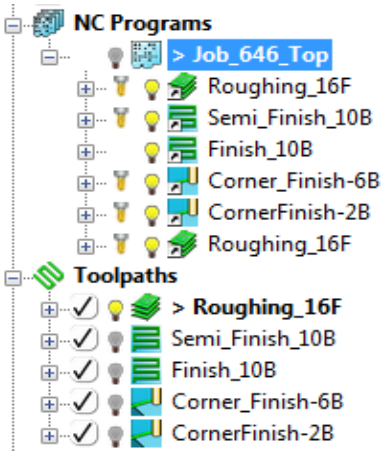

Add to – NC Program (alternative method)

It is also possible to add several toolpaths to the active **NC Program**. In the ***PowerMILL* explorer**, select one or more **toolpaths** and then *Right Mouse Click* on one to open the local ***Toolpaths*** menu.

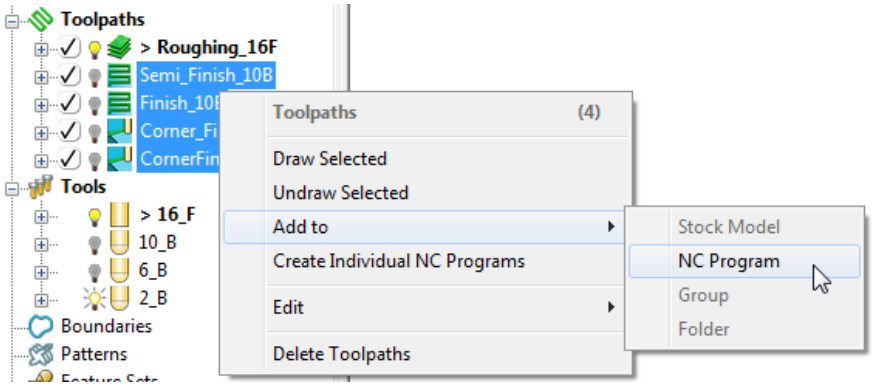

Select **Add to** – **NC Program** and all of the selected toolpaths will be added to the **NC Program** list.

7 Right-click on any of the toolpaths in the current **NC Program** to access the local **Toolpath** options, but do not apply any of the options at this stage.

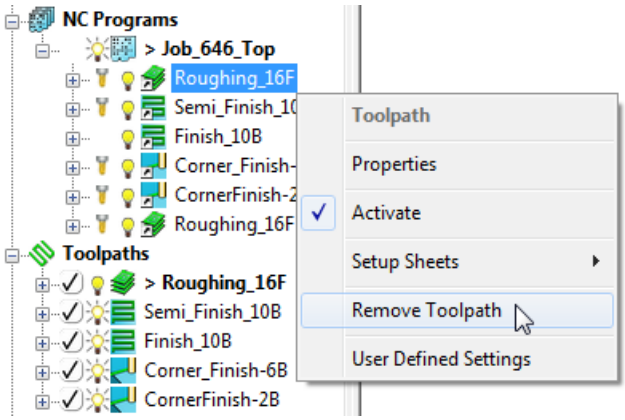

 Copyright © Delcam Ltd

8 Right-click on the **NC Program** (**Job_646_top**) and select **Settings**.

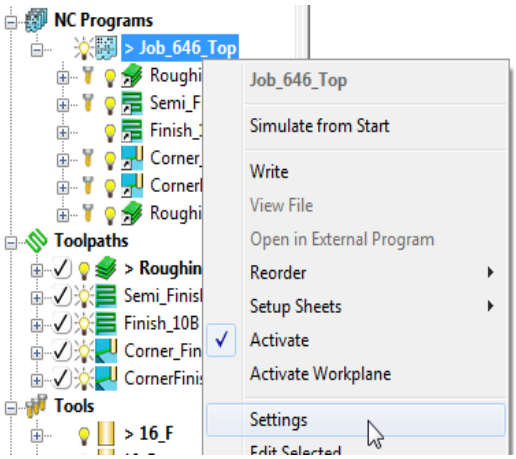

*You can open (and edit) the **NC Program** form current by selecting **Settings** from the local right click menu.*

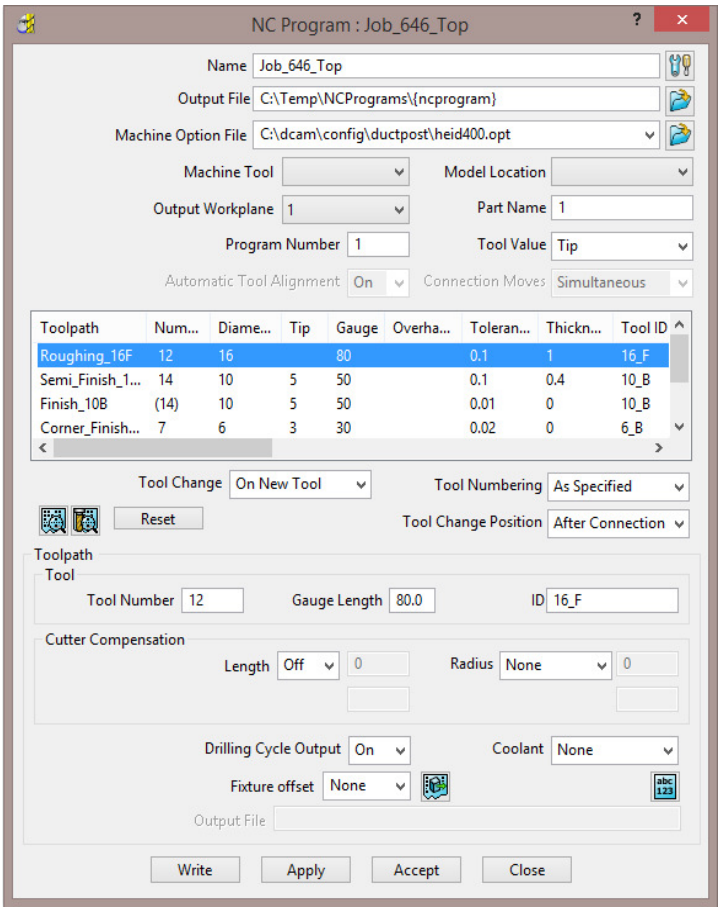

*Several of the settings assigned to a specific toolpath can be changed in the above dialog. The toolpath row is selected and relevant values (Tool Number, Coolant, etc) are then modified before clicking **Apply**. These local edits do not affect the original toolpath.*

9 Click **Accept**.

10 Right-click on the **NC Program**, **Job_646_Top** and select **Write** to create the Post-Processed output file.

During the translation an **Information** window appears containing a progress report.

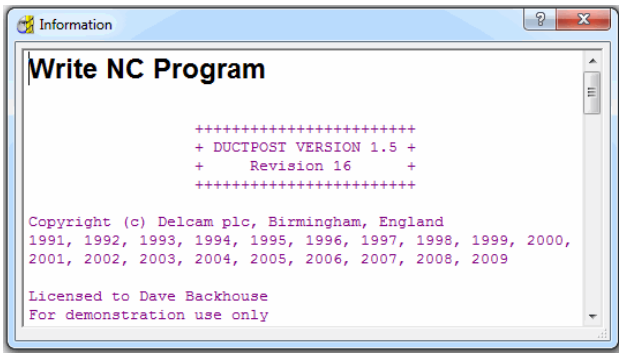

Newly created **Toolpaths** are automatically added to the ***Active* NC program**. It can be useful to **Create** and **Activate** an **NC Program** prior to toolpath creation to save having to drag them in later as a separate operation.

11 De-activate the ***NC Program***, **Job_646_Top** in the **PowerMILL *explorer***.

12 **Activate** the existing Dia **10** Ball nose tool named **10_B**.

13 **Calculate** a **3D Offset Finishing** toolpath, named **3Doffset-test1** using the settings and values as shown below.

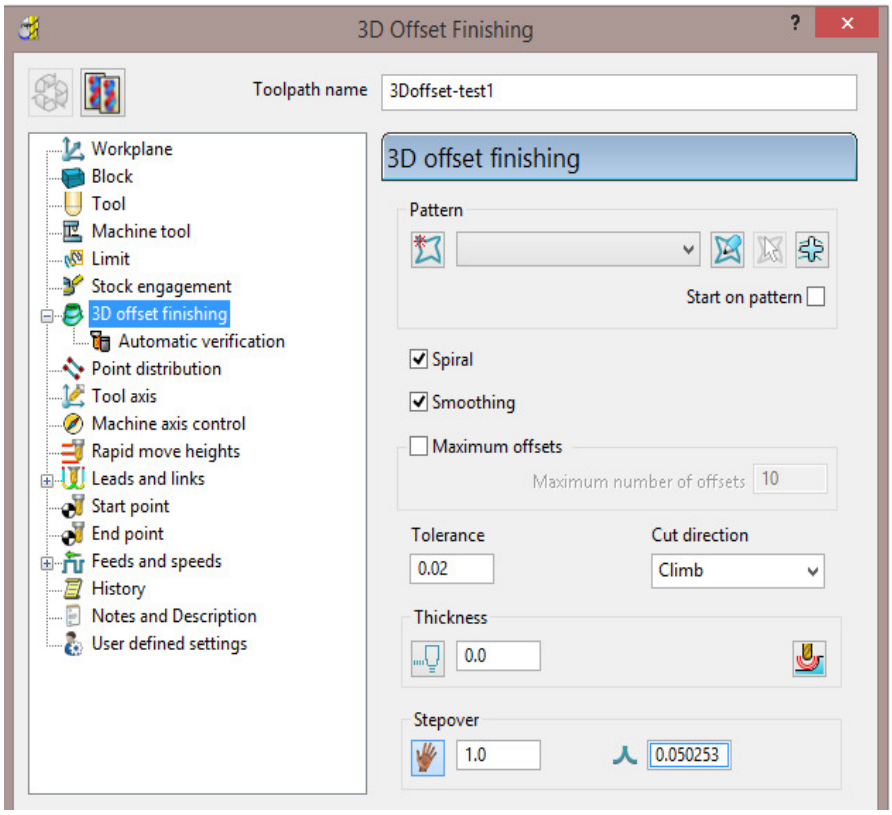

 Copyright © Delcam Ltd

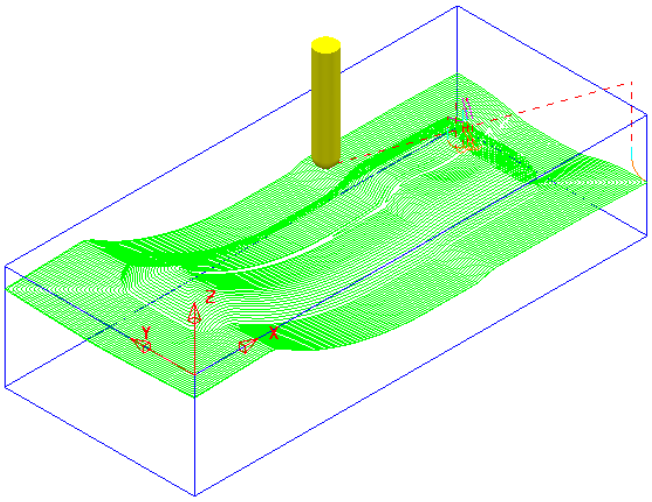

*It is not always required to output all **toolpaths** in one **NC Program**. As a result it is possible to create an **NC Program** directly from an individual **toolpath** entity.*

14 Right-click on the **toolpath** named **3Doffset-test1** and select **Create Individual NC Programs**.

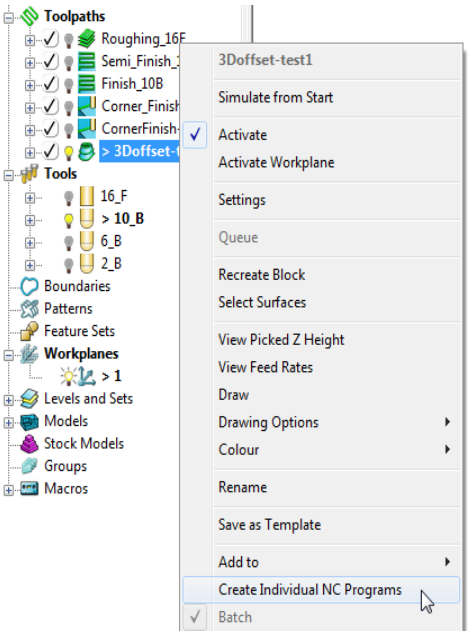

15 A new ***NC Program*** is created. Select the **+** symbol to the left of ***NC Program* 1** to access its contents (the **+** symbol will change to a **-** symbol).

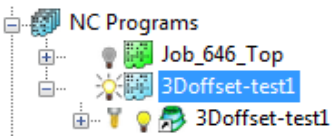

*The **NCProgram** icon for **3Doffset-test1** will remain blue until the output file is processed (**Write**). The icon will then turn to green.*

Viewing the NC-Data output

Once Post-processed, the **NC Data** output file can be viewed directly from the local menu.

- Right-click on the ***NC Program***, **Job_646_top** and from the local menu, select **View File**.

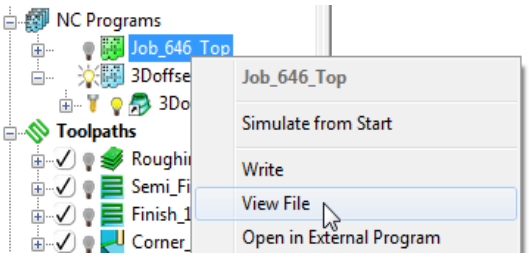

An **Information** dialog will open to enable the user to view (but not edit) the contents of the NC Data output file.

Manually Editing the NC-Data output

If the user needs to edit the code manually, then the NC-Data output file will have to be edited in Wordpad.

1. From **Windows Explorer**, browse to **C:\temp\NCPrograms** to where the **NC-Data** files are downloaded.

2. Right-click on one of the **NC-Data** files and from the local menu, select **Open With > Wordpad**.

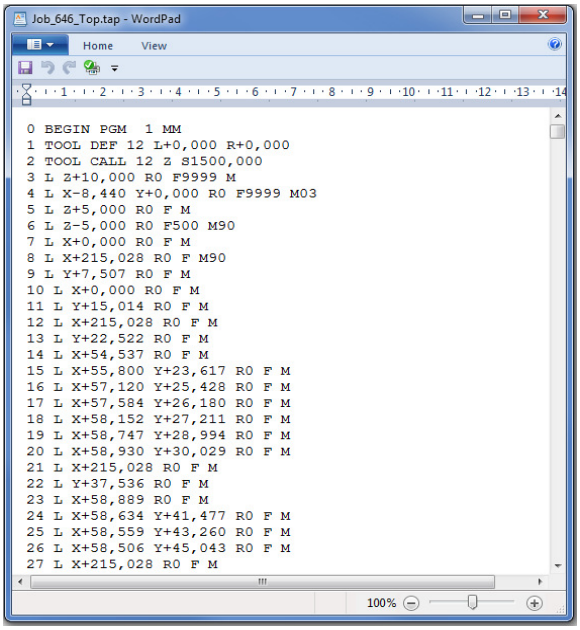

3. From the **main** (top) toolbar select **File > Save** to update the **Project** followed by **Close**.

Copyright © Delcam Ltd

14. Setup Sheets

Introduction

All the Setup data required from a ***PowerMILL*** **Project** such as ***cutter definitions***, ***images*** and ***information*** relating to **toolpaths** can be downloaded as **HTML files** and then printed out as required. This is essential for the CNC Operators who will be running the programs.

1 Select **Delete > All** and **Tools > Reset forms**.

2 **Open** the **Project**:

.....\PowerMILL_Data\Projects\SetupSheet-Start

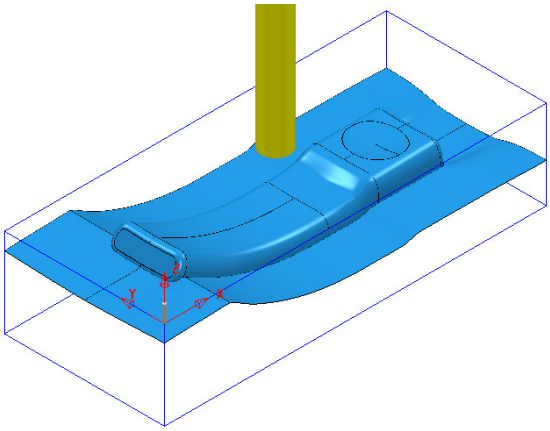

3 Select **Save Project As**:

.....\COURSEWORK\PowerMILL_Projects\SetupSheet-ex1

4 From the **main** pulldown menus select **Tools > Options > Setup Sheets > Setup Sheets**, and **tick** the box **Load Setup Sheets with Project**.

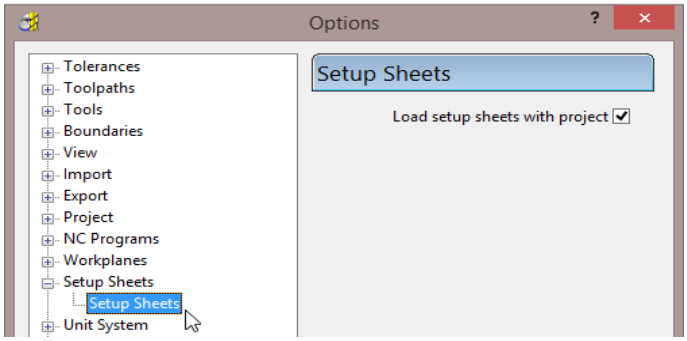

5 **Accept** the form.

6 From the main pulldown menus select **File – Project Settings** to open the following dialogue.

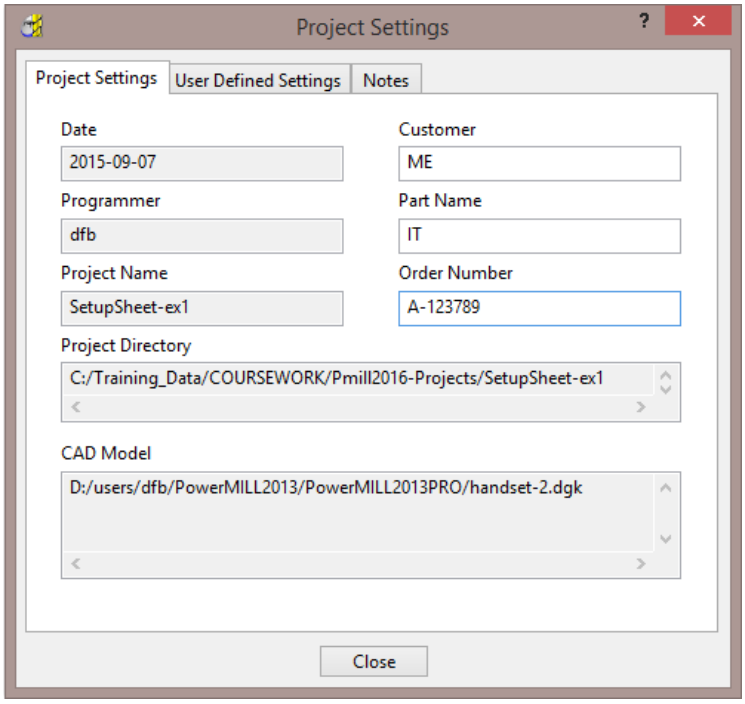

7 Input **Customer**, **Part Name**, and **Order Number** details as shown above and then **Close** the dialogue.

*There are 2 other tabs for the user to input additional information as **User Defined Settings** and **Project Notes**.*

8 **Activate** one of the toolpaths to reinstate the original setup (Block, Workplane, Rapid Move Heights, etc).

9 Ensure that no **tools** or **toolpaths** are visible and only the **shaded model** and ***wireframe* Block** (minimum **Opacity**) are displayed in an **ISO 1** view.

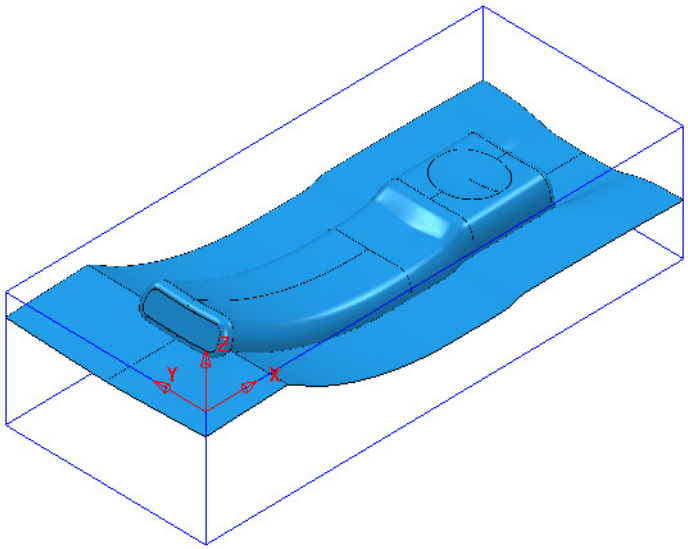

 Copyright © Delcam Ltd

10 Right-click on the ***NC Program*** named **MC-All** and from the local menu select **Setup Sheets > Project Snapshot > Current View**.

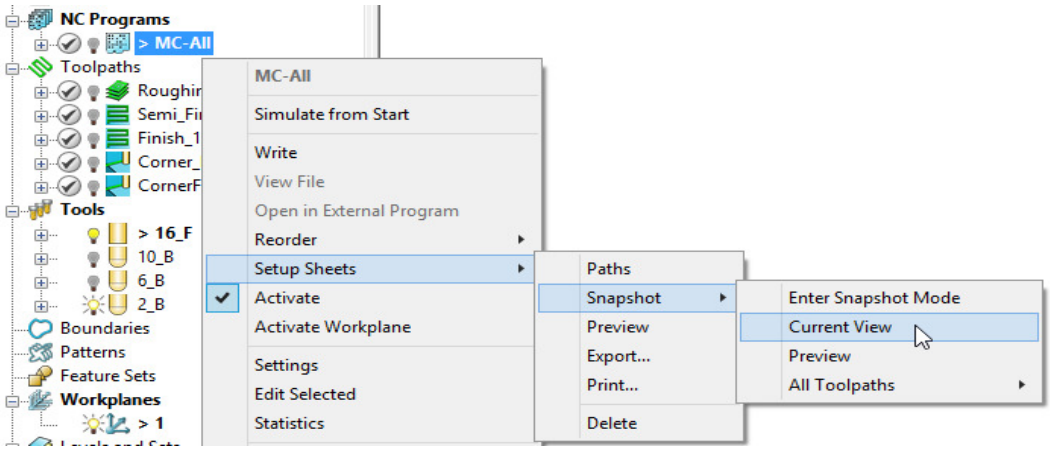

An image of the model has now been captured and will be automatically used on the front page of the setup sheet.

11 Undraw the **model** leaving the **Workplane** and ***wireframe*** **Block** as the only displayed items.

12 Right-click on the **NC Program** - **MC-All** again and select **Setup Sheets > Snapshot > All Toolpaths > Iso View**.

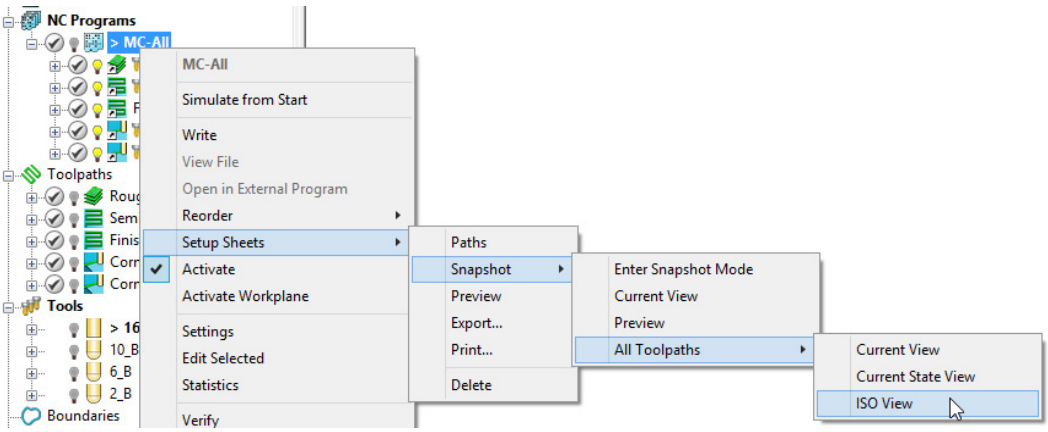

Images of all the **toolpaths** in the selected **NC program** have now been captured.

Each **toolpath** will have a separate page on the **Setup Sheet**.

13 Right-click on the **NC Program** - **MC-All** again and select **Setup Sheets - Preview**.

This action will create the **Setup Sheet**, **HTML** files.

The **PowerMILL Setup Sheets: Index** is displayed on the left side of the screen.

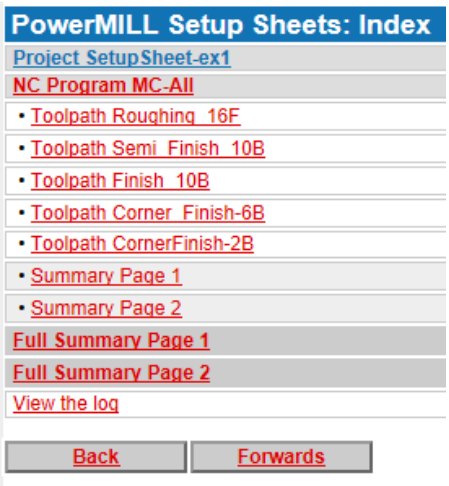

14 In the above ***Index*** dialog left click on **Project Setup Sheet-ex1** to display the following sheet.

Once a page has been selected the text will change from red to blue.

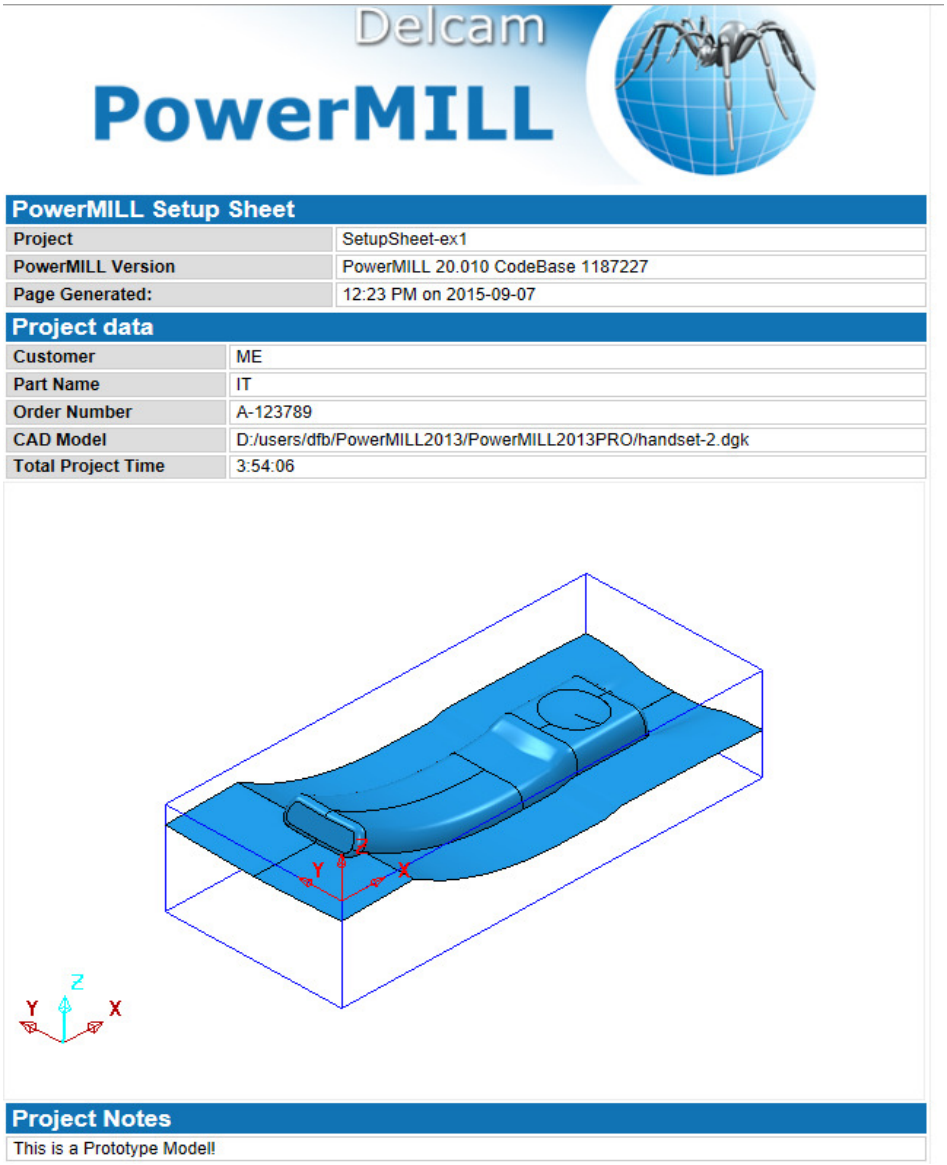

 Copyright © Delcam Ltd

15 From the **Index** page select the **Toolpath** and **Summary** pages in turn and view the content.

Delcam PowerMILL

PowerMILL Setup Sheet

Project	SetupSheet-ex1
NC Program	MC-All
PowerMILL Version	PowerMILL 20.010 CodeBase 1187227
Page Generated:	12:23 PM on 2015-09-07
Order Number	A-123789
CAD Model	D:/users/dfb/PowerMILL2013/PowerMILL2013PRO/handset-2.dgk

Toolpath Limits

	X	Y	Z
Start Point	107.514	45.043	10
Minimum	-11.258	-10.544	-31
Maximum	226.375	101.331	10

Tool

Name	16_F
Number	12
Type	End Mill
Diameter	16
Tip radius	0
Length	80

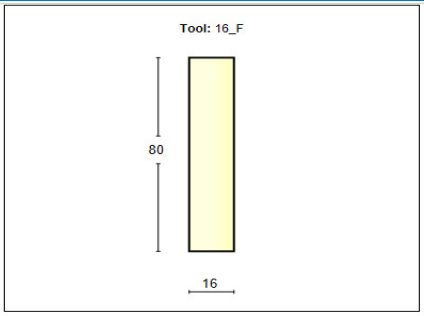

Toolpath Notes

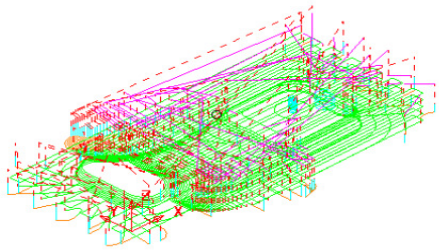

Toolpath Limits

	X	Y	Z
Start Point	107.514	45.043	10
Minimum	-11.258	-10.544	-31
Maximum	226.375	101.331	10

Tool

Name	16_F
Number	12
Type	End Mill
Diameter	16
Tip radius	0
Length	80

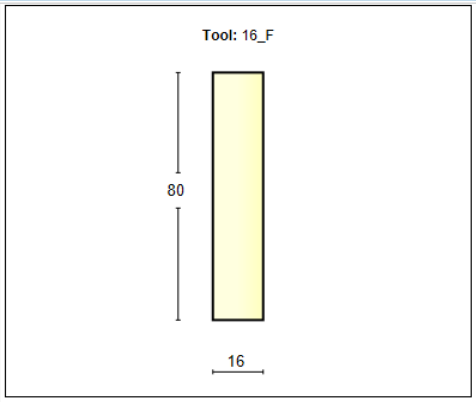

Toolpath Notes

*Each HTML page can be printed out as individual items. Right-click on the page and from the local menu, select **Print Picture**.*

The 1st sheet of the **Summary Page** is as shown below.

Delcam PowerMILL

PowerMILL Setup Sheet

Project	SetupSheet-ex1
PowerMILL Version	PowerMILL 20.010 CodeBase 1187227
Page Generated:	12:23 PM on 2015-09-07

Summary sheet 1 of 2

Toolpath / TAP File	NC Program	Strategy	Tool	
Roughing_16F C:/Temp/NCPrograms/MC-All.h	MC-All	Raster Area Clearance	Type	End Mill
			Diameter	16
			Tip radius	0
			Length	80
			Number	12
Semi_Finish_10B C:/Temp/NCPrograms/MC-All.h	MC-All	Raster	Type	Ball Nosed
			Diameter	10
			Tip radius	5
			Length	50
			Number	14
Finish_10B C:/Temp/NCPrograms/MC-All.h	MC-All	Raster	Type	Ball Nosed
			Diameter	10
			Tip radius	5
			Length	50
			Number	(14)
Corner_Finish-6B C:/Temp/NCPrograms/MC-All.h	MC-All	Along Corner	Type	Ball Nosed
			Diameter	6
			Tip radius	3
			Length	30
			Number	7

16 Return to the display to show the **PowerMILL *explorer*** again.

17 Right-click on the **NC Program** - **MC-All** and select **Setup Sheets > Export**.

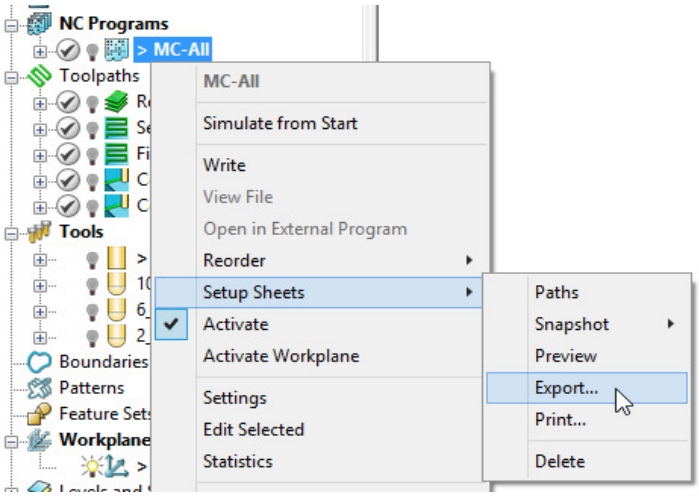

Export stores all the Setup Sheets as HTML documents into the current Project Folder.

Setup Sheets can be printed internally from PowerMILL or externally from the Exported HTML documents.

 Copyright © Delcam Ltd

Customising Setup Sheets

By editing the **HTML** templates it is possible to customise the output of the **Setup Sheets**.

The use of **HTML** editing software is the recommended method to implement changes to the **Setup Sheet** output. There are free downloads available from the web. **Microsoft Word** can also be used but this can give unpredictable results.

Always create a copy of the template document so that the original is still available if things go wrong.

In the following example an alternative template will be substituted into the **Setup Sheet Toolpath Template** search paths.

1 Right-click on the **NC Program** named **MC-All** and select the option **Setup Sheets** > **Paths**.

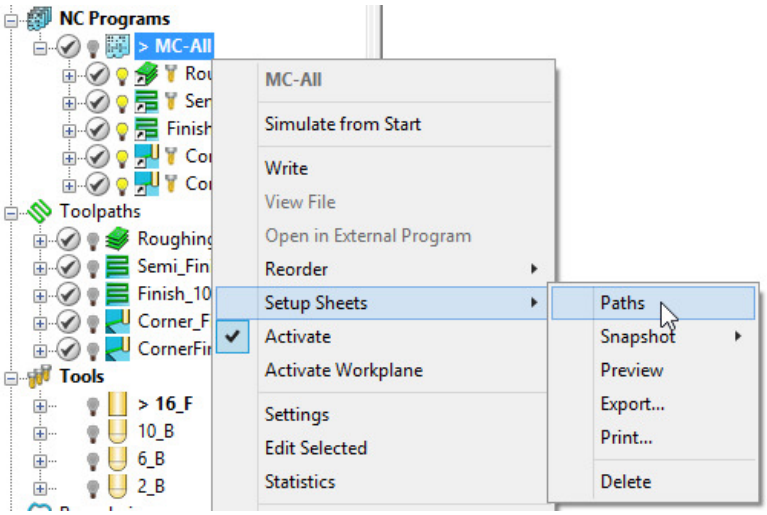

2 On the **Paths** tab select the folder icon in the **Toolpath** > **Write** field.

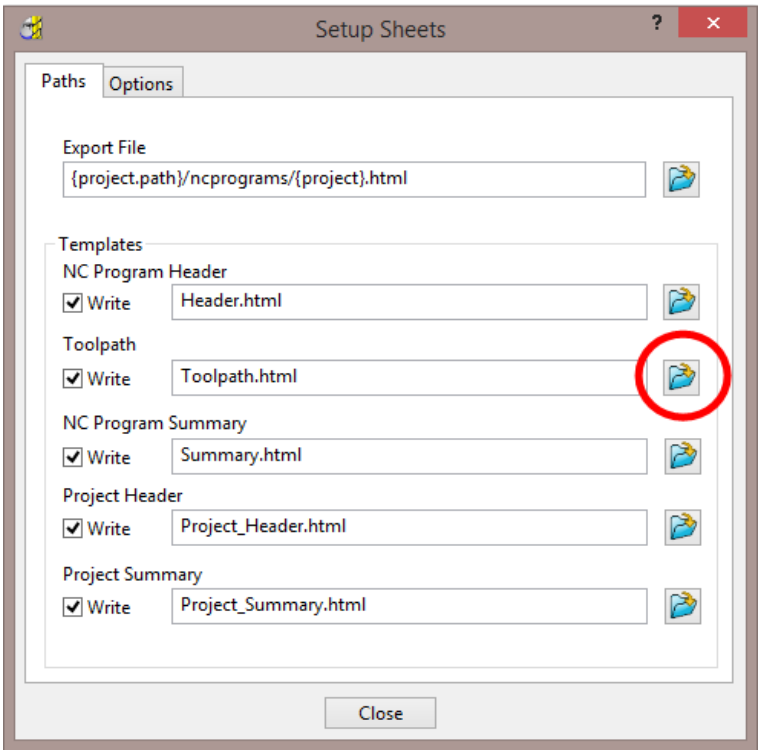

3 Browse to **.....\PowerMILL_Data\setup-sheets** and **Open** the **Toolpath2.html** file (customised template).

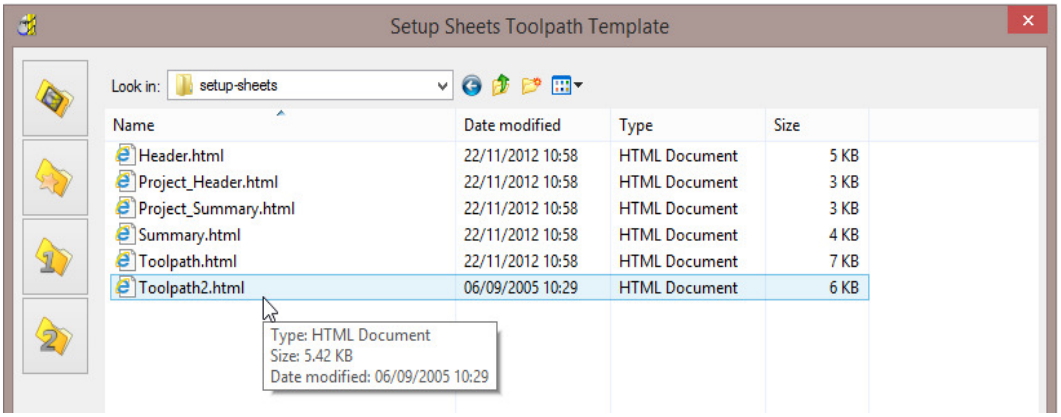

4 Click **Close** on the **Setup Sheets** dialog.

5 Right-click on the **NC Program** named **MC-All** select the option, **Setup Sheets** > **Preview** and re-run the **Setup Sheets** using the new template.

6 On the **Index** page select the new page for the toolpath **Roughing_16F** (Shown below)

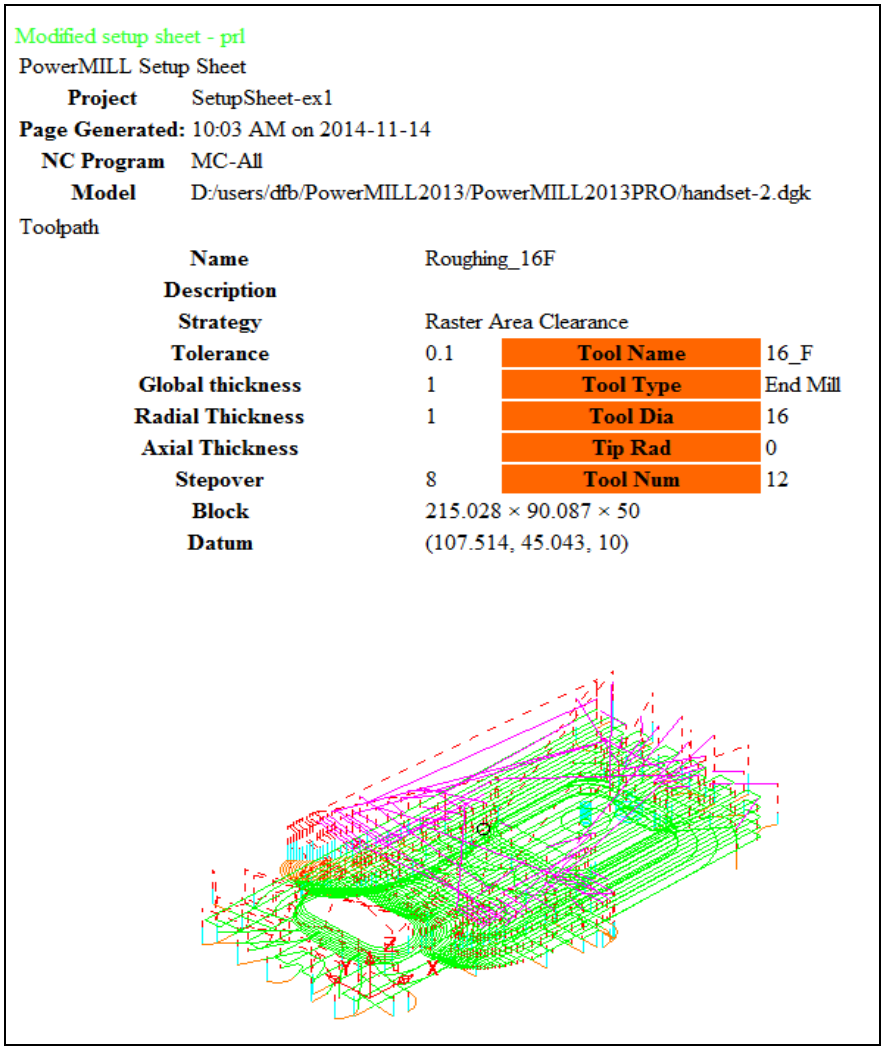

Modified setup sheet - prl

PowerMILL Setup Sheet

Project SetupSheet-ex1

Page Generated: 10:03 AM on 2014-11-14

NC Program MC-All

Model D:/users/dfb/PowerMILL2013/PowerMILL2013PRO/handset-2.dgk

Toolpath

Name	Roughing_16F		
Description			
Strategy	Raster Area Clearance		
Tolerance	0.1	**Tool Name**	16_F
Global thickness	1	**Tool Type**	End Mill
Radial Thickness	1	**Tool Dia**	16
Axial Thickness		**Tip Rad**	0
Stepover	8	**Tool Num**	12
Block	215.028 × 90.087 × 50		
Datum	(107.514, 45.043, 10)		

Copyright © Delcam Ltd

15. Specialist Finishing

Projection Machining.

Projection Finishing provides greater control of the projection direction of machining strategies onto a component. Applications include the machining of undercut features using specialist tooling and a more accurate finish for features positioned at complex angles to the tool axis. **Projection Finishing** also provides essential strategies for use with **Five Axis** tool alignment applications.

There are five different strategies **Point**, **Line**, **Plane**, **Curve**, and **Surface Projection**.

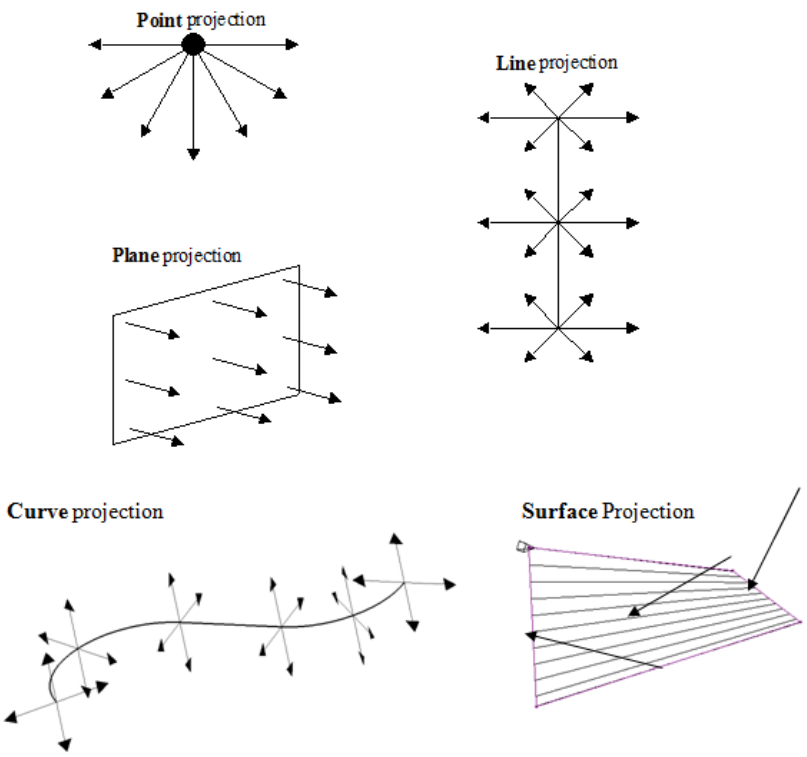

The simplest way to understand the principle of projection machining is to regard the first four strategies comparable to beams of light radiating into or away from a defined source (Only the areas visible to the theoretical light source will be machined).

- A **Point** strategy is similar to light radiating from a single light bulb.
- A **Plane** strategy is similar to light radiating from a rectangular floodlight.
- A **Line** strategy is similar to light radiating from a fluorescent tube.

- A **Curve** projection strategy is similar to light radiating from a curved neon tube.
- A **Surface** projection projects the tool ***Inwards*** or ***Outwards*** along the normals of a selected surface.

In the **Finishing** dialog, the projection **Direction** can be toggled between **Outwards** and **Inwards** from the user defined plane.

In the **Projection Finishing** forms, angular definitions are input using **Azimuth** and **Elevation**. By using a combination of the two any complex 3D angle can be defined.

- **Azimuth Angle**:- Starting from **+X = 0** this is the angle anticlockwise around the **Z** axis.

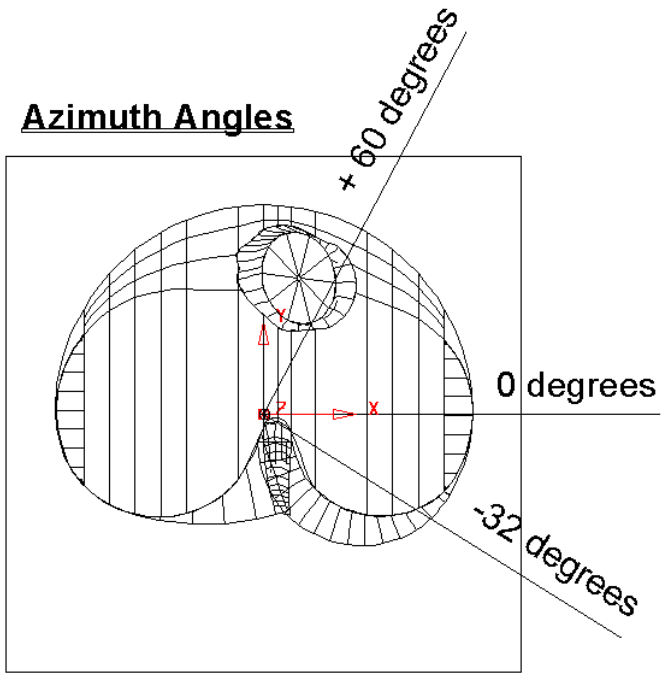

This is shown on the chamber model, with a view looking down the Z-axis.

- **Elevation Angle** - this is the upward angle from the **XY** plane

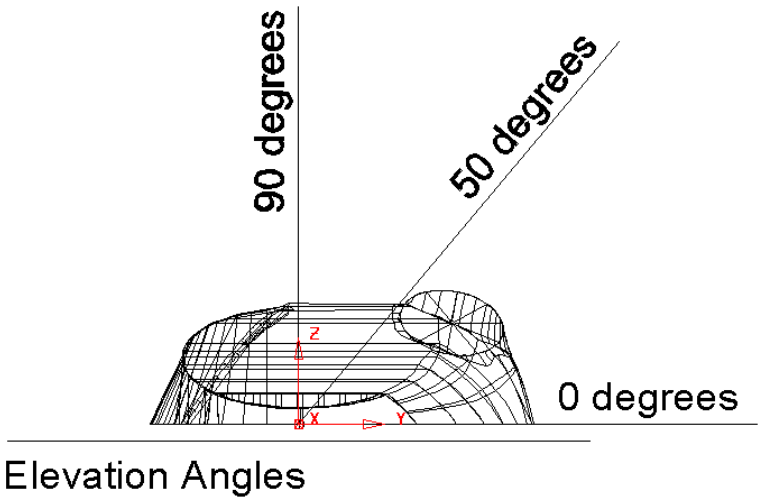

This is shown on the chamber model, with a view looking down the X-axis.

 Copyright © Delcam Ltd

Plane Projection Example

All five **Projection Finishing** strategies can be used to machine undercut features if used with suitable tooling such as Disc or Spherical. The following example shows an undercut application using the **Plane Projection** strategy.

1 Select **File - Delete All** and **Tools - Reset Forms**.

2 Select **File** > **Open Project**:

.....\PowerMILL_Data\Projects\Heatsink-Ucut2-Start

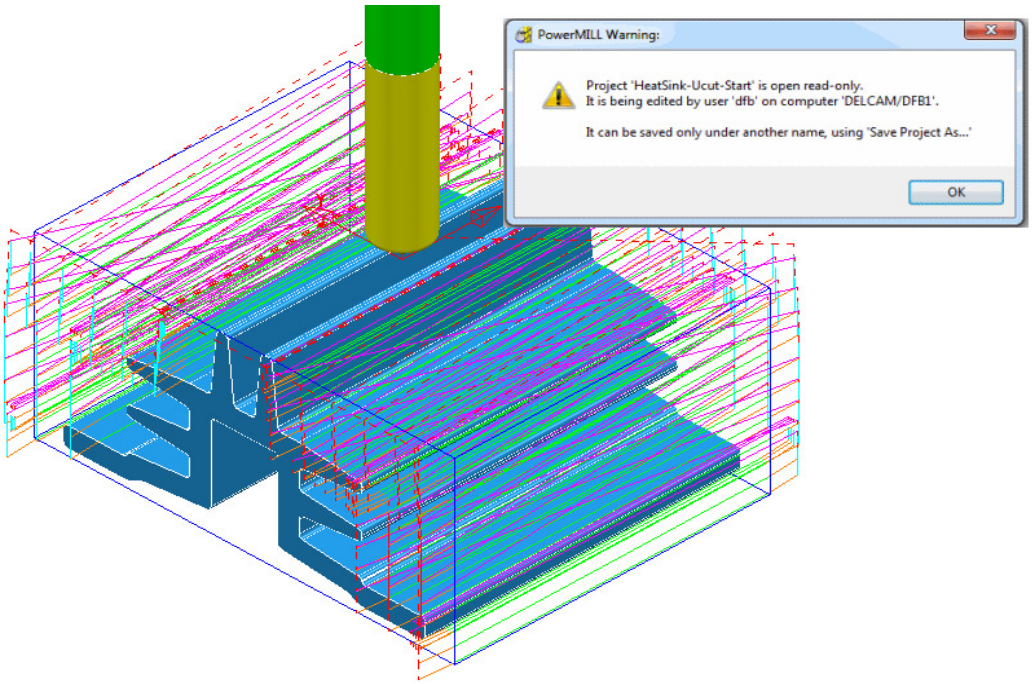

3 **Save** the **Project As**:

.....\COURSEWORK\PowerMILL_Projects\ Heatsink-Ucut2-EX1

4 Open the **Block** form and with **Defined by - Box** and **Type - Model** set select **Calculate**.

5 **Simulate** the **NCProgram** (all of the existing toolpaths) in **ViewMILL**.

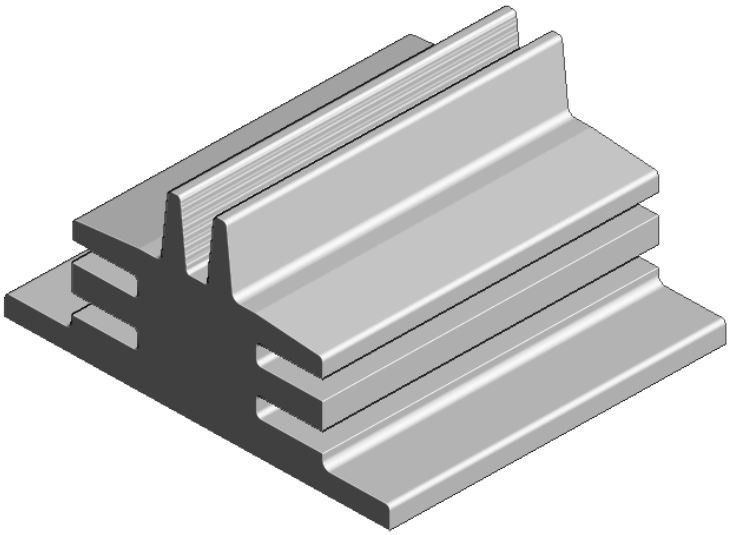

6 Return the **ViewMILL** simulation to the **No-Image** view .

7 Disconnect **ViewMILL** from the toolpath simulation .

8 **Activate** the **D75-H6-T2** Disc Cutter.

9 In the **Block** dialog ***lock*** all 4 of the **X** and **Z** values.

10 **Calculate** the **Y** values of the **Block** with an **Expansion** value of **40**.

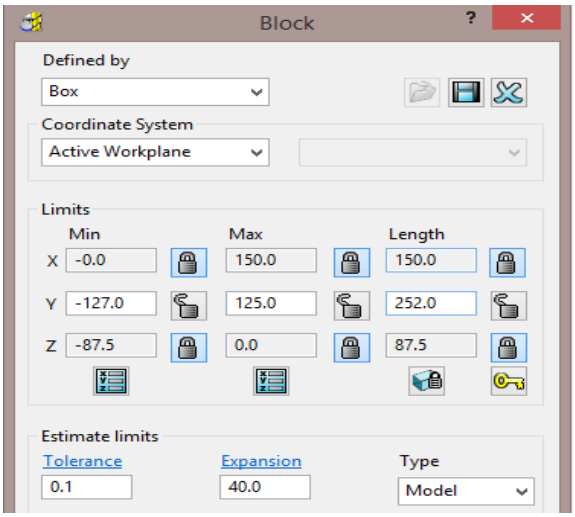

11 In the **Strategy Selector** - **Finishing** dialog, select **Projection Plane Finishing** and fill in the pages of the dialog exactly as shown below.

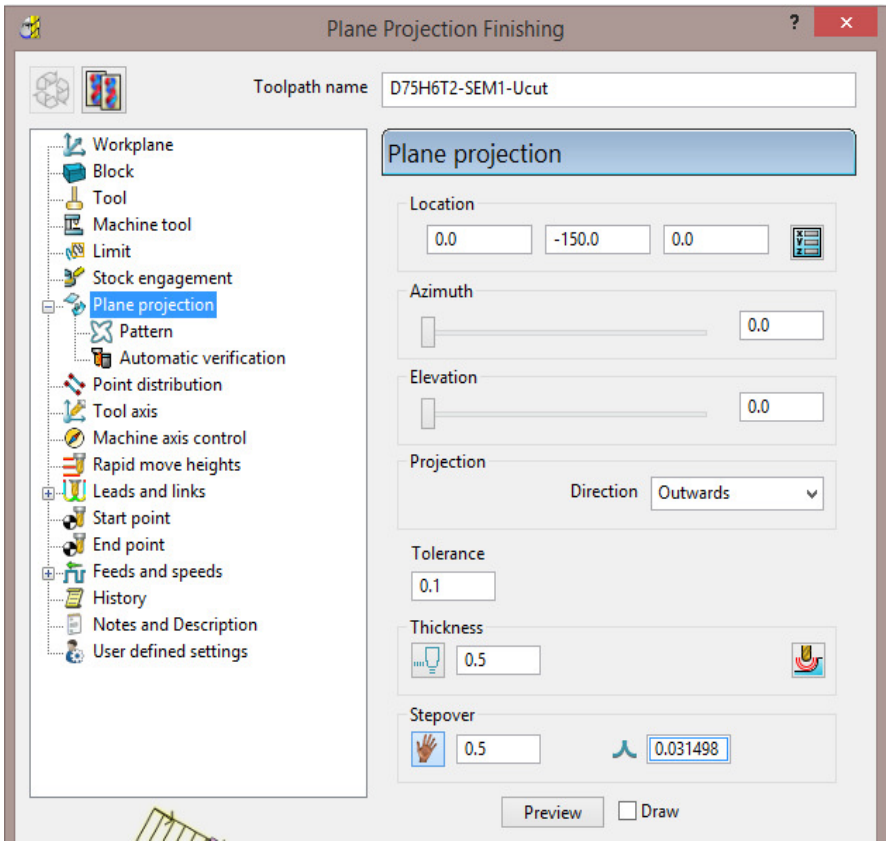

The **Location** is the local datum for the projection strategy. All other coordinates entered in the dialog are relative to this point.

 Copyright © Delcam Ltd

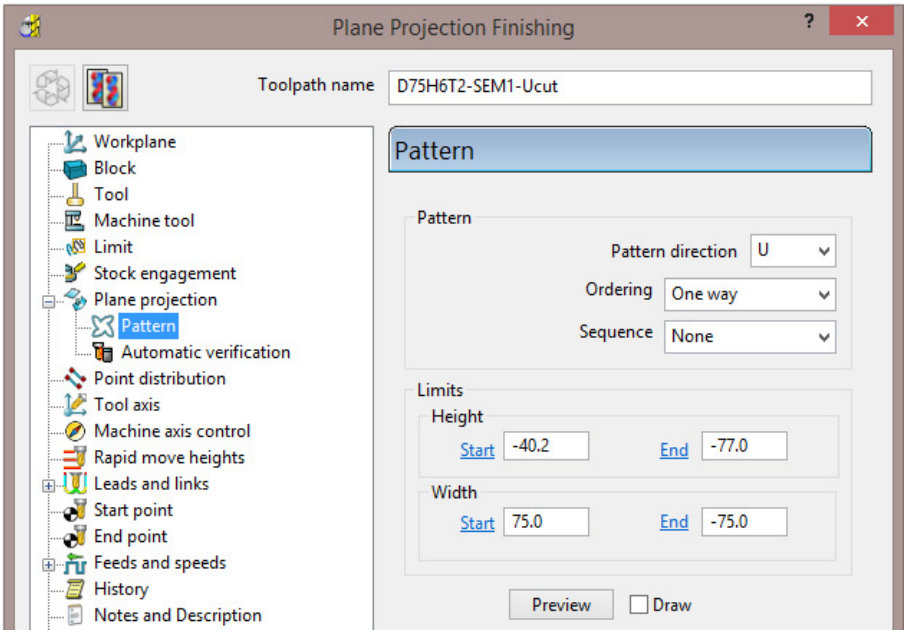

The values for the **Start** and **End** heights can be obtained by viewing the model in the **X** direction and using the cursor position to display **Z** values at the bottom right of the screen.

12 Select **Preview** to view the **Plane Projection** pattern.

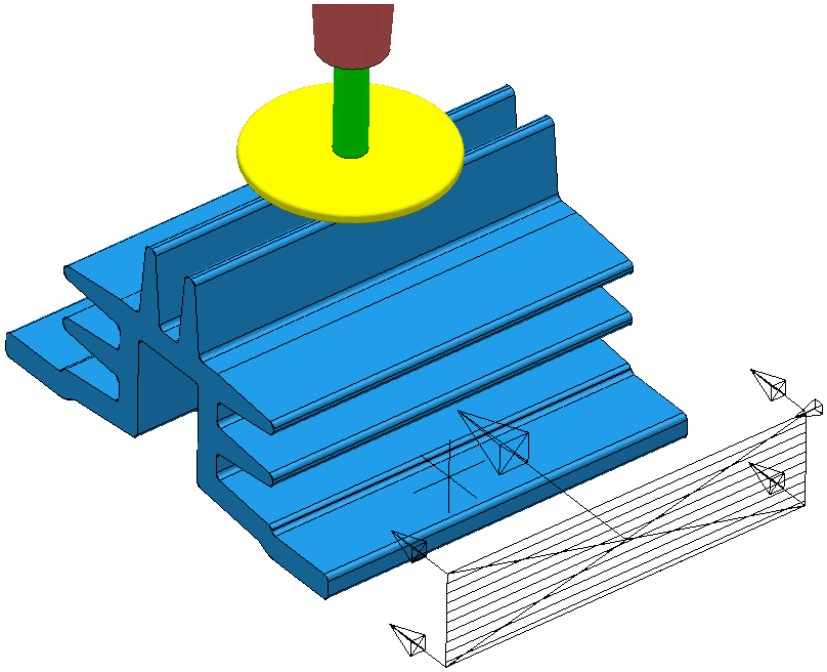

The **Projection Plane > Preview** is displayed as shown and the user can dynamically alter the view to visually check for potential adjustments.

When using projection finishing, (**Point**, **Line** or **Plane**), the **Anchor Point** must be positioned (along the projection direction) away from the model by at least the cutter radius.

13 Select **Calculate** to create the toolpath and then **Close** the dialog.

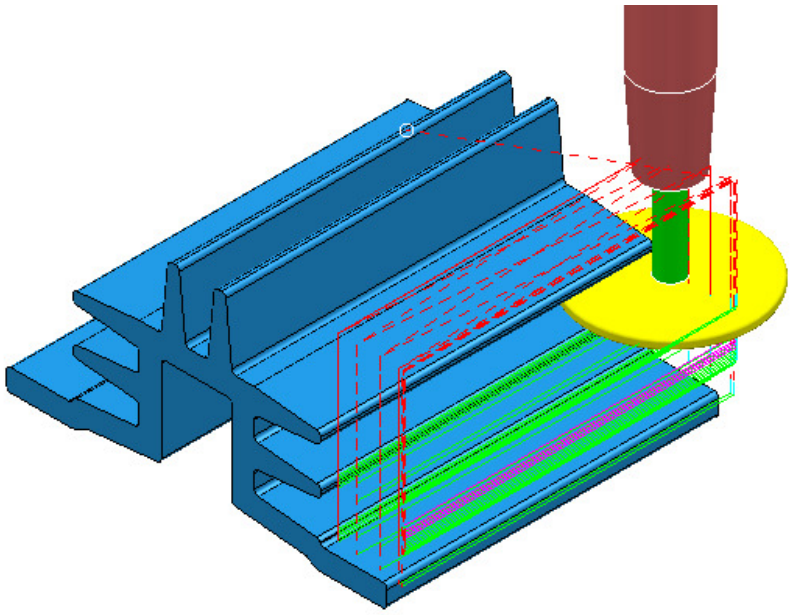

Observe that the tool is **gouging** through the fins when it retracts at the end of each pass. This is confirmed by the ***red*** toolpath, icon displaying an exclamation mark in the explorer.

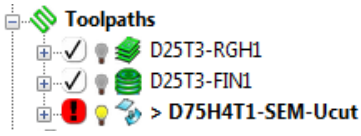

In this case suitable **Leads and Links** will be applied to easily rectify the problem.

1 Open the **Leads and Links** dialog and select the **Lead in** tab.

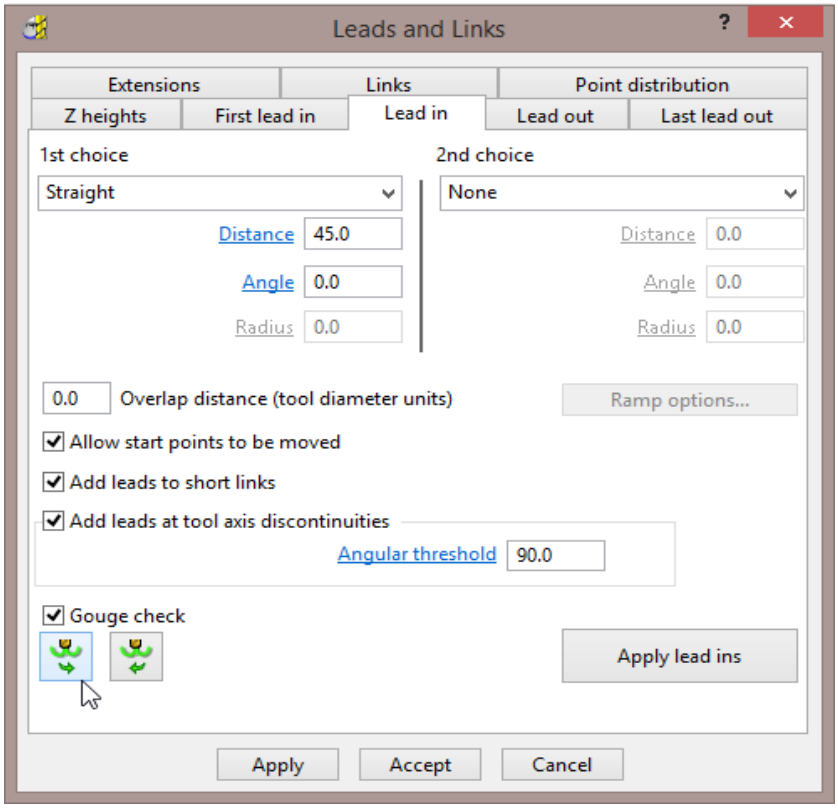

 Copyright © Delcam Ltd

2 Input the following in the **Lead in** page:

1st Choice - **Straight**

Distance 45

Angle 0

3 Select the **Lead Out the same as Lead in** tab.

4 **Apply** and **Accept** the dialog.

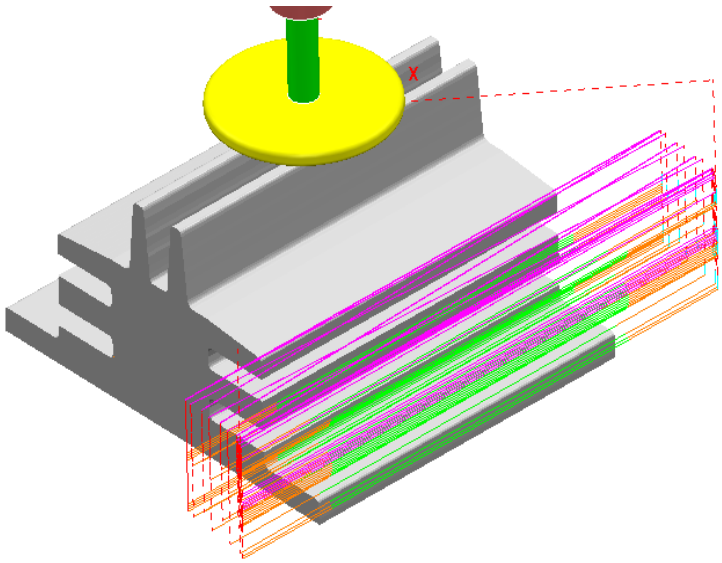

The toolpath **Lead** moves are now updated and the ***red warning*** icon in the **PowerMILL *explorer*** has automatically updated to ***white***.

5 **Save**, but do not close, the **Project** as it is to be continued in the next section.

Surface Projection Example

Surface Projection will be used for the **finishing** strategy as it will provide a consistent **stepover** within the undercut regions. To allow this a specially created, single, **reference surface** will be imported (To create this surface the user would require the services of a suitable CAD package such as **PowerSHAPE**). The **reference surface** does not necessarily have to represent the true shape of the finished component. In practice it could be positioned inside, outside, or flush with the actual model surfaces to be machined. In this example the **reference surface** is flush with the existing model.

1 **Import** the additional **model**:

.....\PowerMILL_data\models\heatsink-ref.dgk

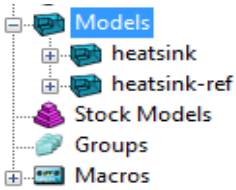

The new imported surface appears as a separate item in the **Models** section of the ***PowerMILL* explorer**. This will be useful when selecting it as the **reference surface** to be used with the **Surface Projection** dialog.

2 From the **main** pull down menus select **View** - **Toolbar** - **Command** to open the **command input** window below the graphics area and type in the following 3 lines:-

EDIT SURFPROJ AUTORANGE OFF

EDIT SURFPROJ RANGEMIN –1

EDIT SURFPROJ RANGEMAX 1

This is to restrict the tool projection distance to within 0.5mm of the reference surface. Otherwise it would be projected from infinity onto non-undercut faces on the outside of the model.

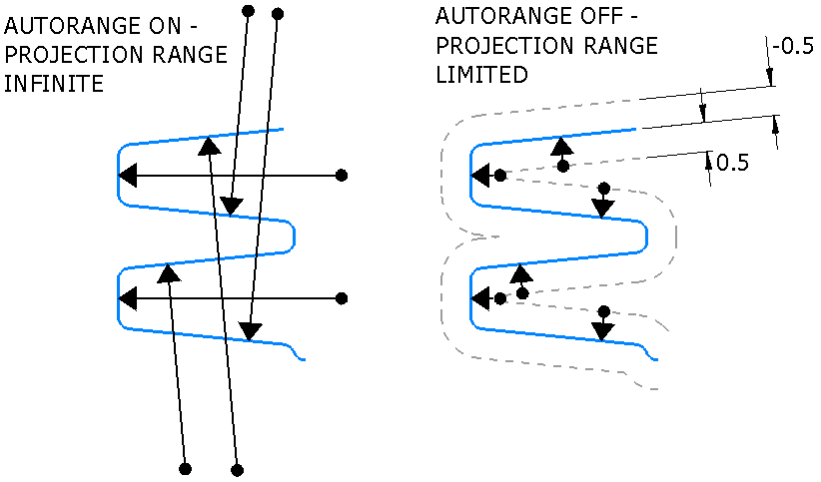

The default setting is restored by typing:-

EDIT SURFPROJ AUTORANGE ON

3 From the **Toolpath Strategies** dialog, select **Projection Surface Finishing**.

4 In the **PowerMILL *explorer***, right-click the model, **Heatsink-ref** and from the local pull down menu click **Select Surfaces**.

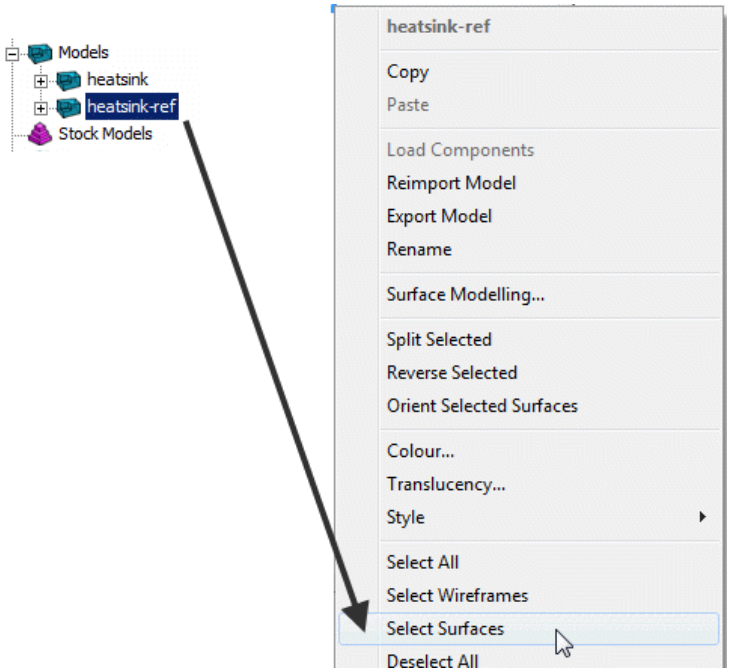

 Copyright © Delcam Ltd

5 In the **Surface Projection Finishing** dialog input the settings and data exactly as shown below.

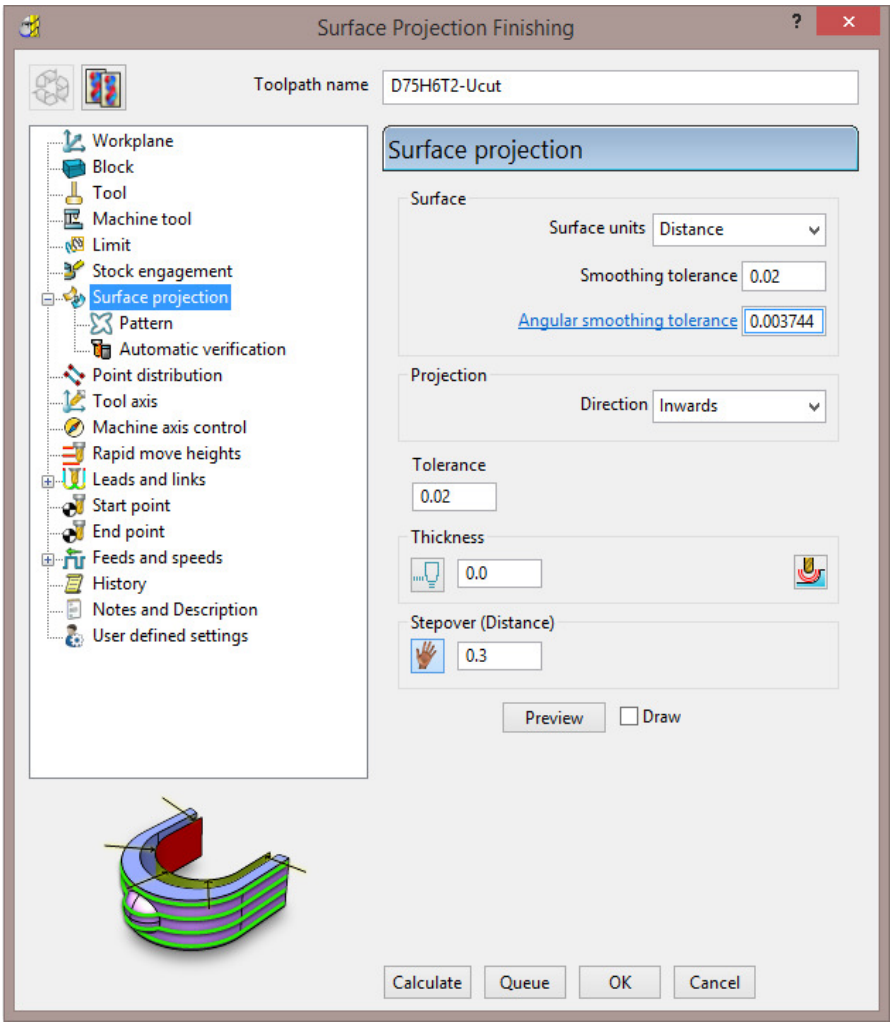

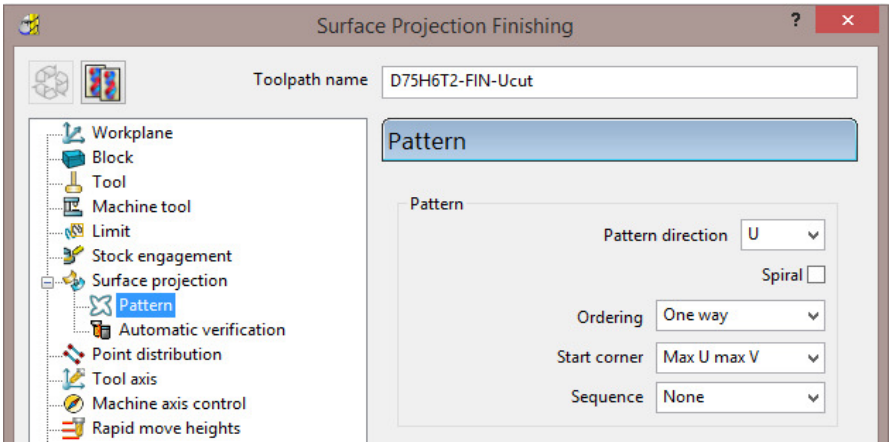

6 Select **Ordering** as **One way**.

7 Set the **Start Corner** as: **Max U max V**

8 Select **Preview**.

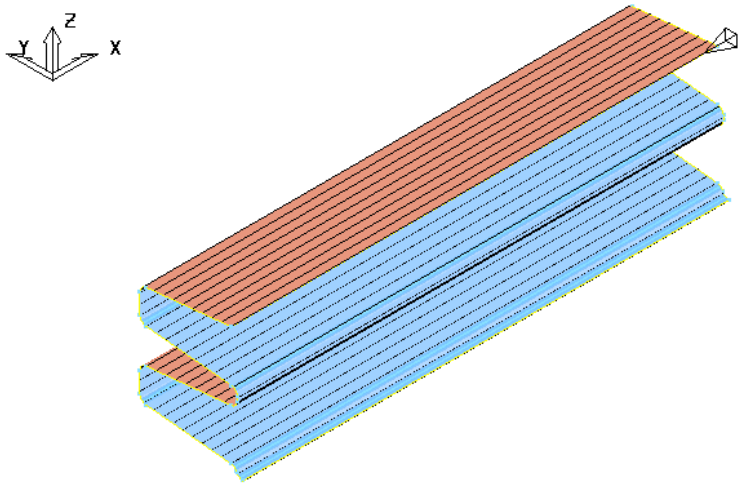

The **Preview** pattern for the strategy is displayed on the ***reference surface*** (for clarity, a stepover value of 3 was used in this illustration).

9 **Calculate** the toolpath and then **Close** the dialog.

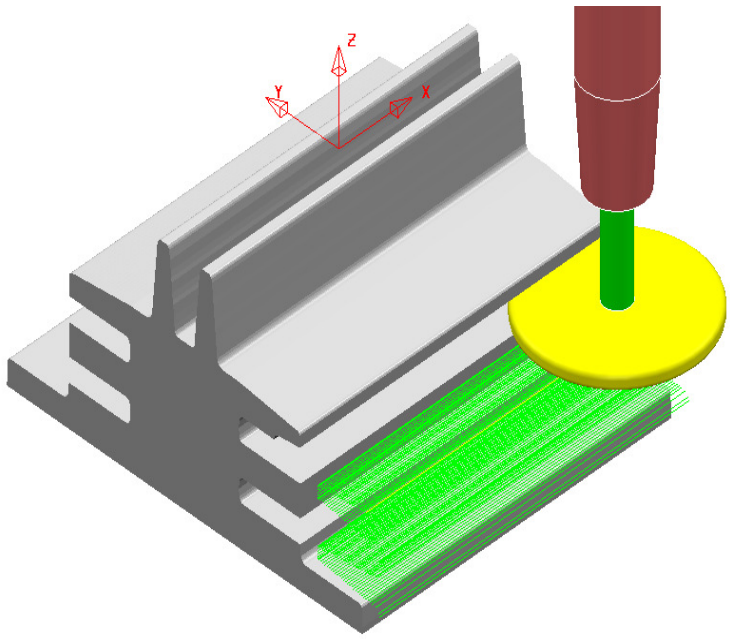

*The unidirectional toolpath is shown here without the defined **Leads and Links** displayed.*

*A suitable **Lead In** and **Lead Out** must be applied to prevent the tool from **gouging** through the overhang.*

The application of **Surface Projection** Finishing has produced a strategy with a consistent ***stepover*** across all of the undercut areas.

10 Select **File** > **Save** to update the stored **Project**.

 Copyright © Delcam Ltd

Line Projection Example

1 Select **File** > **Delete All** and **Tools** > **Reset Forms**.

2 Select **File** > **Open Project**:

.....\PowerMILL_Data\Projects\ucut_proj

3 Select **File** > **Save Project As**:

.....\COURSEWORK\PowerMILL-Projects\Line-Projection

4 Select an **ISO 3** view.

The imported **Project** (training_ucut_proj) contains a **Model**, **Tooling**, **Roughing,** and **Semi-Finishing** strategies with **1** and **0.3 thickness** values respectively. The undercut regions have not yet been machined.

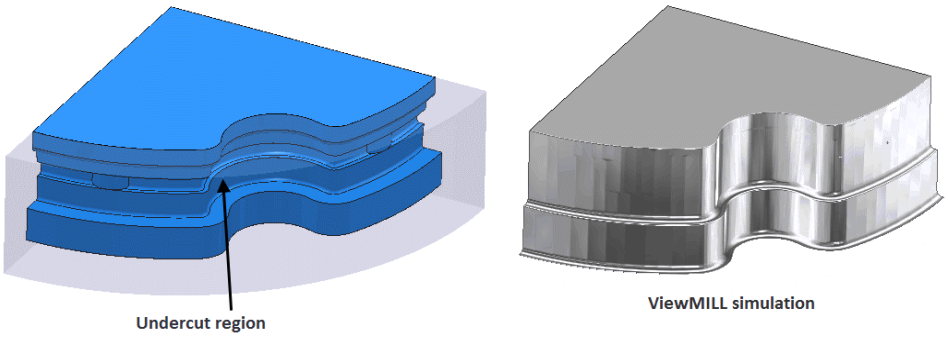

5 **Activate** the **toolpath** (**Rough**) to reinstate the settings and then simulate both existing toolpaths in **ViewMILL**.

Tipped Disc cutters will be used for machining the undercut areas. The toolpath will be created by projecting a suitable strategy inwards, towards a vertical line, located at the lower, left corner.

6 Select a **View from Top (Z)**.

7 Place the cursor over the lower left, corner point without clicking and read the **X** & **Y** values from the **information** toolbar located below the graphics area.

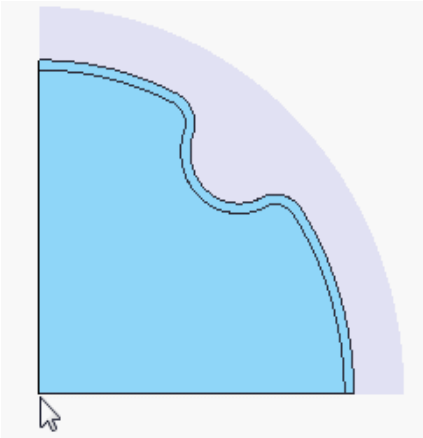

*The **Intelligent Cursor** will accurately lock onto the corner providing accurate coordinate values.*

8 **Activate** the **TD30** cutting tool.

9 From the **Toolpath** strategies dialog, select **Projection Line Finishing**.

10 Fill in the pages of the strategy dialog exactly as shown below.

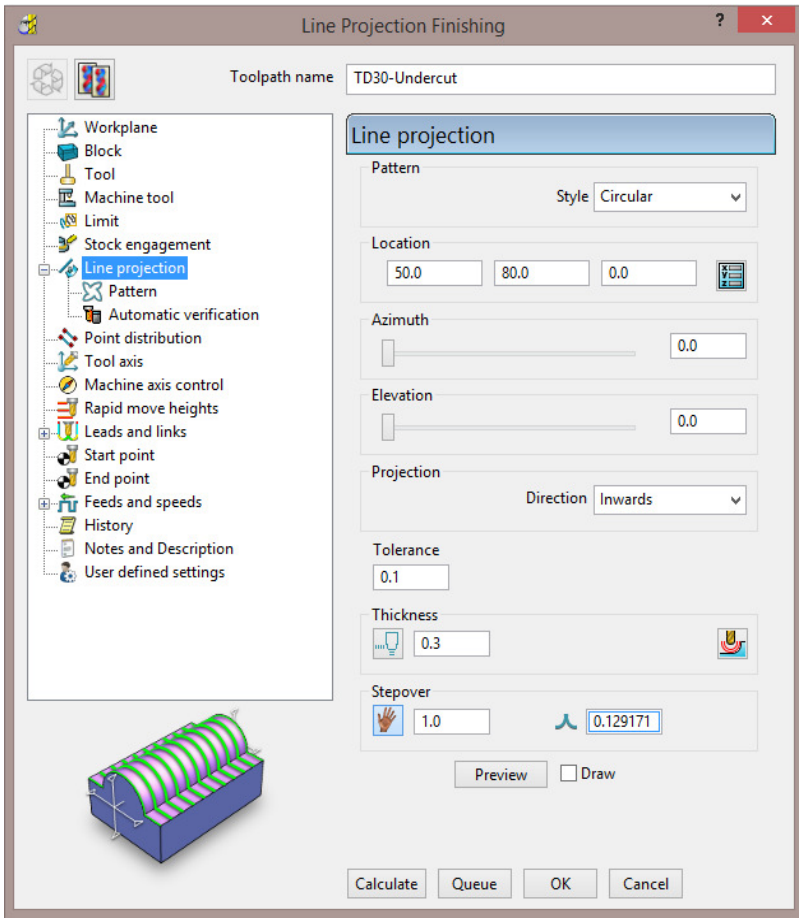

The values for the **Start** and **End** heights were obtained by dynamically moving the cursor over the model to obtain the **Z** values in the ***cursor coordinate boxes*** at the bottom right of the graphics area.

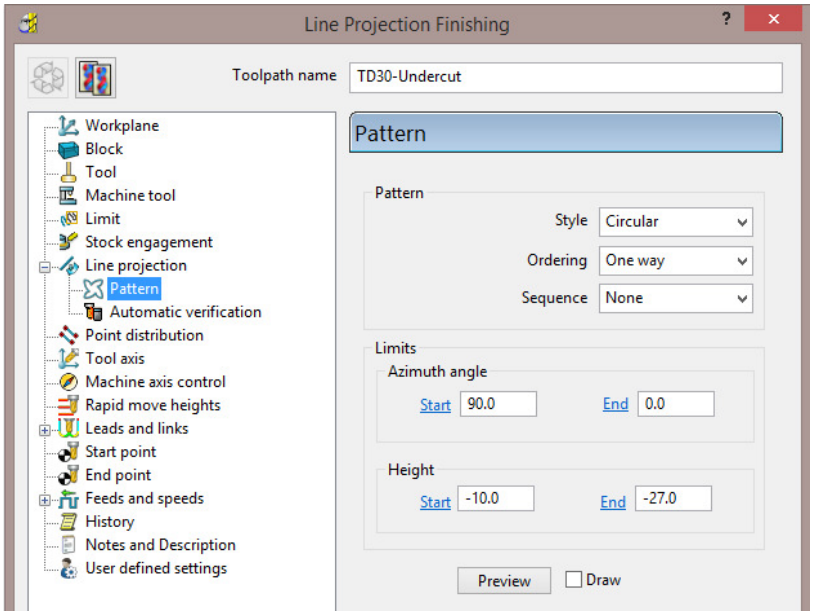

11 Select **Preview**.

 Copyright © Delcam Ltd

The **Preview** shows the location of the ***projection line*** with **arrows** showing an inward projection direction from the **pattern**.

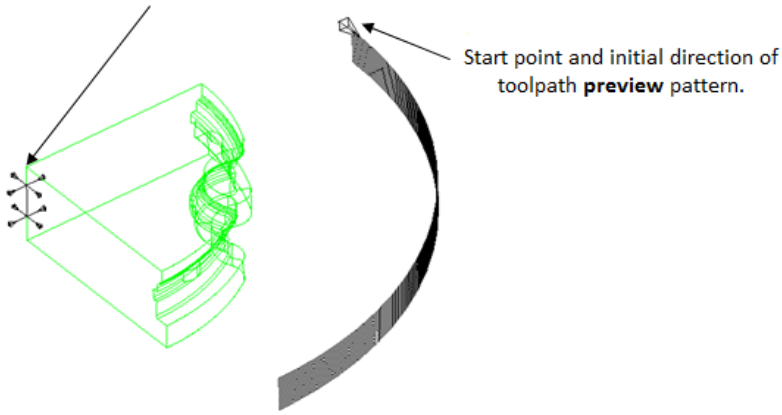

12 **Calculate** the toolpath and then **Close** the dialog.

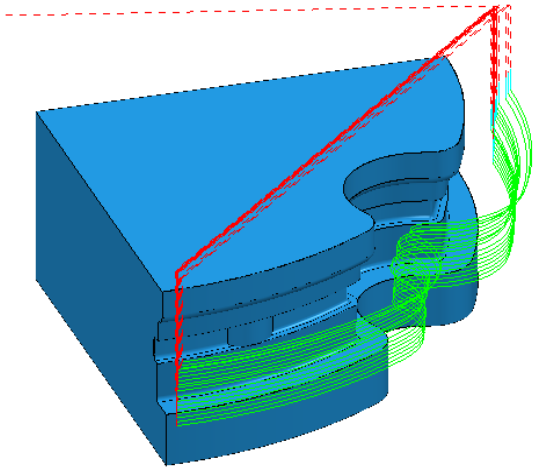

The tool is currently **gouging** through the overhang at the end of each pass.

This is indicated by the red colour of the toolpath icon as displayed in the **PowerMILL *explorer***.

13 Open the **Leads and Links** dialog.

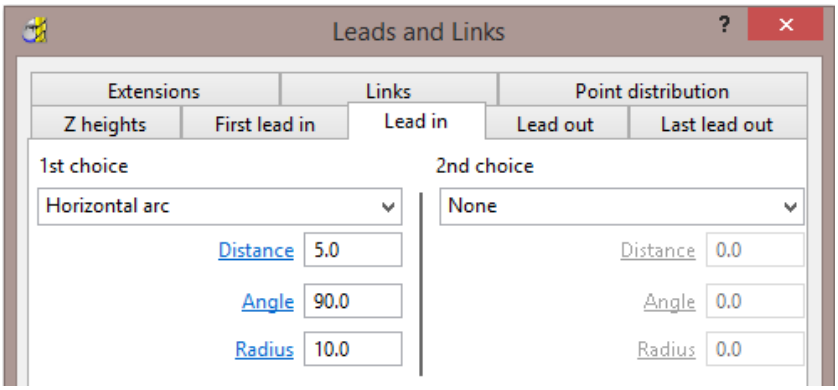

14 Select the **Lead In** tab.

15 Input the following information:

1st Choice > **Horizontal Arc**

Distance > **5**

Angle > **90**

Radius > **10**

16 Select the **Lead out the same as lead in** tab.

17 Click **Apply** and then **Accept** to close the dialog.

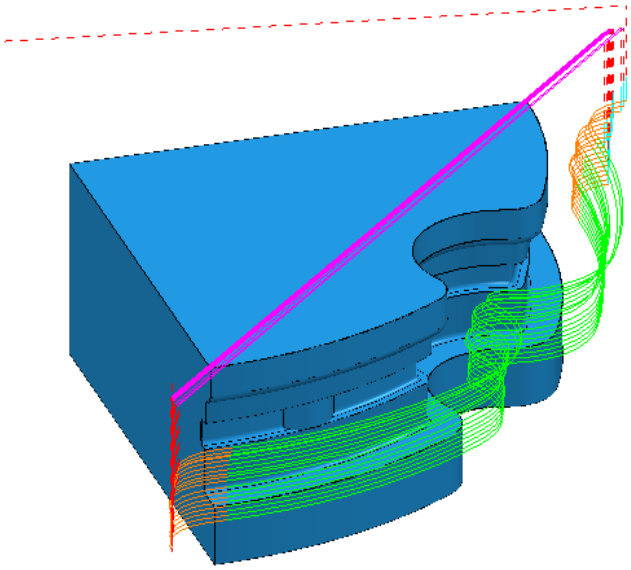

*The **extension** value in **Leads and Links** must be more than the tool radius to prevent gouging.*

*The **red** warning icon in the **PowerMILL explorer** will now have changed to **green**.*

18 Select **File** > **Save** to update the stored **Project**.

 Copyright © Delcam Ltd

Point Projection Example

1 Select **File** > **Delete All** and **Tools** > **Reset Forms**.

2 Select **File** > **Import Model**:

.....\PowerMILL_Data\Models\radknob.dgk

3 Select **File** > **Save Project As**:

.....\COURSEWORK\PowerMILL_Projects\PointProj-ex1

4 In the **PowerMILL *explorer***, right-click **Workplane 1** and from the local menu select **Activate** followed by **Workplane Editor** to display the following toolbar:

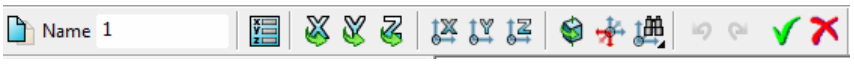

5 From the toolbar select **Twist about Y** to open the **Twist** dialog.

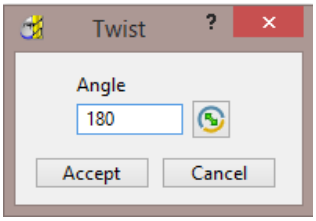

6 In **Angle**, enter **180** and click **Accept**.

7 Click the **Green** tick to accept the changes and close the toolbar.

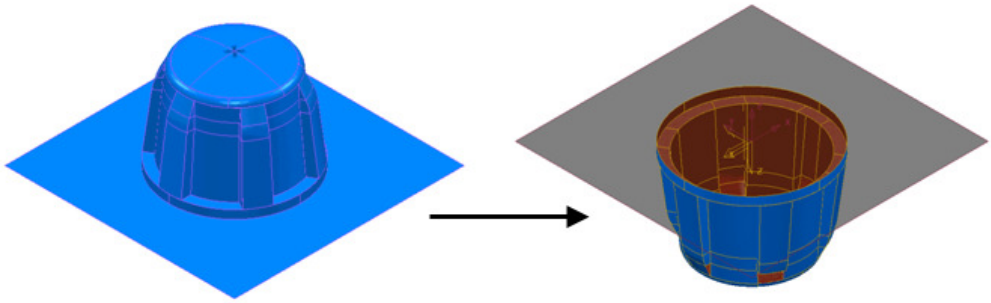

The **Workplane** is rotated **180** degrees about **Y** to provide vertical machining access to the inner wall. However, machining is currently impossible due to the pocket being shielded by an untrimmed planer **surface** (shown part shaded). This example will apply **Component Thickness** options to set this **surface** to be ***ignored*** while applying the machining strategy.

8 Create a Dia **16** ball nosed cutter named **BN16**.

9 **Calculate** a **Block** using **Defined by** - **Box** and **Type** - **Model**.

10 **Calculate** the **Rapid Move Heights** using the default settings.

11 From the **Strategy Selector** dialog, select **Projection Point Finishing**.

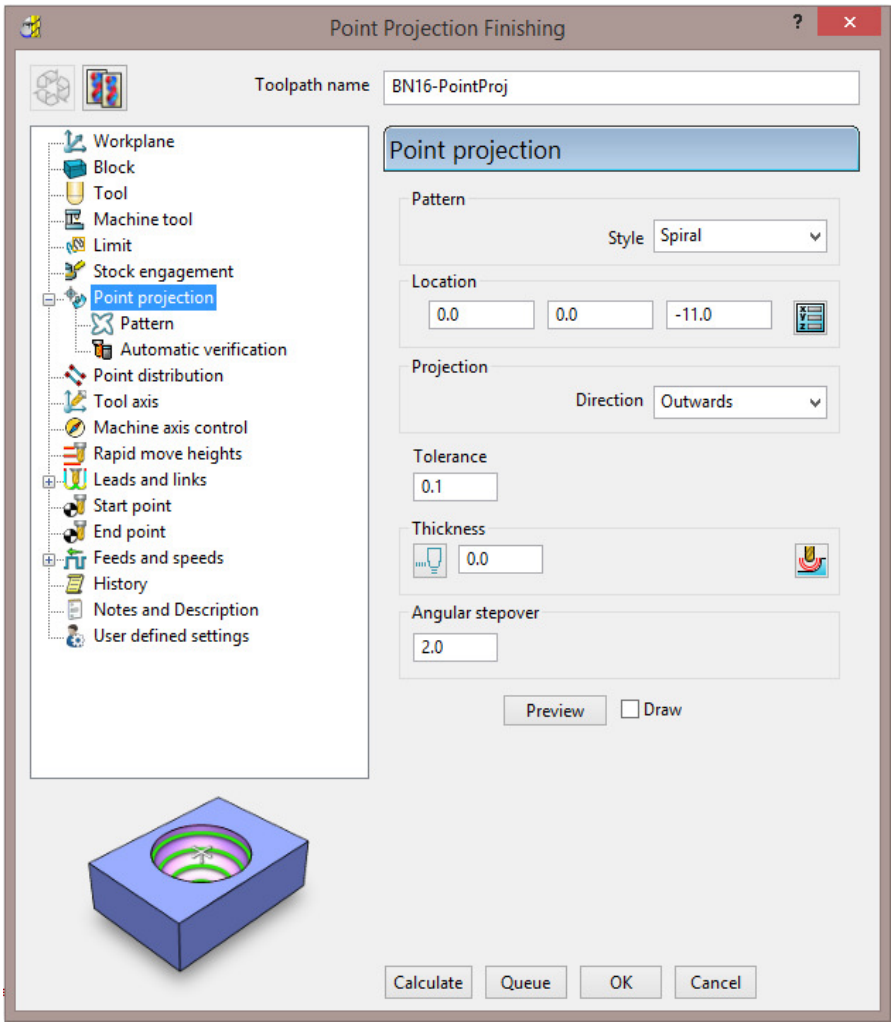

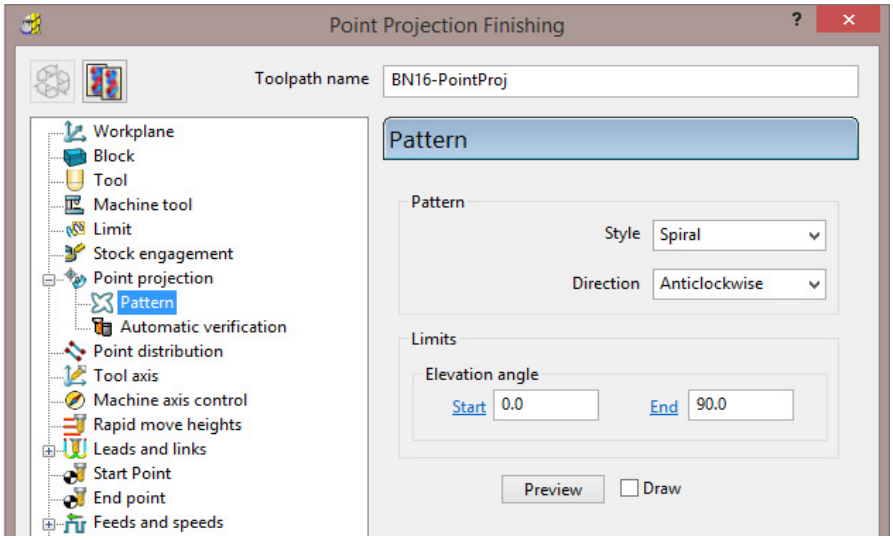

12 Fill in the page of the dialog exactly as shown above and select **Preview** to observe the **Point Projection** setup.

 Copyright © Delcam Ltd

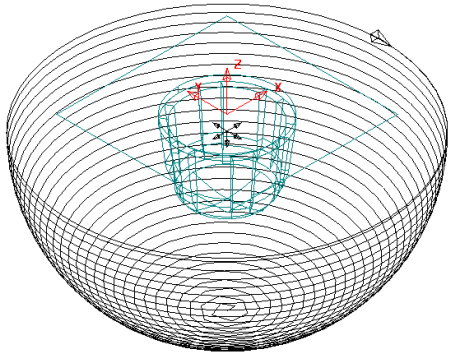

13 In the main page of the **Point Projection Finishing** dialog select the **Component Thickness** icon and in the dialog select the **Surfaces** tab.

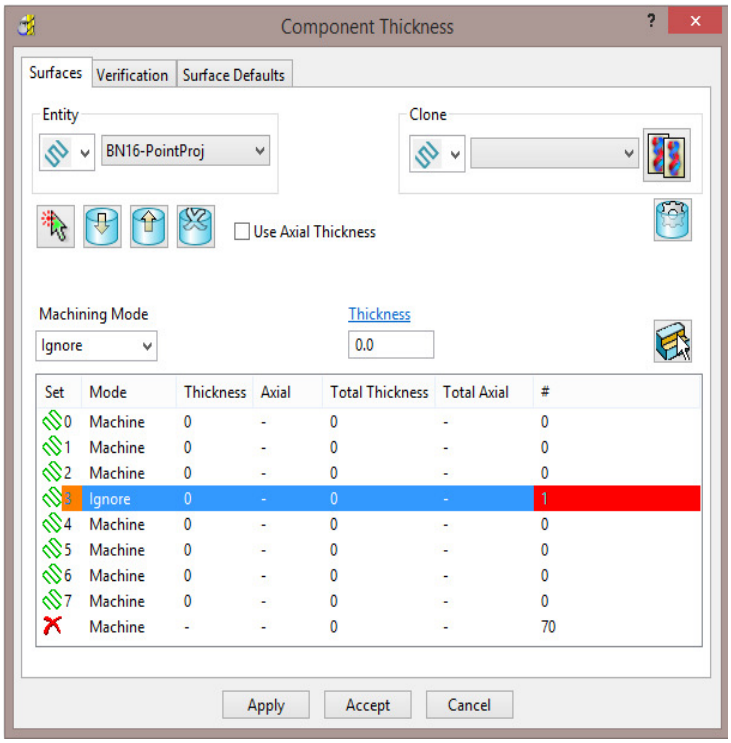

14 Click on any of the 8 rows to display a coloured box at the start. In the graphics area, ensure that the only the untrimmed planar, **surface** is selected.

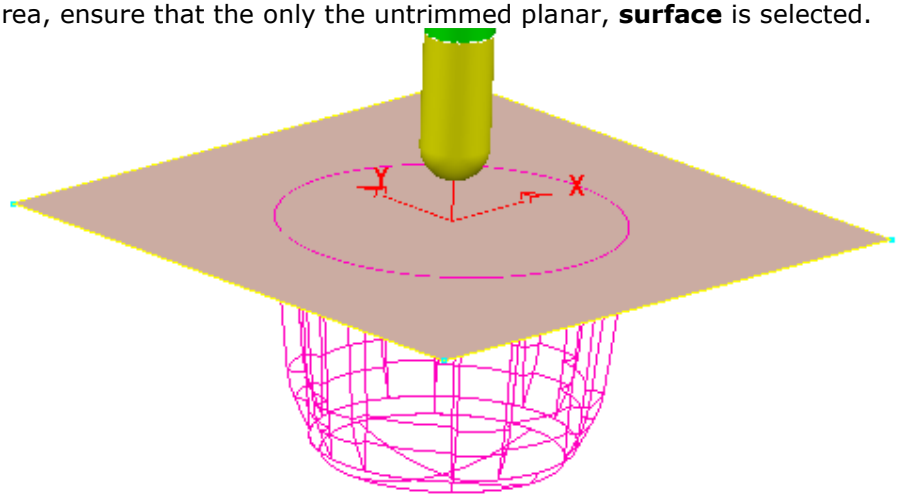

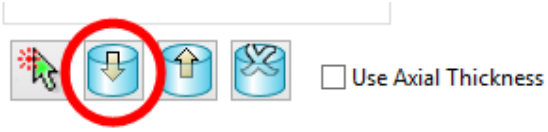

15 Click the **Acquire Components** icon to add the selected, planar surface to the row.

16 Select **Ignore** in the **Machining Mode** box.

17 **Apply** and **Accept** the **Component Thickness** dialog.

18 **Calculate** the **Projection Point Finishing** toolpath and then **Close** the dialog.

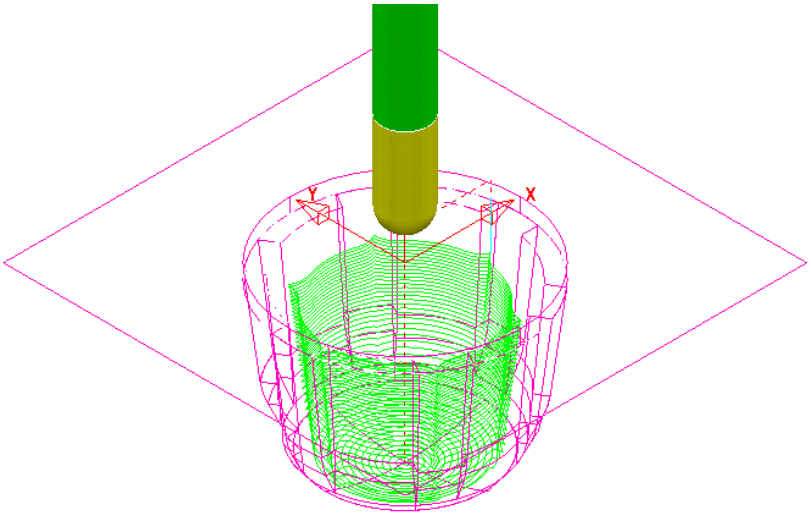

The inside of the pocket has successfully been machined. This would not have happened if the untrimmed surface, blocking access had not been included in a **Component Thickness** list with the **Machining Mode** set to **Ignore**.

19 Select **File** > **Save** to update the stored **Project**.

 Copyright © Delcam Ltd

Curve Projection Example

1 Select **File** > **Delete All** and **Tools** > **Reset forms**.

2 Select **File** - **Import Model** and select:

.....\PowerMILL_Data\Models\ crvproj_3D.dgk

(Note the model also includes a wireframe curve running centrally along the slot).

3 Select **File** > **Save Project As**:-

.....\COURSEWORK\PowerMILL_Projects\CurveProj-Ex1

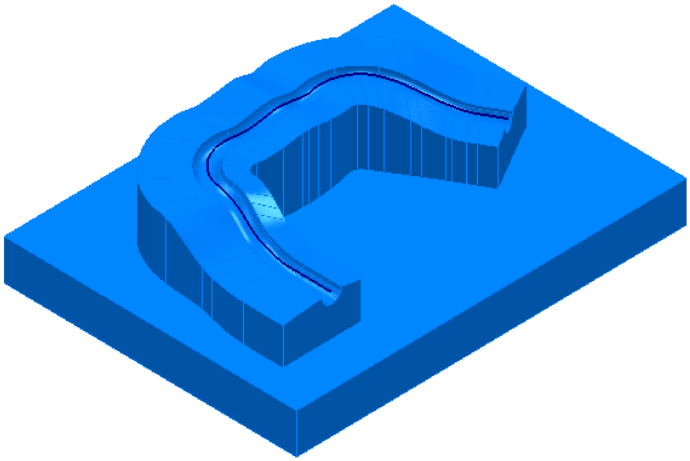

4 Calculate the **Block** using **Defined by - Box** and **Type - Model**.

5 Define a Dia **16** Ball Nosed tool called **BN16**.

6 Calculate **Rapid Move Heights** using the default settings.

7 In the **PowerMILL *explorer***, right-click **Pattern** and from the local menu select **Create Pattern**.

8 Select the ***wireframe curve*** (coloured green) running centrally along the slot on the **Model** (Note; The **Wireframe** view must be active for the curve to be visible).

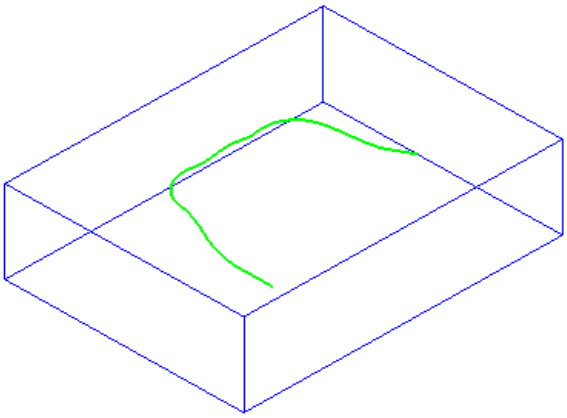

9 In the **PowerMILL *explorer***, right-click on the new **Pattern** (**1**) and in the local menu select **Insert** > **Model**.

10 From the **Strategy Selector** dialog, select **Projection Curve Finishing**.

11 Fill in the page of the dialog exactly as shown below and select **Preview** to observe the ***Curve Projection*** setup.

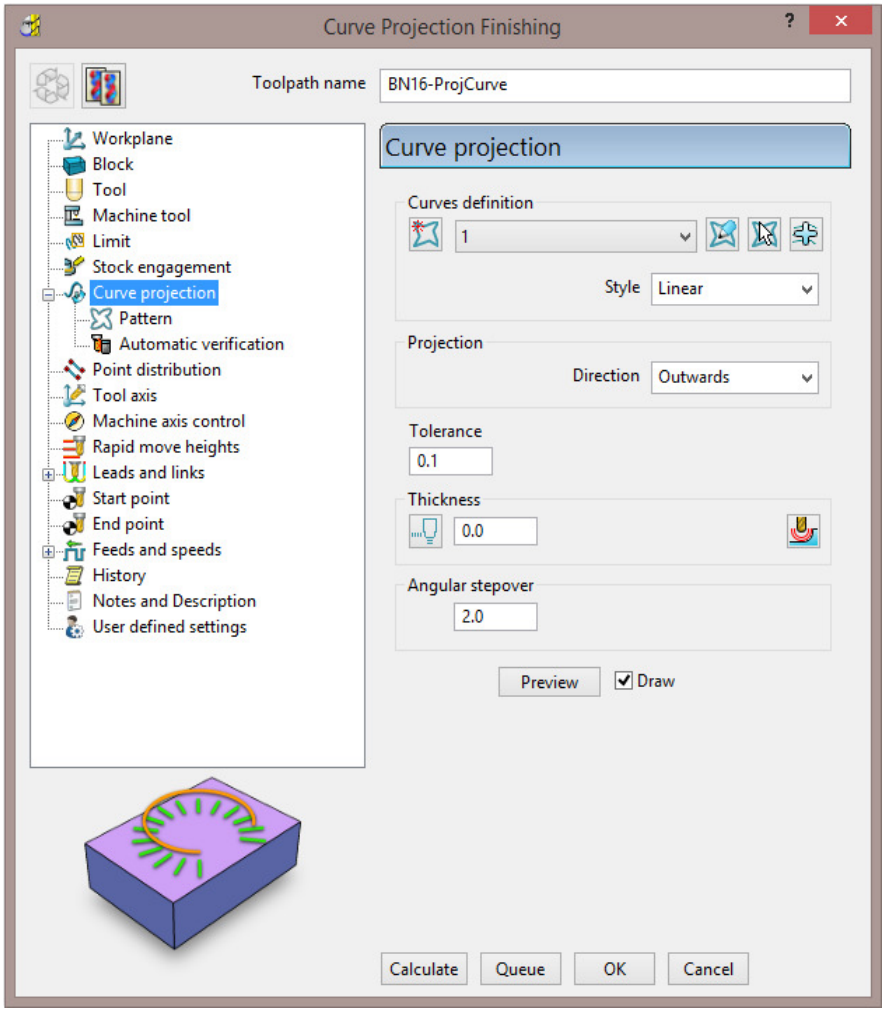

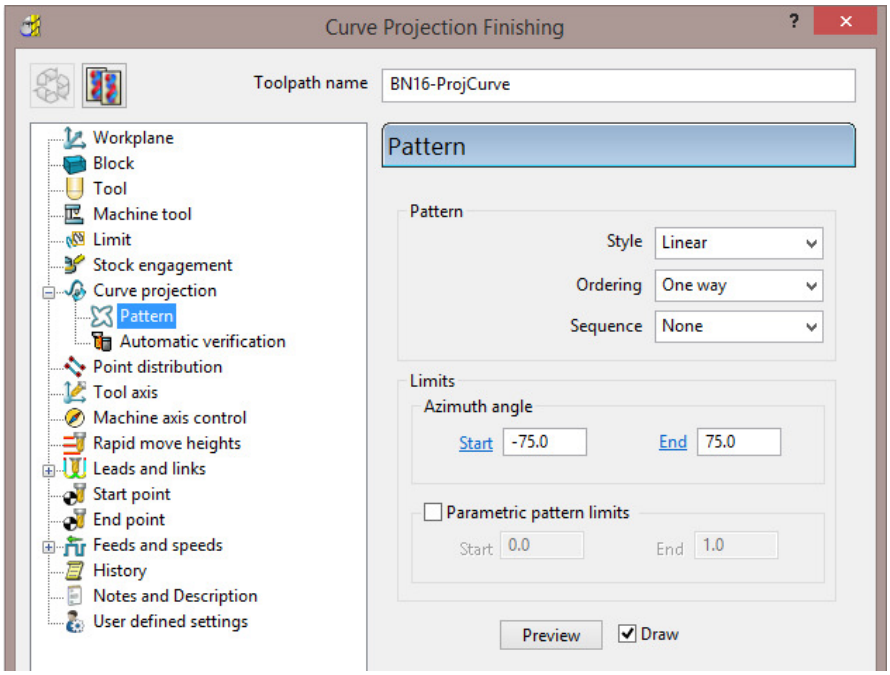

 Copyright © Delcam Ltd

Visually the **preview** is somewhat of a mess, containing crossovers and loops along the path. The actual toolpath however should not suffer the same problem, with the projection distance to the machining areas being a lot shorter (well before loops or crossovers start to appear).

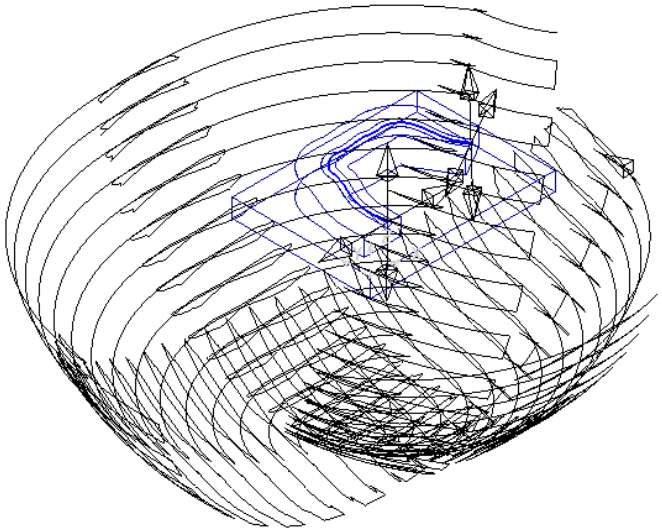

12 **Calculate** the **Projection Curve** toolpath and then **Close** the dialog.

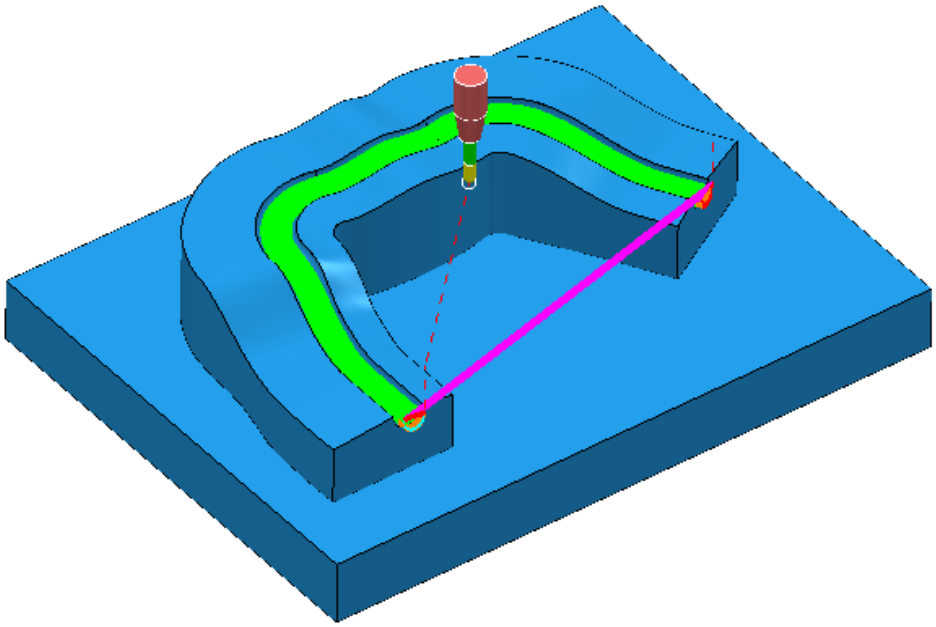

*The **Curve** used as the basis for the strategy will in the majority of cases be created in a CAD package as part of the **Model**. In these cases the imported **wireframe** curve must then be inserted into a **Pattern**.*

13 Select **File** > **Save** to update the stored **Project**.

Swarf Finishing

Swarf Finishing is specifically designed to machine down one or more surfaces where a linear transition exists along the tool alignment direction. It will not work where the transition is concave or convex.

For 3 Axis applications the tool axis must be set to **Vertical**.

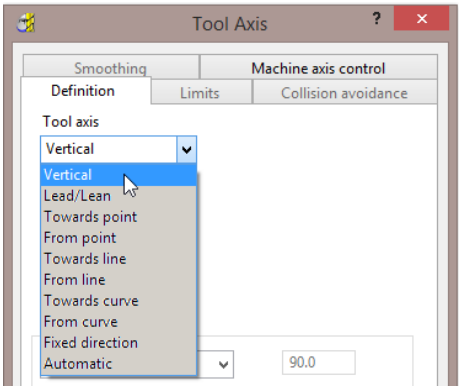

The strategy can be set to create either single (default) or multiple passes, exactly following the upper edge, lower edge, or both (merging).

In the following example the Spar sidewalls will be selected and Swarf machined. This will provide a strategy similar in appearance to Constant Z but applied locally to the selected surfaces and guaranteed to run the final pass exactly along the bottom edge (subject to gouge checking).

1. Select **File** > **Delete All** and **Tools** > **Reset forms**.
2. From **File** > **Open Project** select the (read-only) **Project**:

   .....\PowerMILL_Data\Projects\3Axis_SwarfStart1

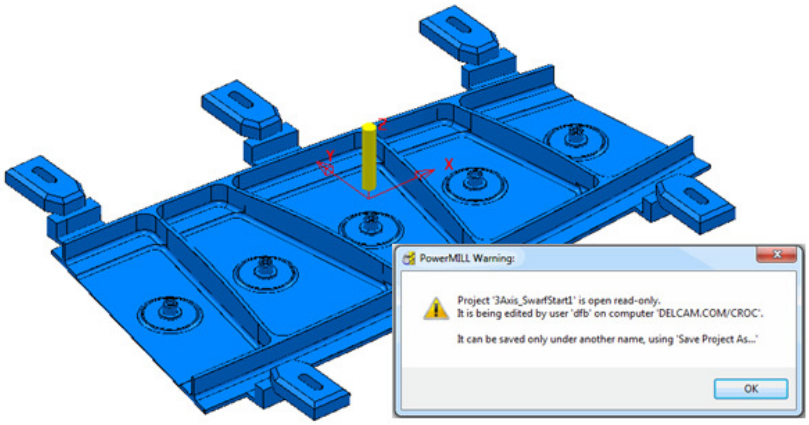

3. From **File** select **Save Project As**:

   .....\COURSEWORK\PowerMILL-Projects\3AxisSwarfExample
4. In the **PowerMILL *explorer***, activate the **workplane *mc-Datum***.
5. In the **PowerMILL *explorer***, activate the Dia 16 End Mill (**EM16**).
6. Calculate a **Block** using ***Defined by*** - **Box** and ***Type*** - **Model**.
7. Calculate the **Rapid Move Heights** using the default settings.

 Copyright © Delcam Ltd

8 In the **PowerMILL *explorer***, click the [**+**] adjacent to **Levels and Sets** to access all of the existing **Levels**.

9 Right-click on the **Level *Swarf-MC*** and click **Select Surfaces** from the local menu.

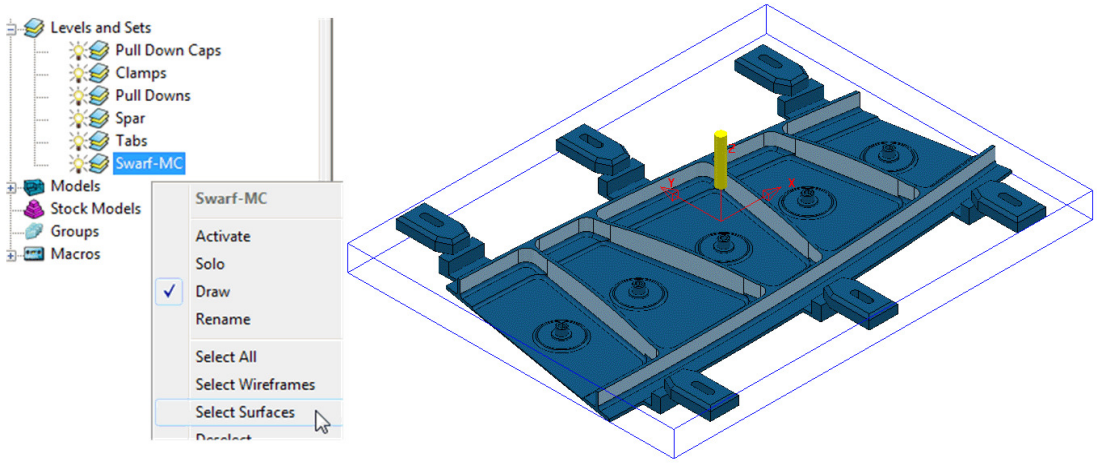

All **Surfaces** on **Level *Swarf-MC*** will be selected (light blue) to be included in the **Swarf** strategy.

10 In the **Strategy Selector**, select the **Finishing** tab, and then select the **Swarf Finishing** strategy.

11 Enter data exactly as shown in the following 2 pages of the dialog.

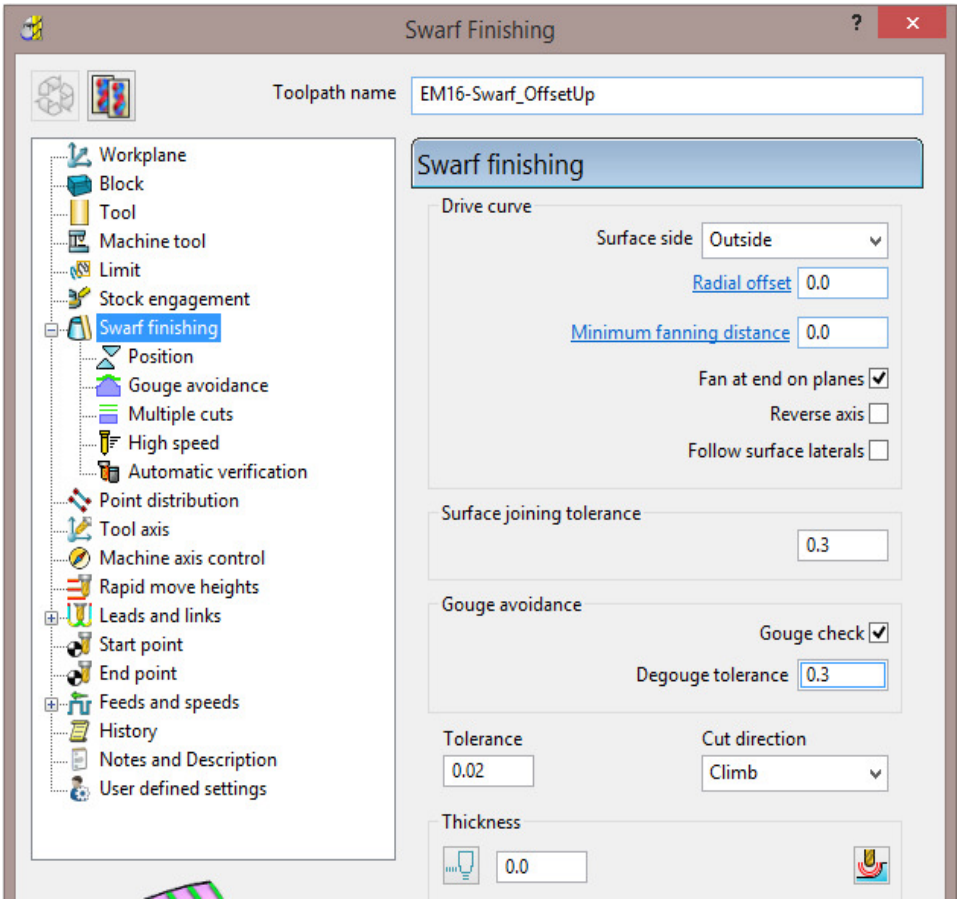

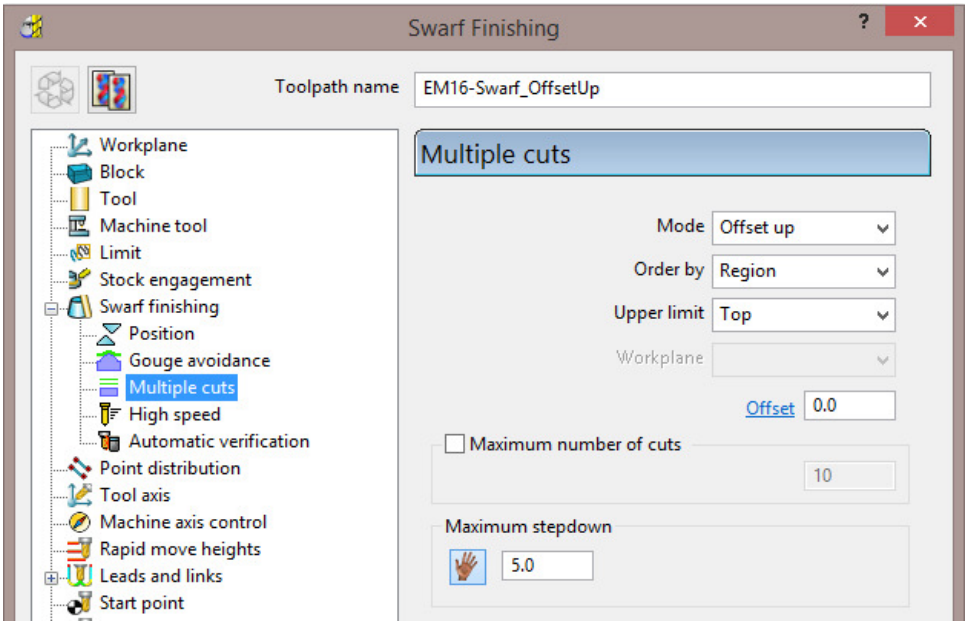

12 Select **Calculate** to create the **Swarf Finishing** toolpath and then **Close** the dialog.

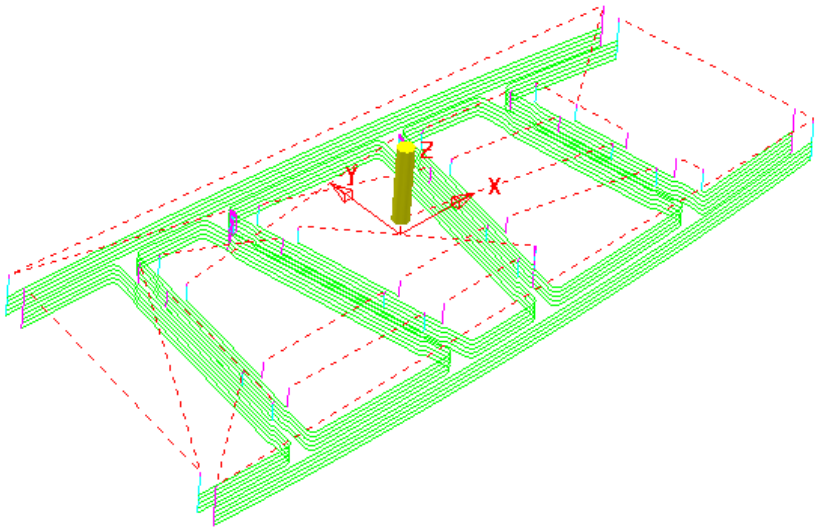

*The tool tracks that machine the base of the **selected surfaces** have progressively offset upwards (by the stepdown value) until fragmentation occurs when the upper edge is exceeded. This can be prevented by using, **Mode Merge** instead of **Offset Up**.*

13 In the **PowerMILL *explorer***, right-click the **toolpath *EM16-Swarf_OffsetUp*** and select **Settings**.

14 Select the ***Copy Toolpath*** icon from the dialog .

15 **Rename** the new **Toolpath** as **EM16-Swarf_Merge**.

16 In the page labelled **Multiple Cuts** change the **Mode** to **Merge** and with all **surfaces** on the **Level *Swarf-mc*** selected, **Calculate** the strategy.

 Copyright © Delcam Ltd

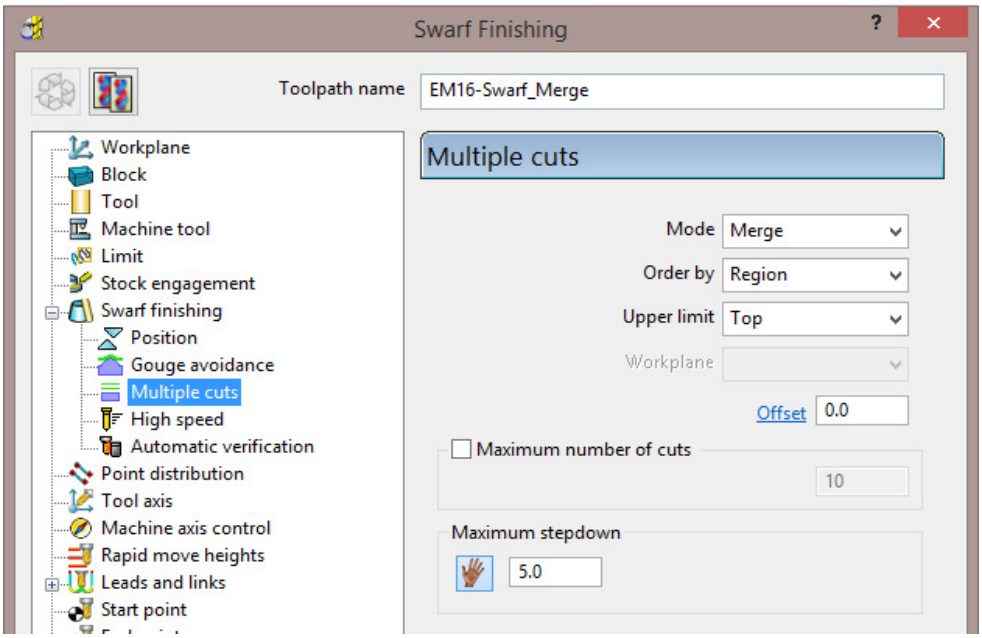

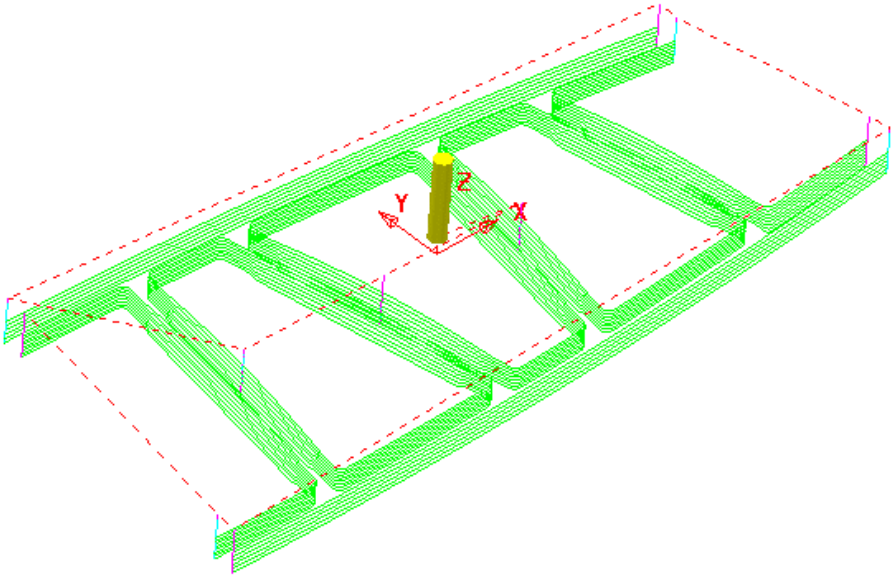

__Merge__ will use a variable __stepdown__ to exactly track the __selected surfaces,__ upper and lower edges and minimize the number of lift moves.

17 Right-click the last **toolpath *EM16-Swarf_Merge***, in the **PowerMILL *explorer*** and select **Settings**.

18 Select the ***Copy Toolpath*** option.

19 **Rename** the new **toolpath** as **EM16-Swarf_SinglePass**.

20 On the **Multiple Cuts** page, change the **Mode** to **Off**.

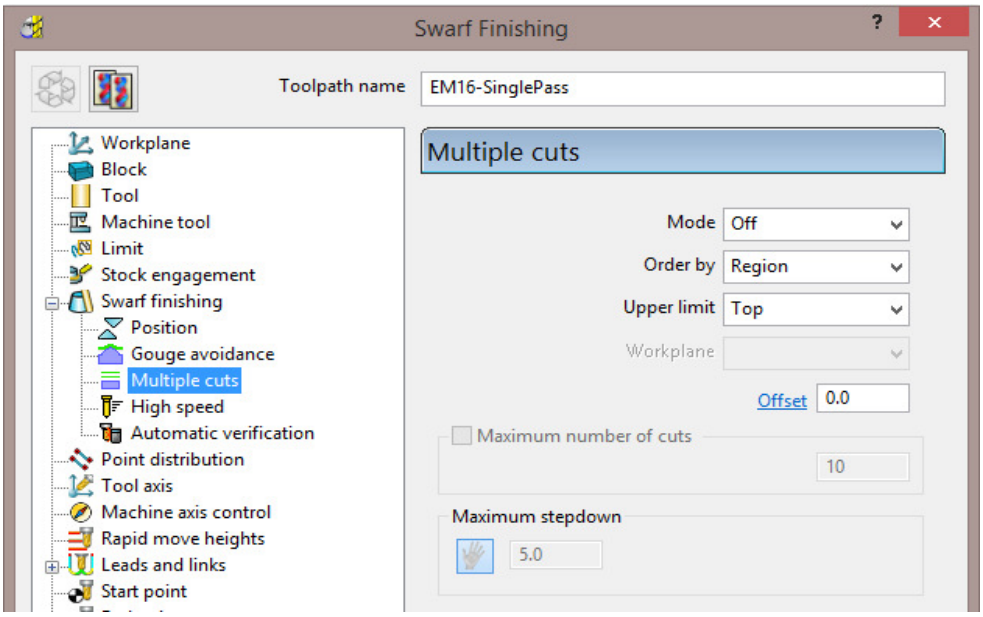

21 With all **surfaces** on the **Level *Swarf-mc*** selected, **Calculate** the strategy.

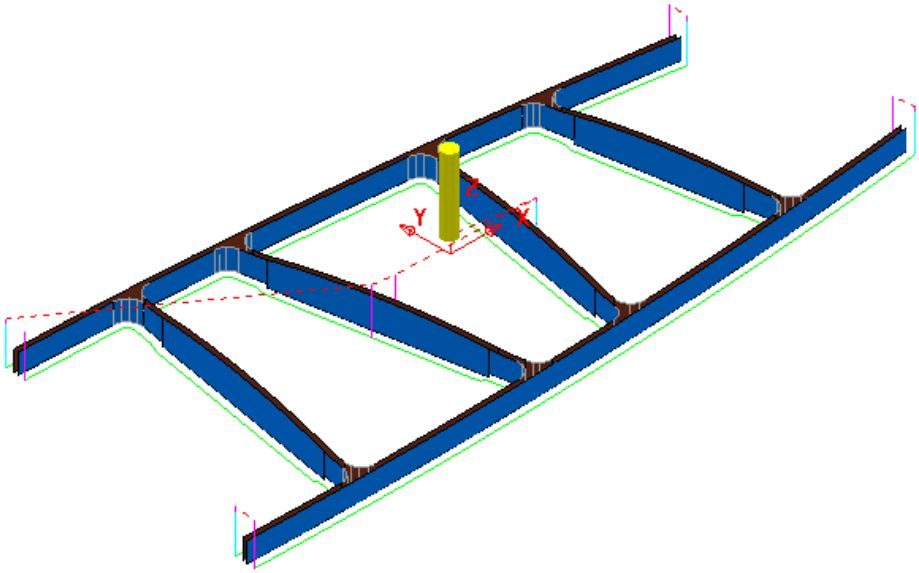

22 Close the **Swarf Finishing** dialog.

23 Select **File** > **Save** to update the stored **Project**.

.....\COURSEWORK\PowerMILL-Projects\3AxisSwarfExample

 Copyright © Delcam Ltd

Parametric Offset Finishing

Parametric Offset Finishing creates a strategy that tracks between two individual **Patterns** with a stepover that adjusts to the shape of the ***selected surfaces***. The tool tracks can be created parallel (along) or span between (across) the **Pattern** segments.

1 Select **File** > **Delete All** and **Tools** > **Reset forms**.

2 **Open** the read-only **Project**:

.....\PowerMILL_Data\Projects\EditToolpaths_3

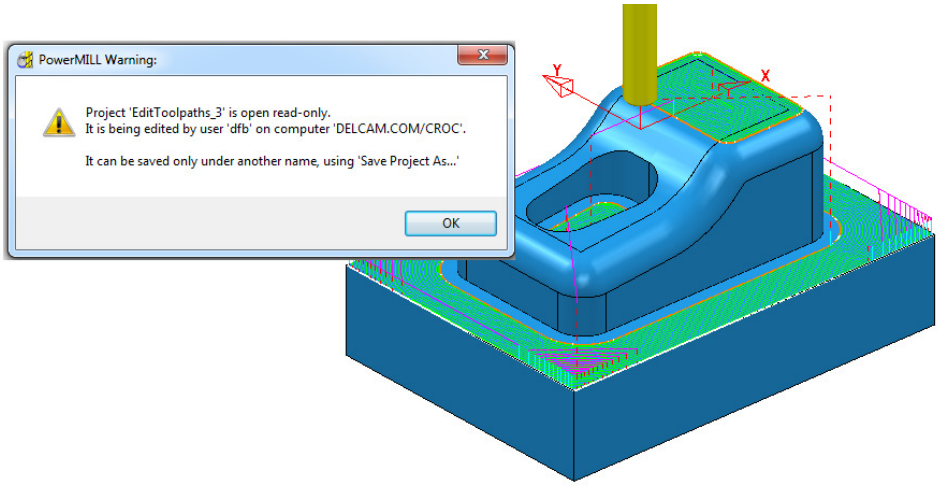

3 Click **OK** in the ***PowerMILL Warning*** dialog and **Save Project As**:

.....\COURSEWORK\PowerMILL-Projects\ParaOffset-ex1

4 **Activate** the Dia 16 Rad 3 **Tip Radiused** tool named **D16TR3**.

5 With the new **tool *active***, and the **surfaces** shown (below left) selected, create a **Selected Surface Boundary**.

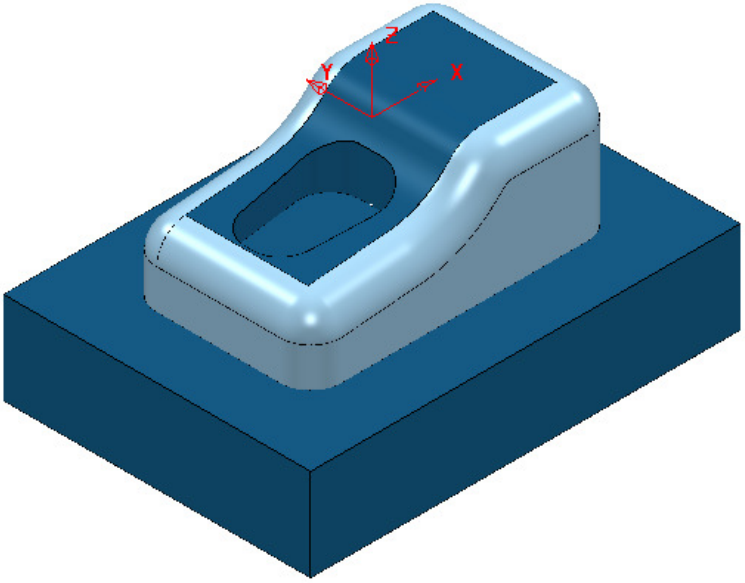

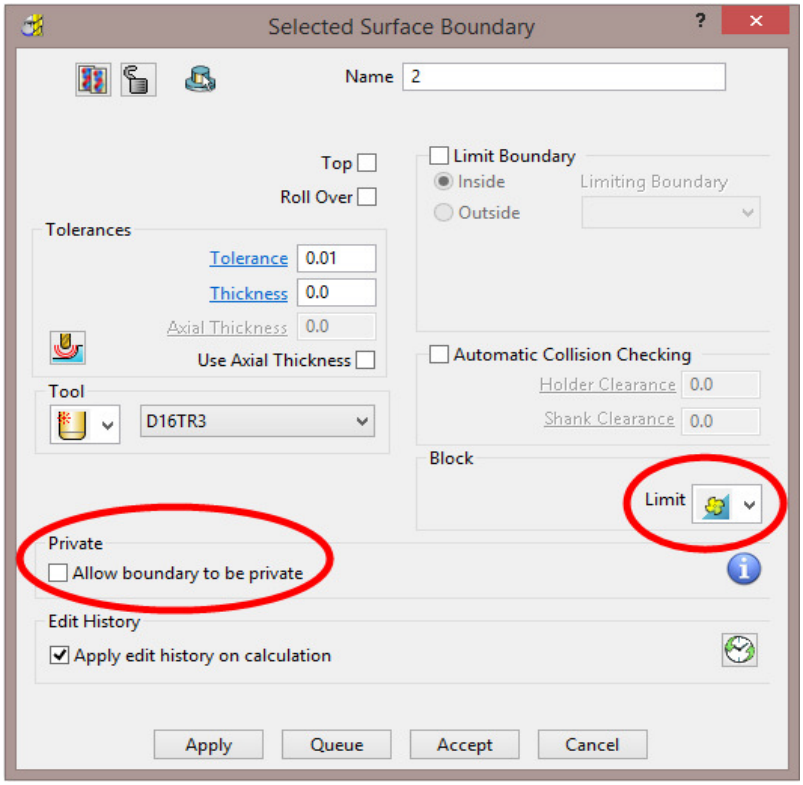

6 Create an empty **Pattern**, named ***Upper*** and **Insert** the upper **Boundary** segment into it.

7 Create another empty **Pattern**, named ***Lower*** and **Insert** the lower **Boundary** segment into it.

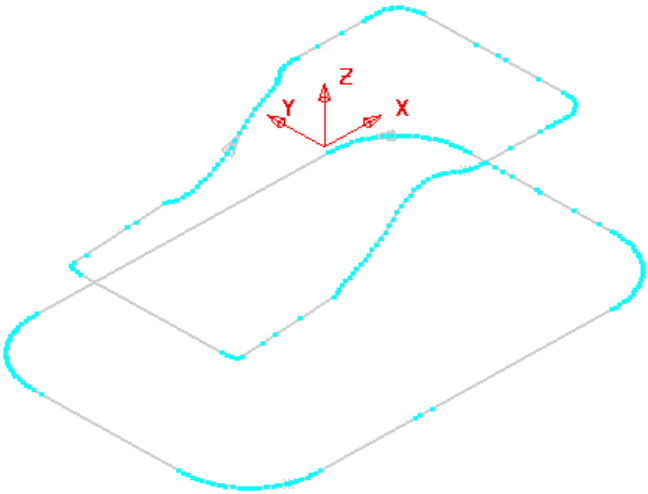

It is not necessary for both of the **Pattern** segments to run in the same direction as the ***Upper*** one will control the toolpath direction.

8 Make sure that no **Boundaries** are **Active**.

9 Open the **Parametric Offset Finishing** dialog and fill in as shown below.

 Copyright © Delcam Ltd

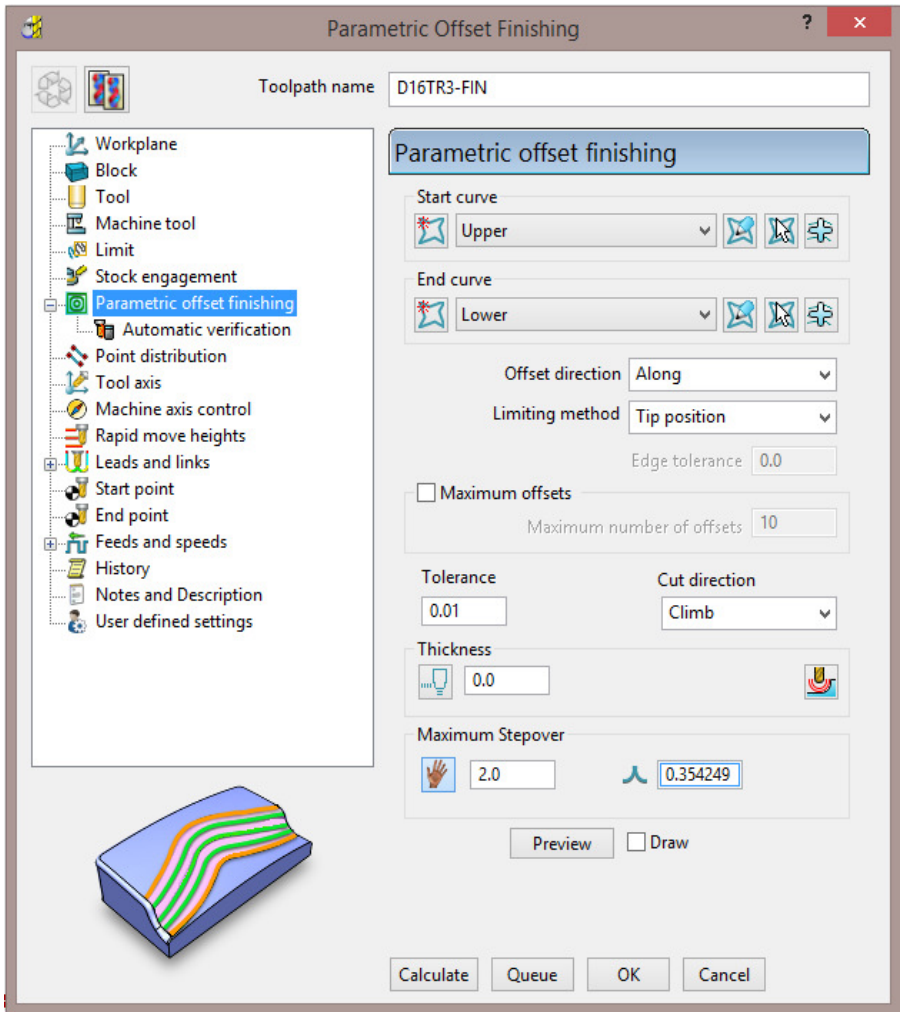

10 Select **Calculate** to create the toolpath and then **Close** the dialog.

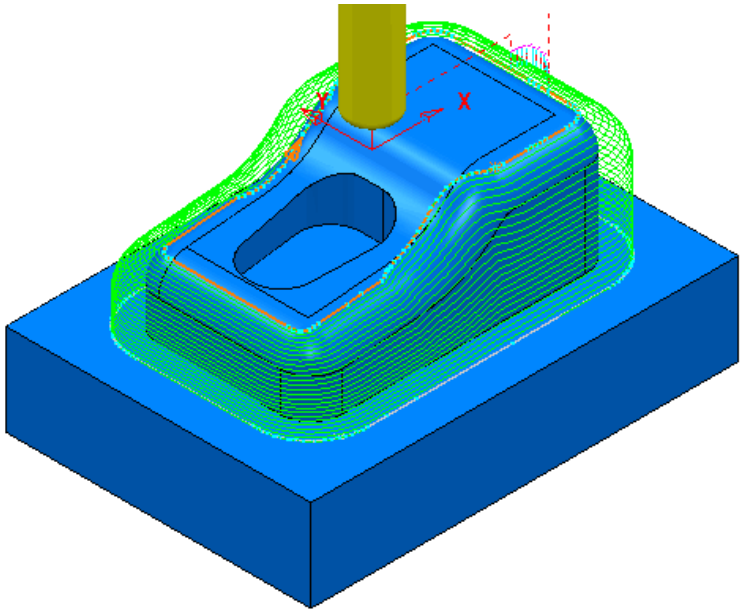

11 Select **File** > **Save** to update the stored **Project**.

12 Do not delete the **Project** as it will be continued in the next section.

Parametric Spiral Machining

This strategy starts from a **Pattern** and merges a ***spiral toolpath*** towards an **Outer limit** which is either defined by the **Block** or to one or more **surfaces** acquired to a **Level** or **Set**.

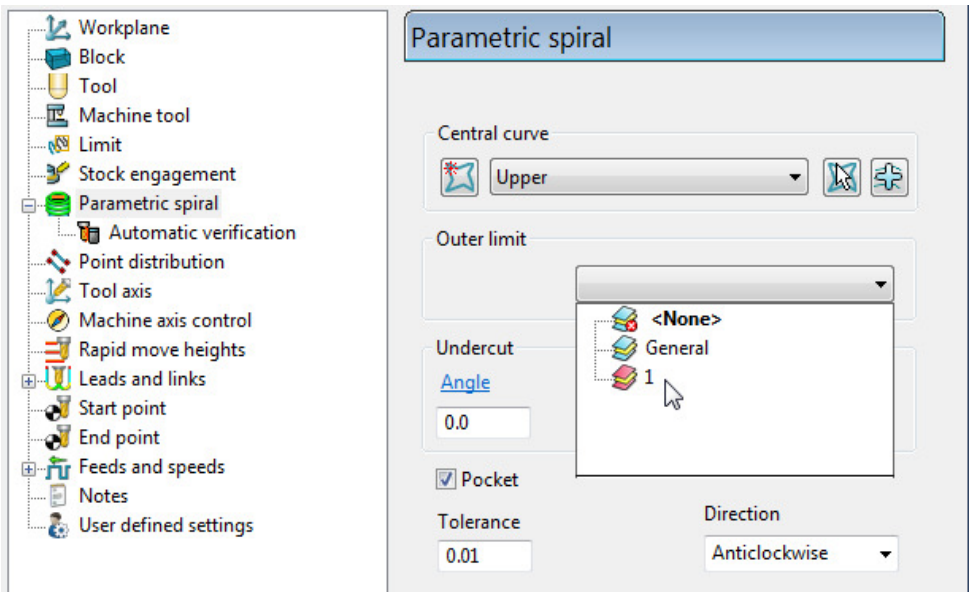

The direction of the toolpath created in the **Parametric Spiral Finishing** strategy is controlled by the **Cut Direction** ***Anticlockwise***/***Clockwise***. The direction of the central **Pattern** has no control over the toolpath direction.

If the **Pocket** option is ***ticked*** the resultant **toolpath** will start at the **Outer limit**.

1 In the **PowerMILL** ***explorer*** right mouse click on **Levels and Sets** and from the local menu select **Create Set**.

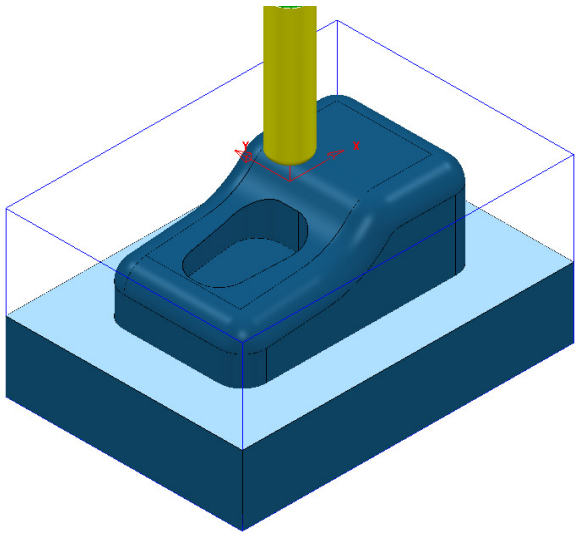

2 Select the upper base **Surface** and from the new **Set** (**1**), local menu select **Acquire Selected Model Geometry**.

3 Make sure that no **Boundaries** are **Active** or displayed.

4 Open the **Parametric Spiral Finishing** dialog and fill in as shown below.

 Copyright © Delcam Ltd

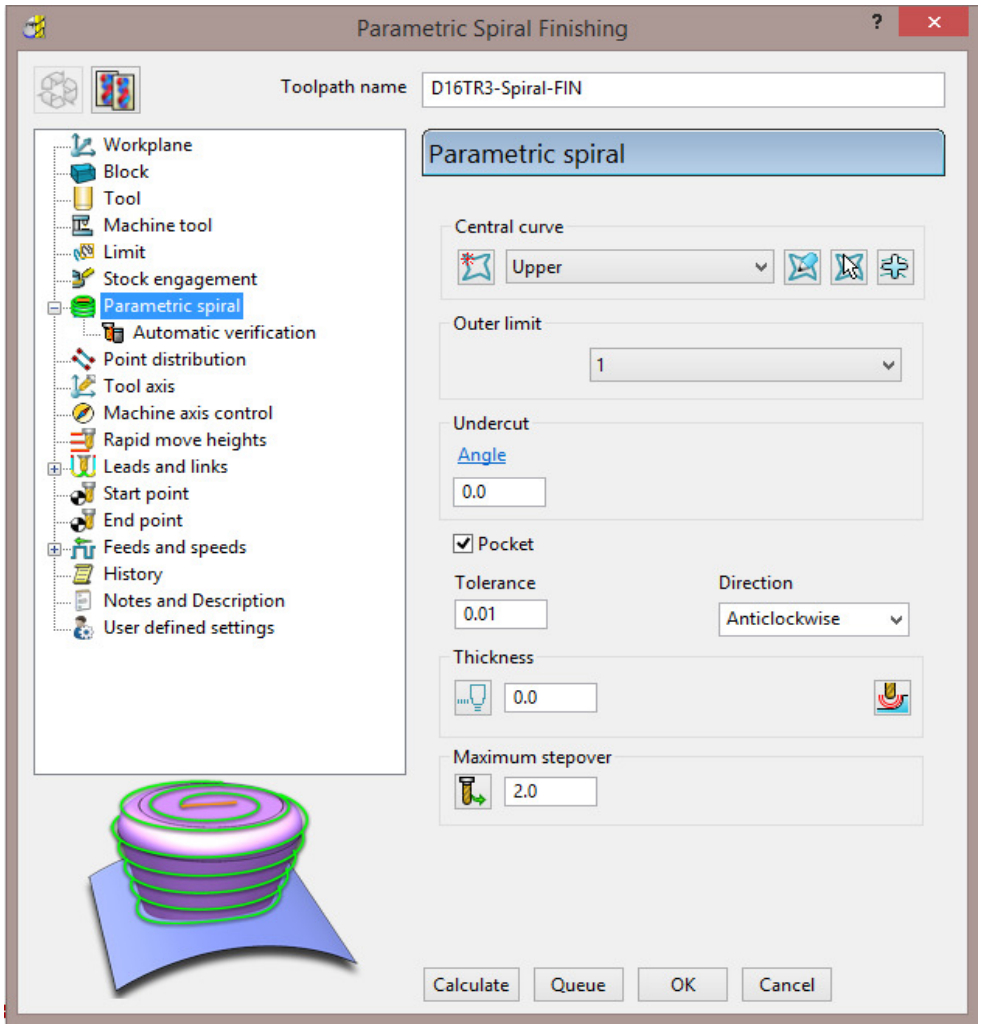

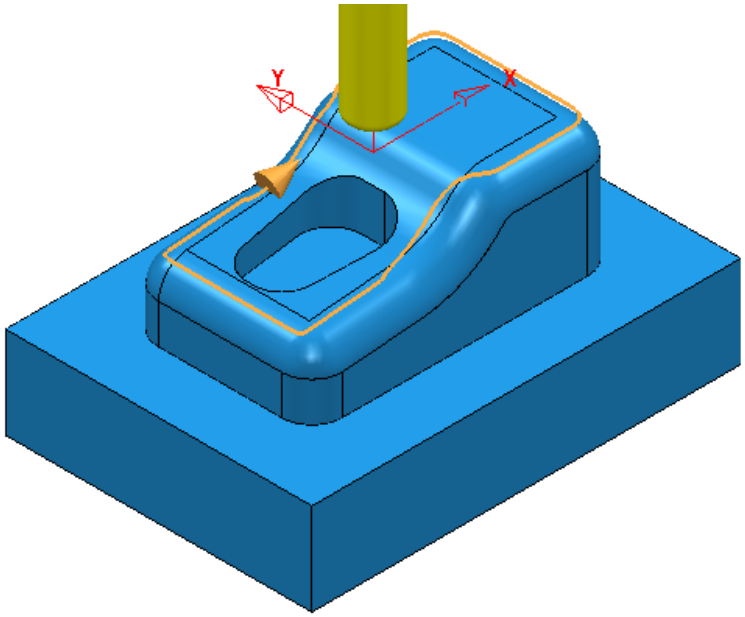

5 Select **Calculate** to create the **toolpath** then **Close** the dialog.

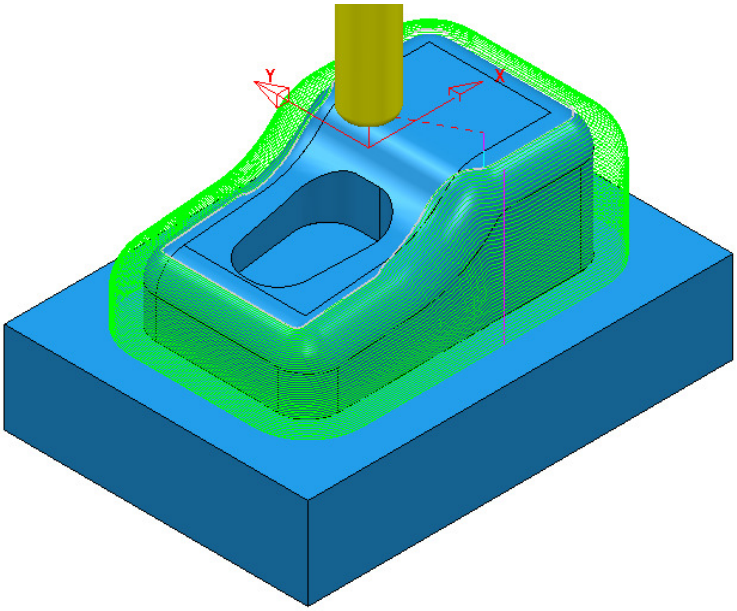

6 Select **File** > **Save** to update the stored **Project**.

 Copyright © Delcam Ltd

Wireframe Profile Machining

Wireframe Profile machining is designed to machine to the left or right of the selected ***curves*** of a 3D Wireframe. The following example is a pressing that requires the outer form and recesses to be finish profiled. As the main imported model is in STL (triangle) format it is incompatible with **Boundary** options that operate on ***selected surfaces***. It is also impossible to create the necessary 3D Wireframe **curves** direct from the **STL model** in **PowerMILL**. To resolve, the stored 3D Curves will be imported into a pattern to be applied in the **Wireframe Profile Machining** strategy.

1 Select **File** - **Delete All** and **Tools** - **Reset Forms**.

2 Select **File** and **Import** the **Model**:

.....\PowerMILL_Data\Models\3D-Curve-TriModel.stl

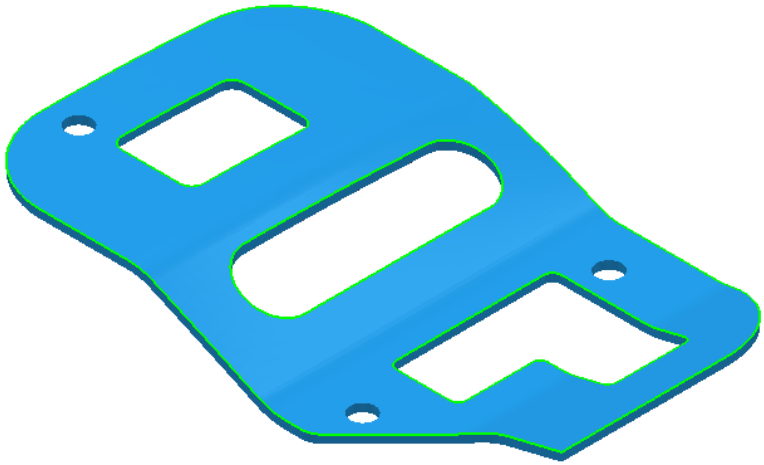

3 Select **File** > **Save Project As**:

.....\COURSEWORK\PowerMILL-Projects\3D-WireframeProfile

4 Create a Dia 5 End Mill named **EM5**.

5 Create an empty **Pattern**, right-click on it, and from the local menu, select **Insert** > **File**:

.....\PowerMILL_Data\Models\3D-Curve-Wire.dxf

6 **Rename** the **Pattern** as **3Dwire**.

7 With the left mouse click on the **model** to select it.

8 In the **PowerMILL** ***explorer***, right-click on **Workplanes** and from the local menu, select **Create** and **Orientate Workplane** - **Workplane at Bottom of Selection**.

9 **Rename** the **Workplane** as **MC-Datum**.

10 Right-click on the **Workplane** (**MC-Datum**) and from the local menu, select **Workplane Editor** to open the **Workplane Editing** toolbar.

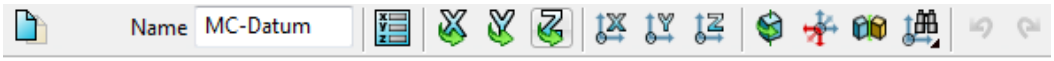

11 Click **Twist about Z** to open the following dialog.

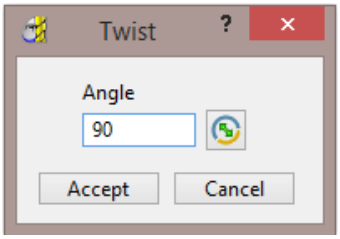

12 Enter the value **90** and click **Accept**.

13 Click on the **Workplane Editor** toolbar to accept the changes and **Close**.

14 **Activate** the **workplane** (**MC-Datum**) and select an **ISO 1** view.

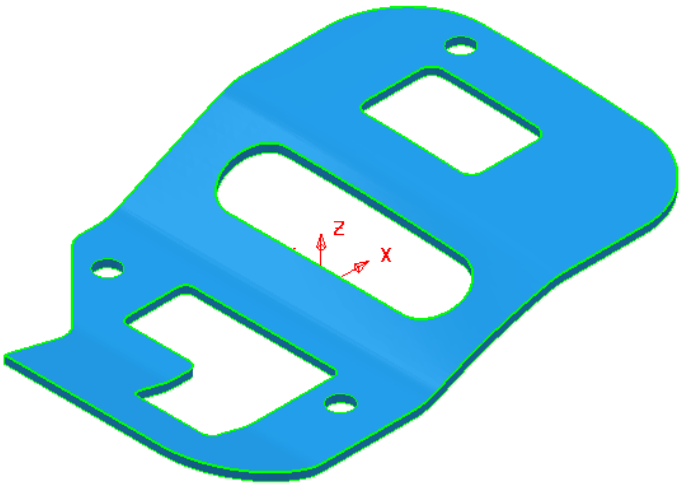

*The changes will not be physically active until the **Workplane Editor** toolbar has been **closed.***

15 **Calculate** a **Block** using ***Defined by*** **Box** and ***Type*** **Model**.

16 ***Lock*** the **Maximum Z** value only and then input an **expansion** value of **10** before re-selecting **Calculate**.

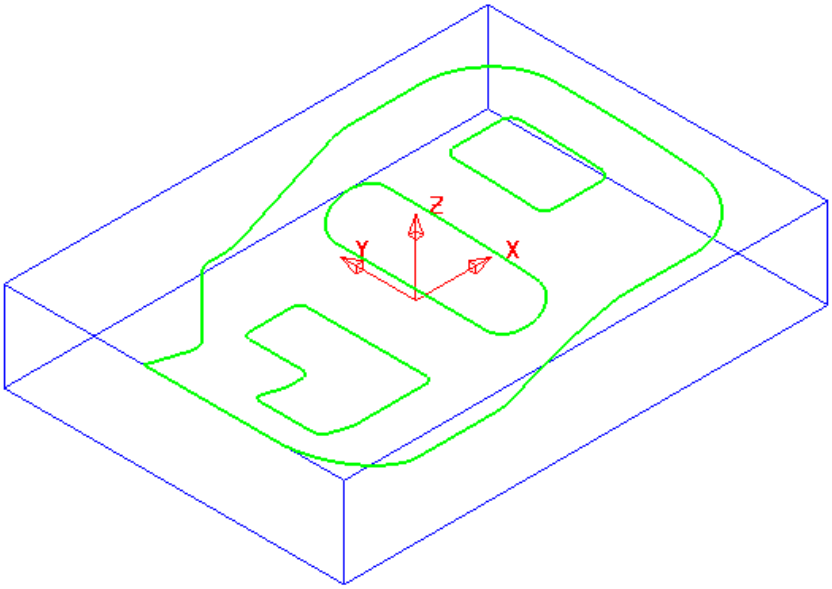

 Copyright © Delcam Ltd

The final task prior to machining is to check the directions of the **Pattern** segments and to **reverse** any that will cause the tool to machine on the wrong side of a profile.

17 Right-click on the **Pattern** (***3Dwire***) and from the local menu, select **Instrument** to display directional arrows on the individual segments.

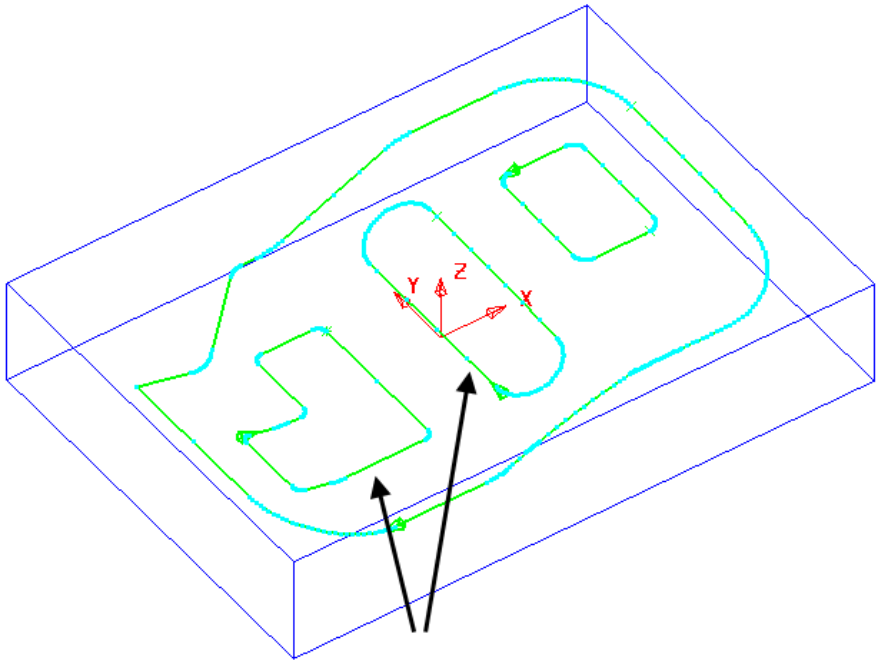

Two of the segments (indicated above) must be reversed for the **Wireframe Profile Machining** to ***Climb Mill*** to the left of the direction while remaining inside the aperture forms on the **STL model**.

18 Select the 2 **segments** (arrowed on the previous diagram) and from the local **Pattern** menu apply **Edit** > **Reverse Selected**.

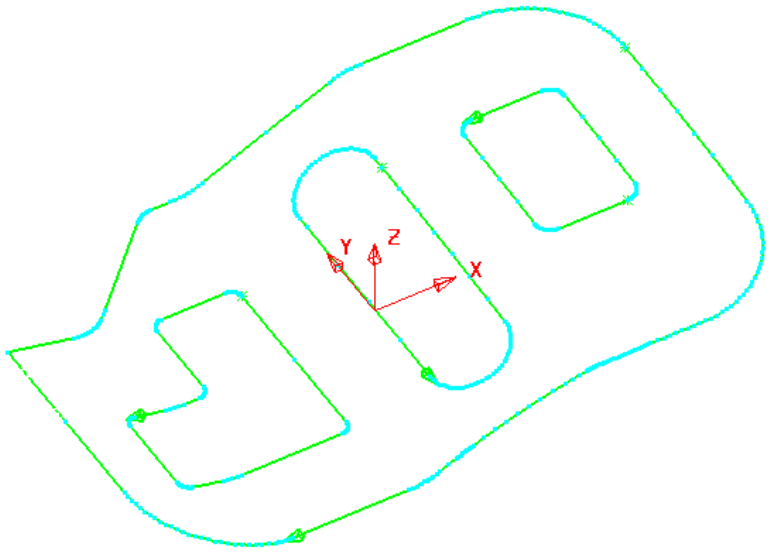

19 **Calculate** the **Rapid Move Heights** using the default settings.

20 Select the **Strategy Selector** and select the **Finishing** tab in the dialog.

21 Select the **Wireframe Profile Machining** strategy and enter data exactly as shown on the following 2 pages of the dialog.

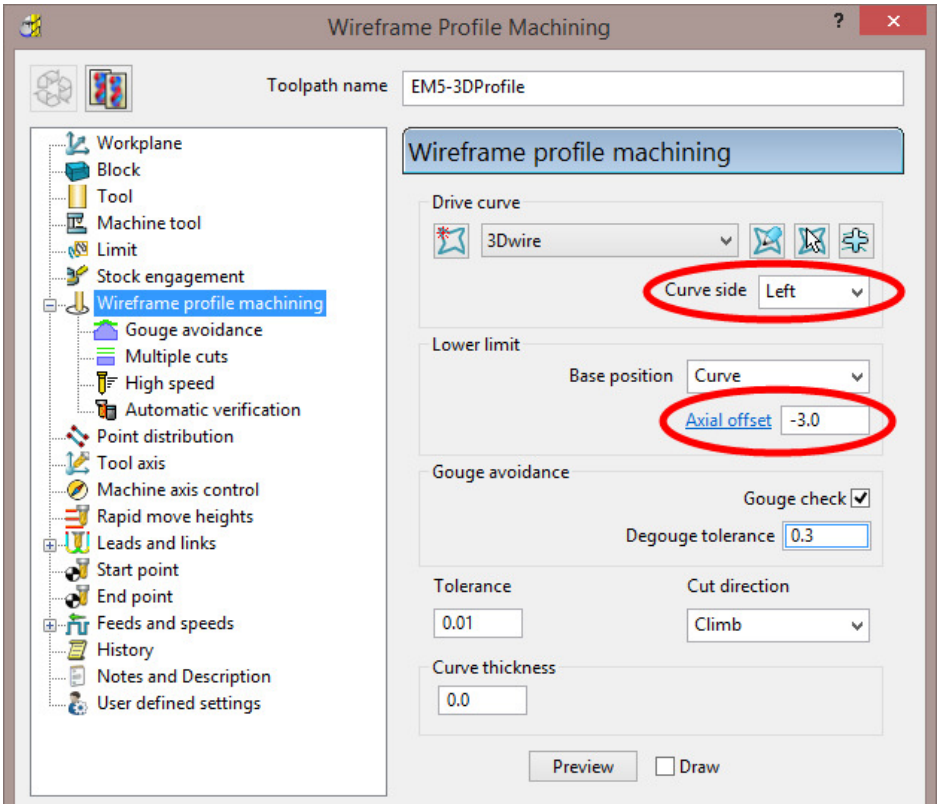

Curve side controls which side of the **Pattern** segment direction the tool operates.

Axial offset controls the depth of machining below the **wireframe curves**.

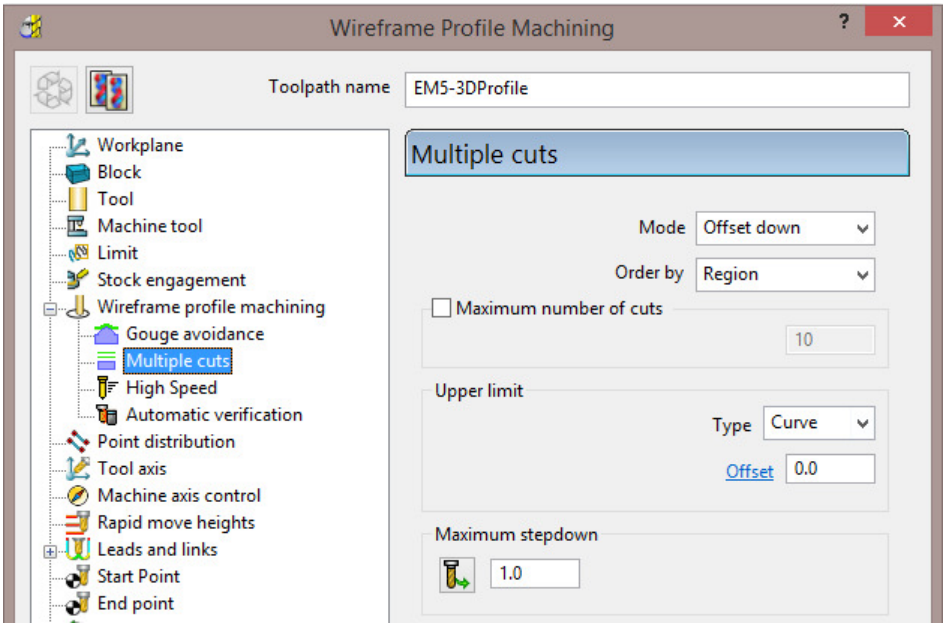

22 Select **Calculate** to create the **toolpath** and then **Close** the dialog.

Copyright © Delcam Ltd

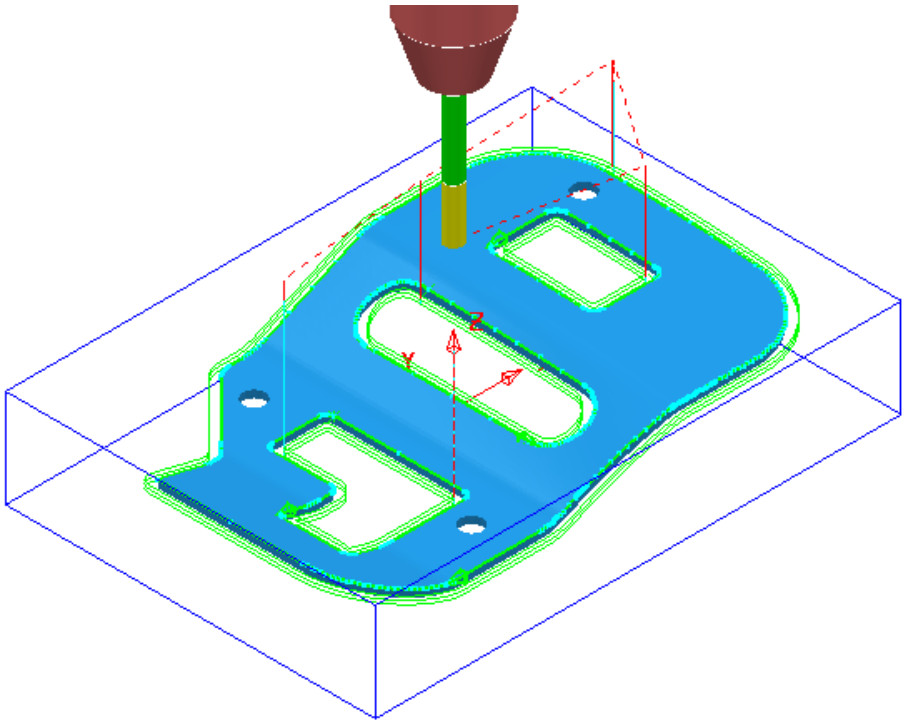

The **Wireframe Profile Machining** performs the profiling of the Pattern segments in 3D.

23 Select **File** > **Save** to update the stored **Project**.

Copyright © Delcam Ltd

16 Component Thickness

The **Component Thickness** options enable the user to apply varying **Thickness** and **Machining Mode** options to different parts of the component. These can be pre-defined as default settings in the **Thickness Preferences** dialog ready to copy into individual toolpath strategies. They can also be defined independantly within individual toolpath strategies using the **Component Thickness** dialog.

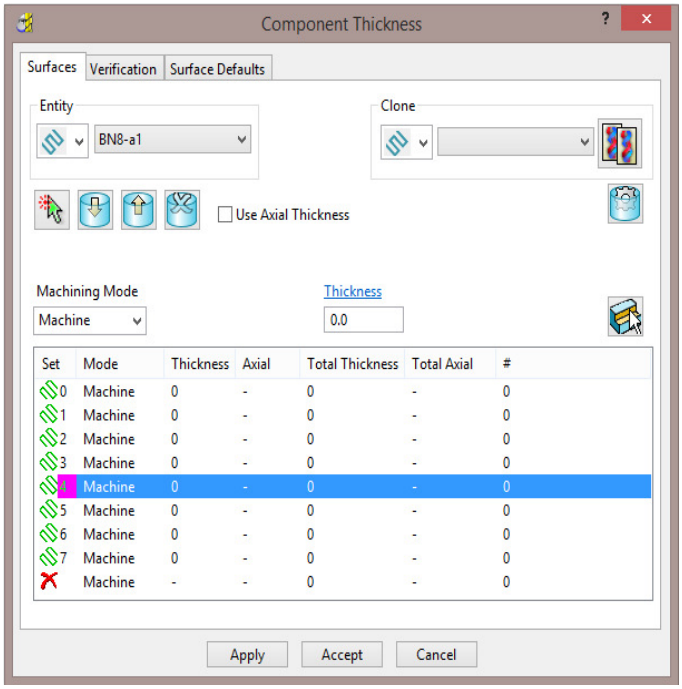

The **Component Thickness** tab allows individual **surfaces** or **solid faces** to be assigned with different **thickness** values (***Axial*** and ***Radial***) within a **toolpath**.

Other important features in this dialog include the **Machining Mode** options, **Ignore** or **Collision** to control ***machining status*** on selected parts of the component. This is available from the pull-down list consisting of three options:

- **Machine** (default) is used to define specific areas of the component to be machined with a different **Thickness** to that that in the main strategy dialog.
- **Collision** is used to define areas of the component to be avoided by the machining process (such as a clamp).
- **Ignore** is used to define areas of the component to be made invisible to the machining process so that the toolpath will pass through them (such as a blanking surface used to prevent toolpath moves into a hole or pocket during earlier machining strategies).
- The **Component Thickness** options are also available in **Boundary** creation options that include an active **Tool** as part of the calculation.

Component Thickness Example

1 Select **File** > **Delete all** and **Tools** > **Reset Forms**.

2 From **File** > **Open Project** select the read-only **Project**:

.....\PowerMILL-Data\Projects\CompThic_Start

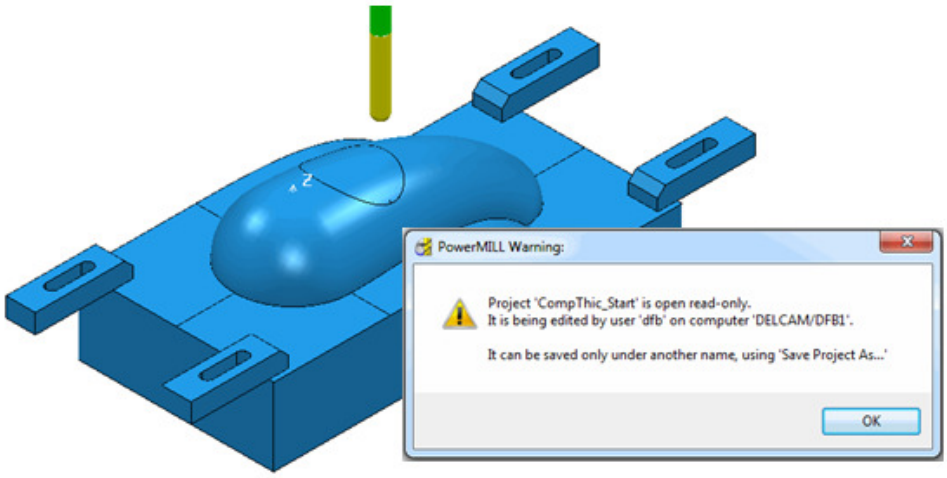

The **Project** contains an unprocessed Interleaved **Constant Z** machining strategy along with a Dia 8 Ball Nosed tool and all essential parameter settings.

3 Select **File** > **Save Project As**:

.....\COURSEWORK\PowerMILL-Projects\CompThickness-1

*To make selection easier the **Clamps** will be transferred to a new **Level** (**Clamps**) while the **split surfaces** will be copied to a new **Set** (**Splits**).*

4 In the **PowerMILL *explorer***, create a new **Level** and rename it as **Clamps** and then create a new **Set** and rename it as **Split**.

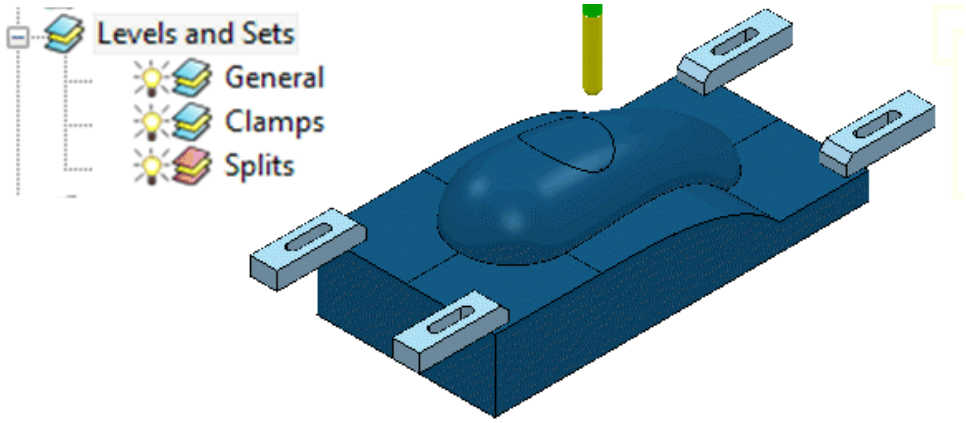

5 With the ***clamp* surfaces** selected, right-click on the **Level** named **Clamps** in the **PowerMILL *explorer*** and from the local menu select, **Acquire Selected Model Geometry**.

*It will be easier to **select** and **Blank** (**Ctrl J**) all the other **surfaces** first before simply dragging a box over all of the remaining **clamp surfaces**.*

 Copyright © Delcam Ltd

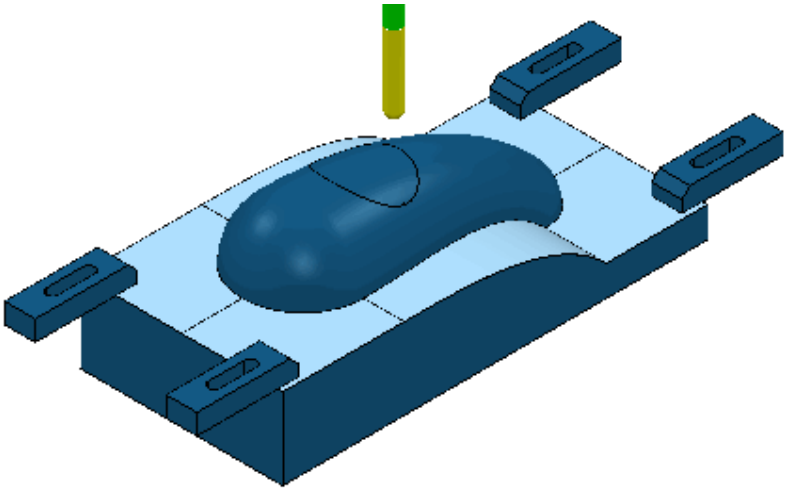

6 With the ***split* surfaces** selected, right-click on the **Set** named **Splits** in the **PowerMILL *explorer*** and from the local menu select, **Acquire Selected Model Geometry**.

7 In the **PowerMILL *explorer*** switch off the light bulb next to the **Set** named **Splits** (This is to prevent them still being displayed if the light bulb for the **Level *General*** is still switched on).

8 In the **PowerMILL *explorer***, right-click on the unprocessed, **Toolpath *BN8-a1*** and in the local menu, select **Settings** to open the **Steep and Shallow Finishing** dialog.

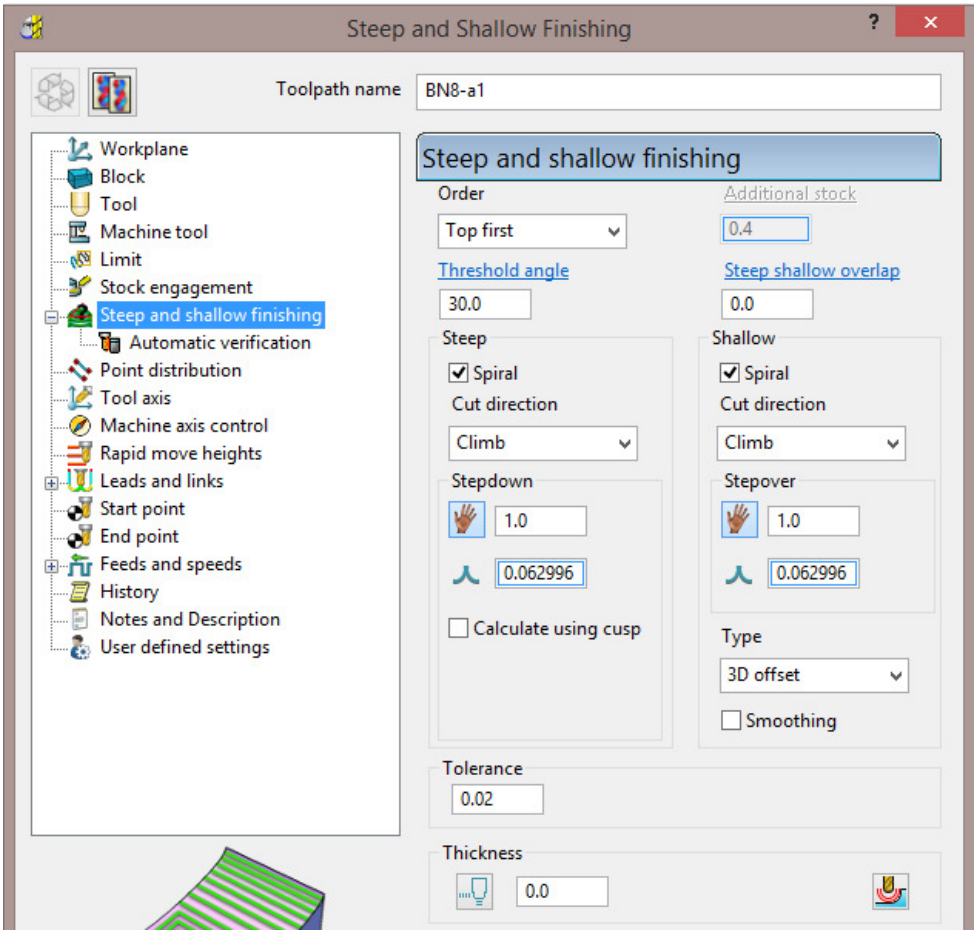

9 Select **Component Thickness** to open the following form.

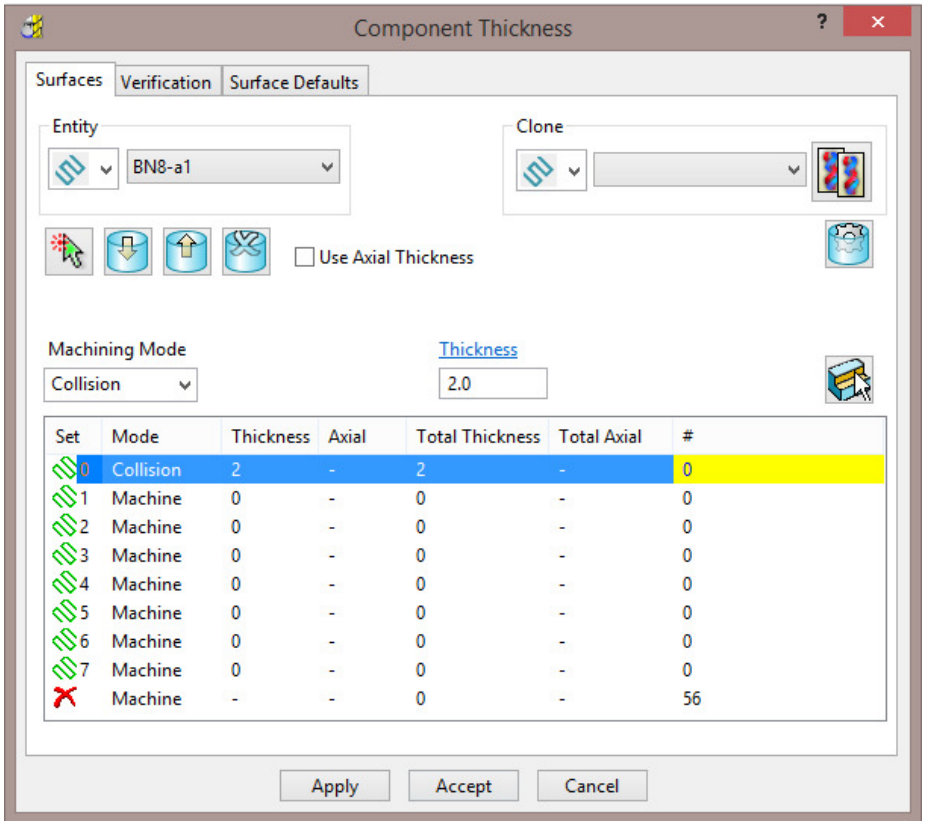

With the **Machining Mode** set to **Collision**, a **Thickness** value of **2** will be applied. At this safe distance the active tool will either ***retract*** or ***profile*** around the clamps.

10 Select the 1st row of the **Component Thickness** table and a square, colour coded symbol (in this case blue) will appear at the start of the row.

11 With the 1st row still selected, change the **Machining Mode** to **Collision** with a **Thickness** value of **2**.

12 Select **Smart Selection** to open the following dialog:

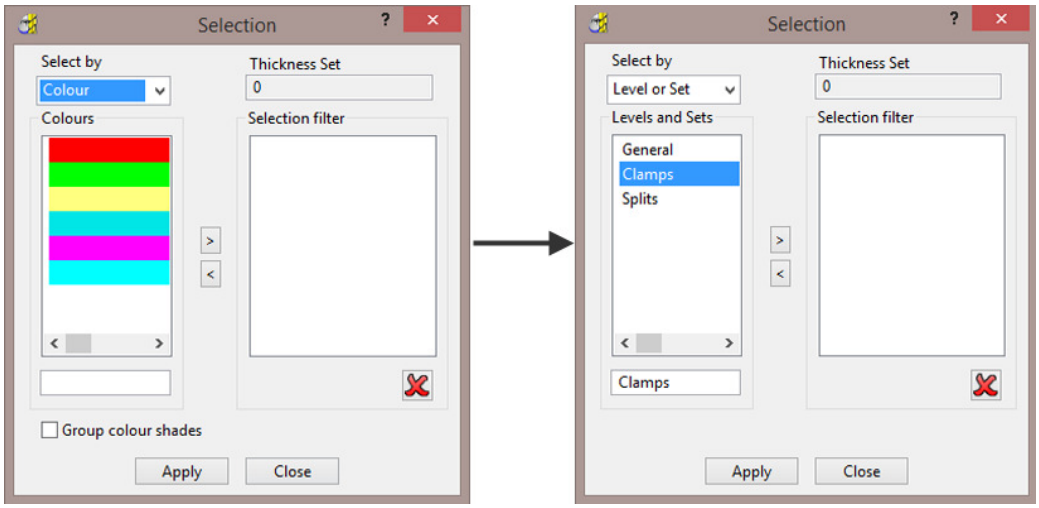

13 Switch **Select by** from **Colour** to **Level or Set**.

14 With **Clamps** selected in the **Levels or Sets** box click to acquire the clamp surfaces to the 1st row of the main dialog, and then **Close** the ***Selection*** dialog.

 Copyright © Delcam Ltd

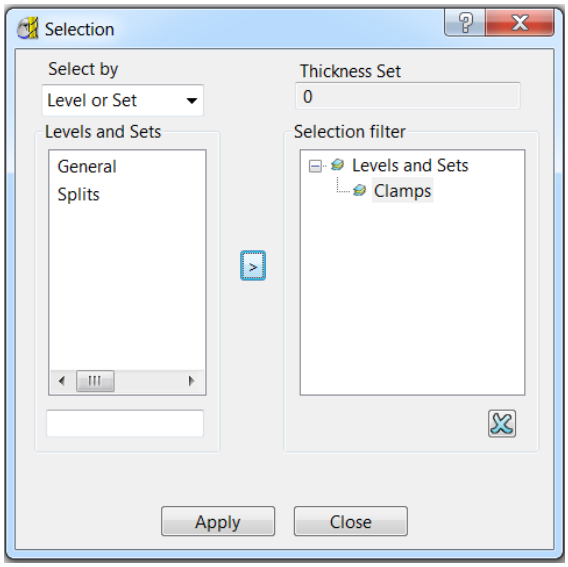

The 44 ***Clamp Surfaces*** are acquired to the 1st row.

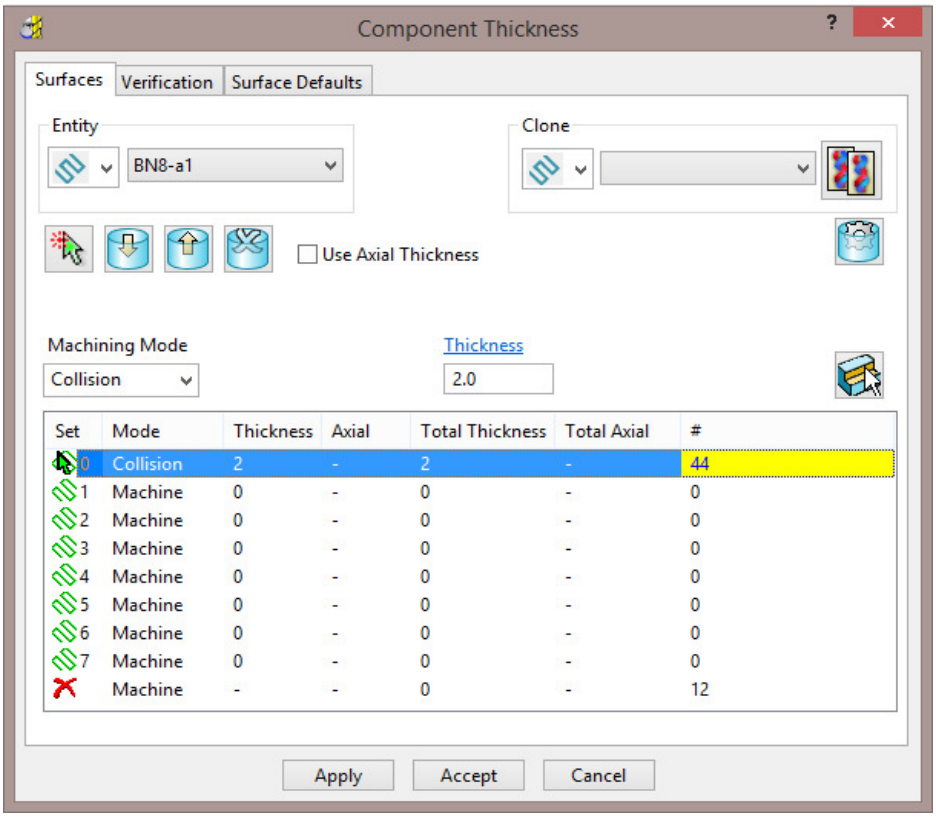

15 **Apply** the **Component Thickness** dialog to update the settings.

*In the above **Component Thickness** dialog, it is not necessary to use the 8 available rows in sequential order!*

16 Select the 2nd row and a square, colour coded symbol (in this case purple) will appear at the start of the row.

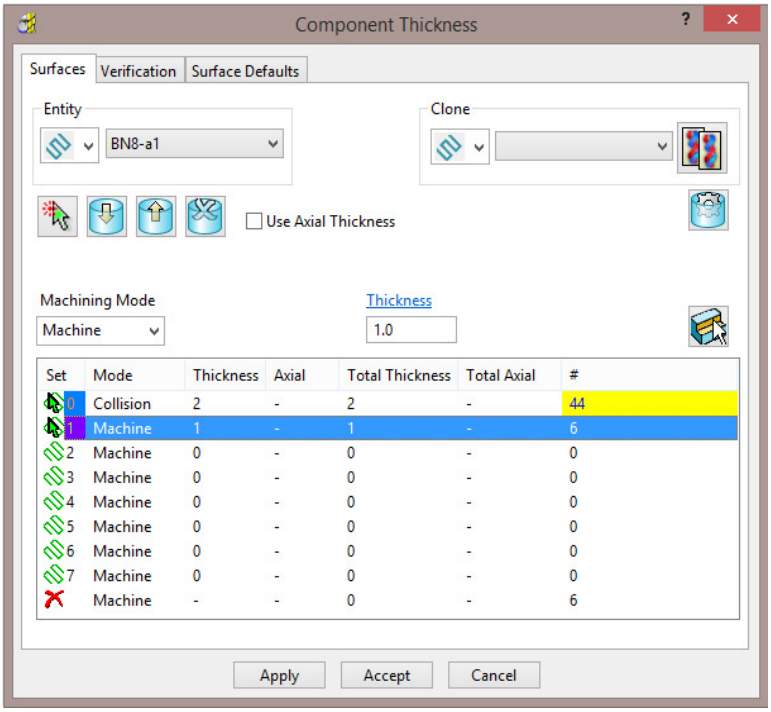

The **Thickness** value of **1.0** will control how much stock is left on the acquired ***split surfaces*** for this strategy.

*This is in addition to a **Thickness** value specified in the main machining strategy dialog. In the above **Component Thickness** dialog the sum of these is displayed in the **Total Thickness** column.*

17 With the 2nd row still selected, keep the **Machining Mode** as **Machine** but with a **Thickness** of **1**.

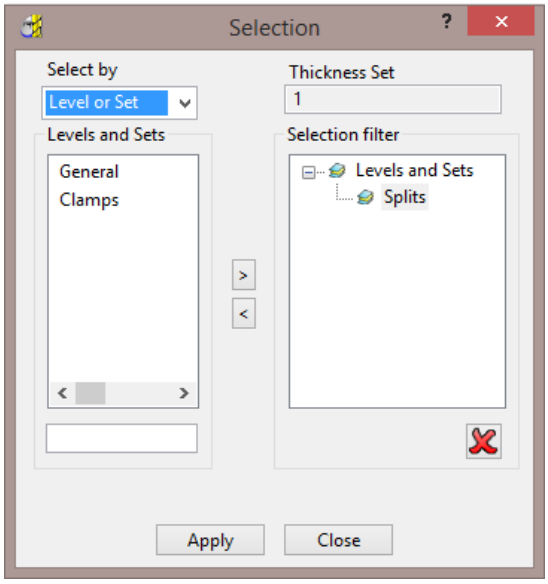

18 In **Smart Selection** select **Splits** in the **Levels or Sets** box and click the arrow icon to assign them in the second row of the main dialog.

 Copyright © Delcam Ltd

19 Select the 4th row and a square, colour coded symbol (in this case orange) will appear at the start of the row.

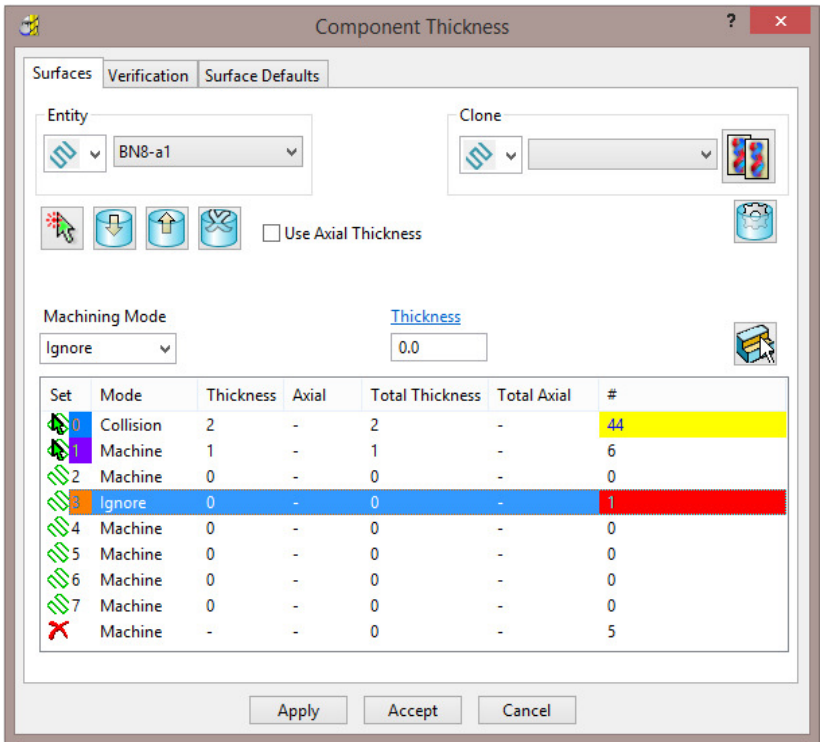

The ***cap surface*** must be ignored during the creation of this toolpath.

20 With the 4th row still selected, change the **Machining Mode** to **Ignore** with a **Thickness** value of **0**.

21 Use the ***left mouse key*** to manually select the ***cap surface*** and click on **Acquire Components** to include it in the 4th row.

22 **Apply** the **Component Thickness** dialog.

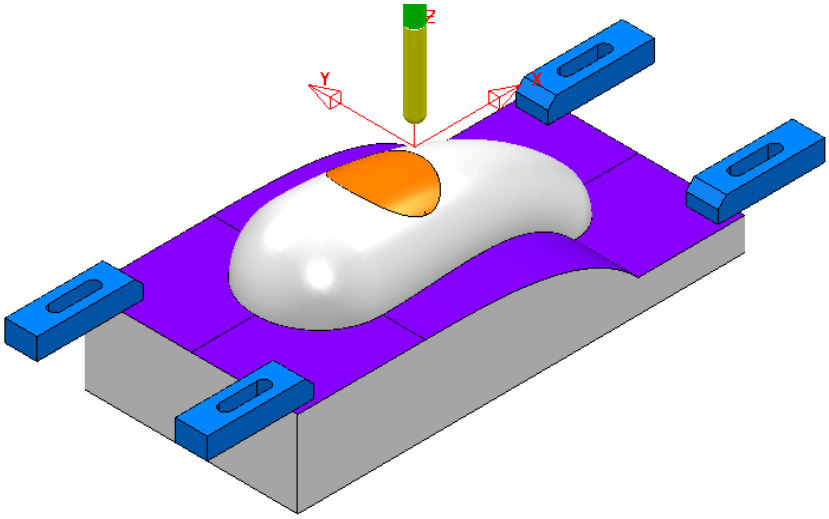

While the **Component Thickness** form is open, **Toolpath Thickness Shade** mode will be active. Acquired **surfaces** are shaded in the same colour as the row.

23 In the **Viewing** toolbar select the **Toolpath Machining Mode Shade**.

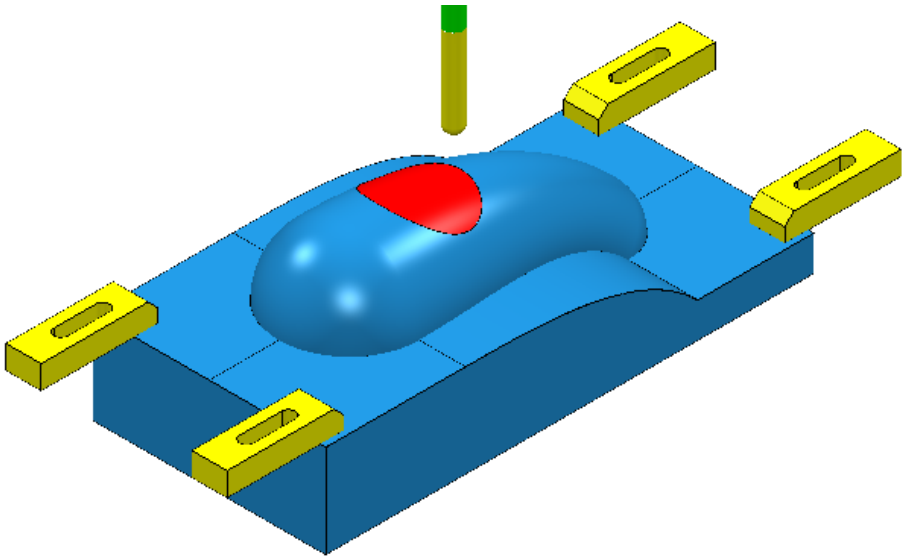

This time, relevant parts of the **model** are colour coded in ***Red*** (**Ignore**) or ***Yellow*** (**Collision**). Where applicable, these colour codes also appear at the end of a row.

24 **Accept** the **Component Thickness** dialog.

25 Select **Calculate** to create the toolpath and then **Close** the dialog.

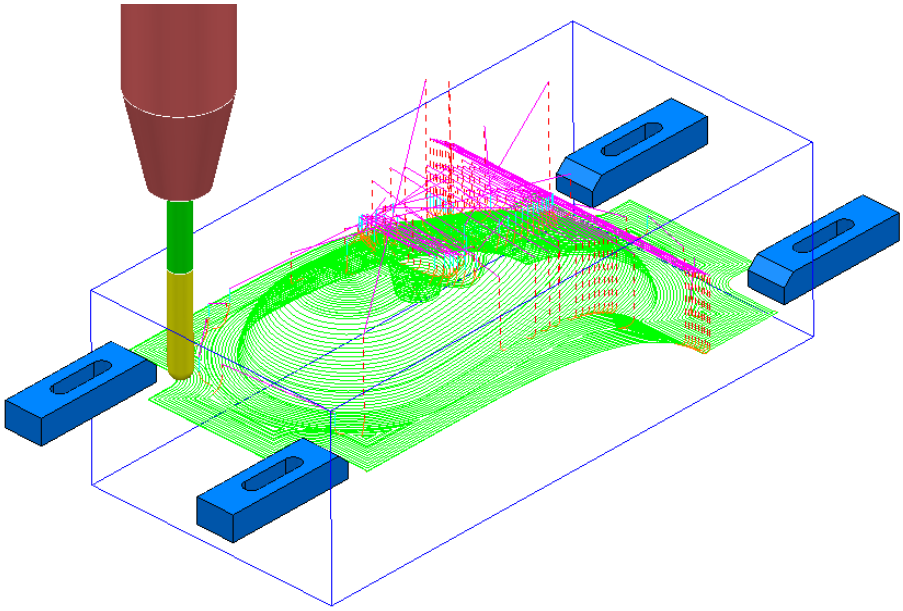

26 Select **File** > **Save** to update the stored **Project**.

27 Do not close the **Project** as it will be continued in the next section.

 Copyright © Delcam Ltd

Cloning the Component Thickness settings from an existing Toolpath

A **Corner Finishing** strategy ***BN5-a1*** will now be created using 'cloned' **Component Thickness** settings as used in ***BN8-a1***.

1 From the **Toolpath Strategies** select the **Finishing** option, **Corner Finishing**, and input settings exactly as shown below:

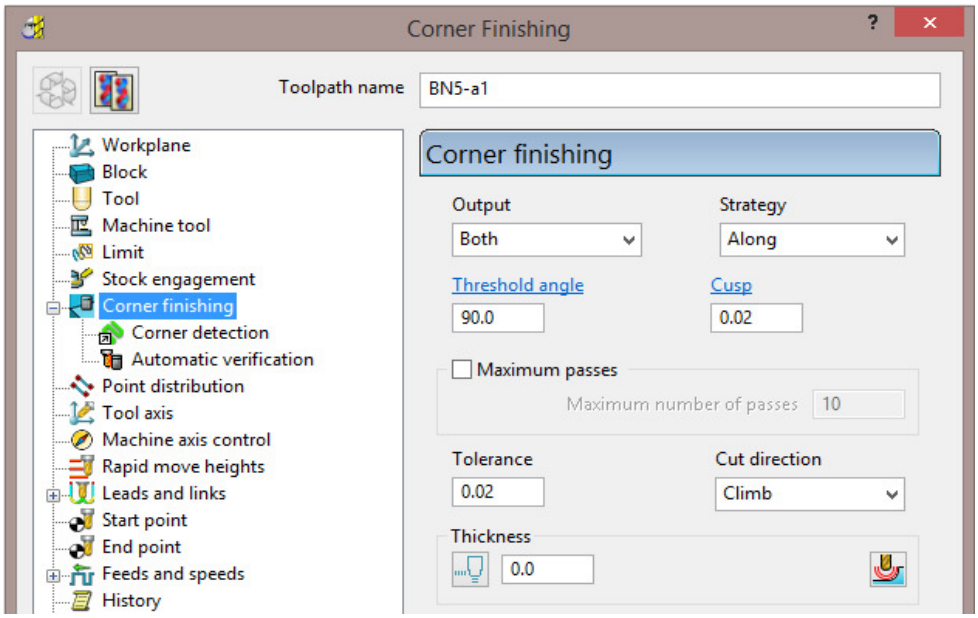

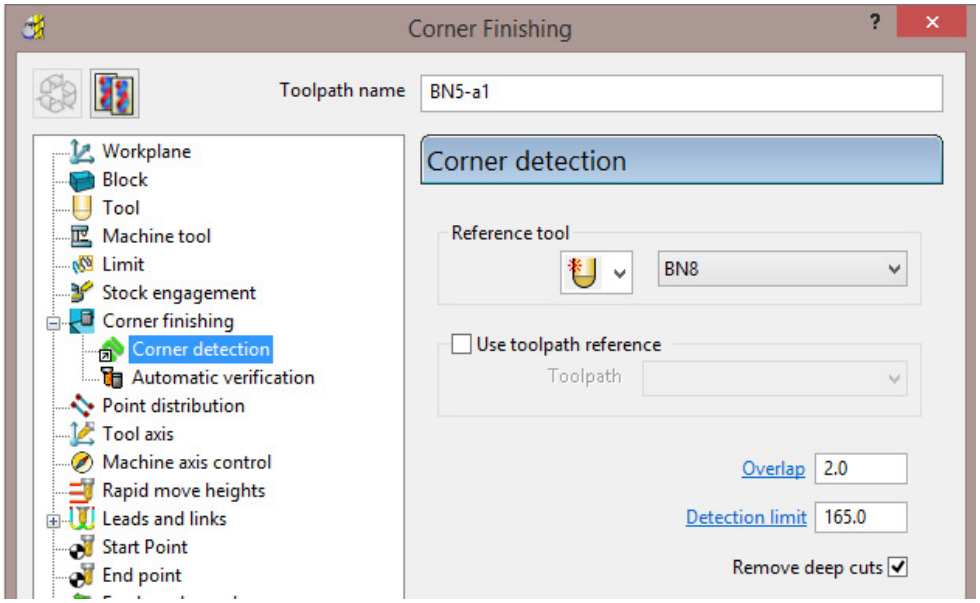

2 Select **Calculate** and have a look at the resultant **toolpath** in the graphics area.

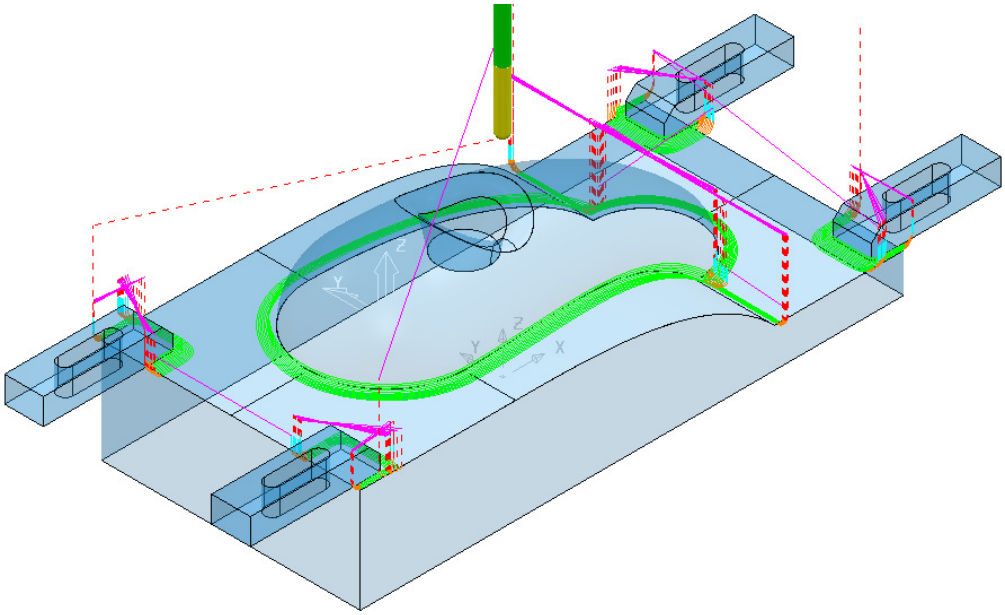

For the moment the **Corner Finishing** strategy is unable to access the base of the central pocket and has also produced unwanted ***tool tracks*** around the front edge of the clamps. This will be rectified by ***cloning*** the **Component Thickness** from the toolpath ***BN8-a1***.

3 Back in the **Corner finishing** page, select **Component Thickness** .

4 In the **Clone** area of the form use the ***downward chevron*** to display and then select the ***toolpath Bn8-a1***.

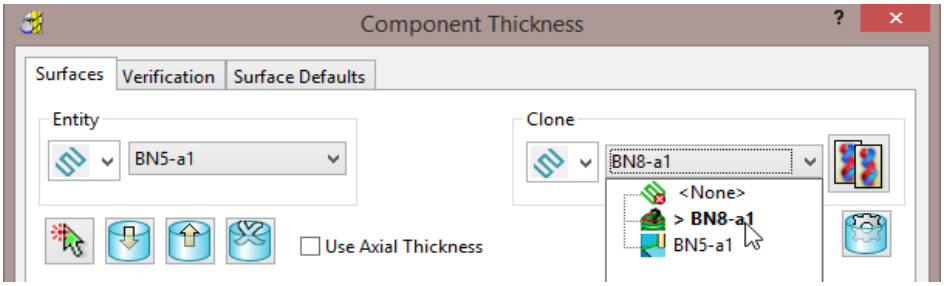

5 Select the **Copy Thickness Data** icon to ***Clone*** the **Component Thickness** settings into the dialog.

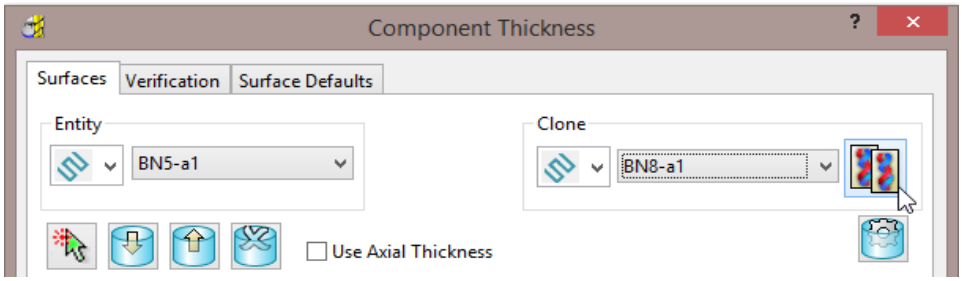

 Copyright © Delcam Ltd

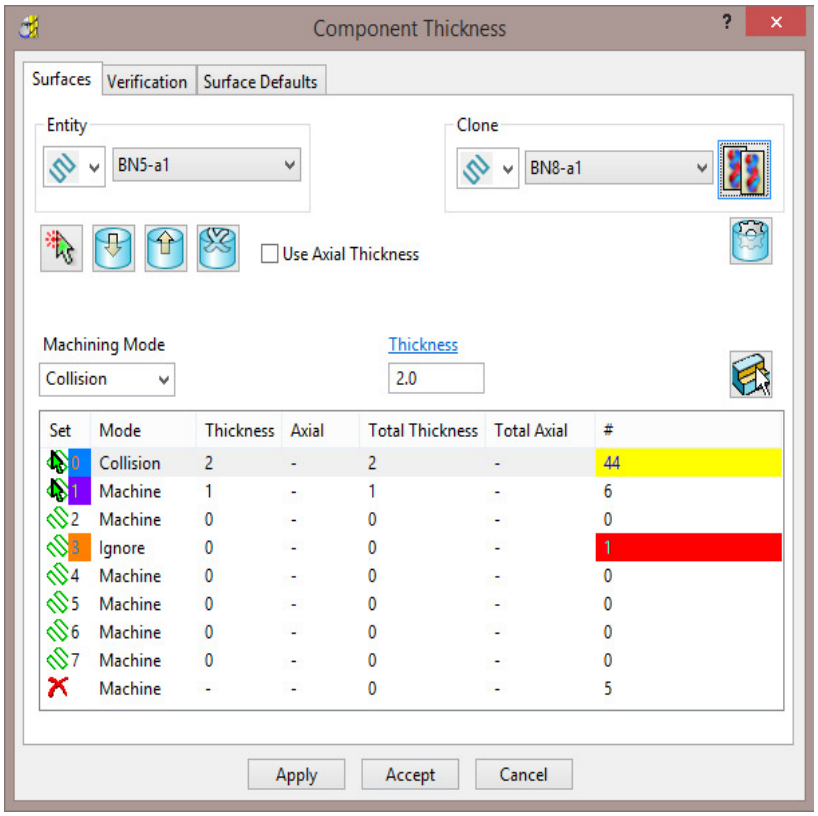

The **Component Thickness** settings originally used in **BN8-a1** are now ***cloned*** into the strategy dialog for ***BN5-a1***.

*The process is not complete until the **Apply** button has been clicked.*

6 Select **Apply** followed by **Accept** to fully update the **Component Thickness** settings in the strategy ***BN5-a1***.

7 **Calculate** the **Corner Finishing** strategy and then Close the dialog.

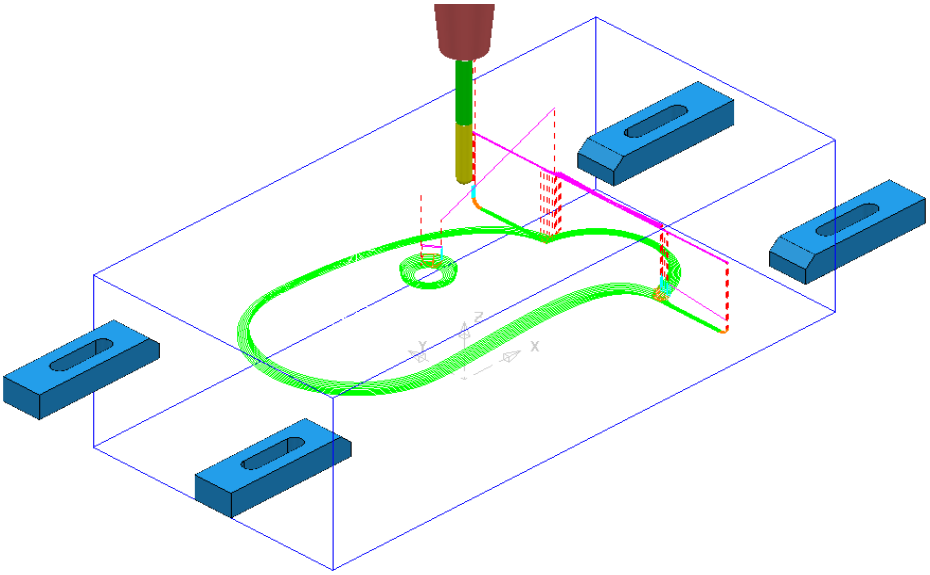

8 Select **File** > **Save Project**

This will update:-

.....\COURSEWORK\PowerMILL-Projects\CompThickness-1

Modification of existing strategies to allow for interchangeable clamping bolts.

The following **Project** already includes some **Strategies** to create the 3D component form on a pre-machined material **Block**. All except the initial ***Face Milling*** strategy need to be modified to accommodate 2 interchangeable pairs of clamping bolts aligned along X and Y respectively.

1 Select **File** > **Delete all** and **Tools** > **Reset Forms**.

2 From **File** > **Open Project** select the read-only **Project**:

.....\PowerMILL-Data\Projects\CompThic-2_Start

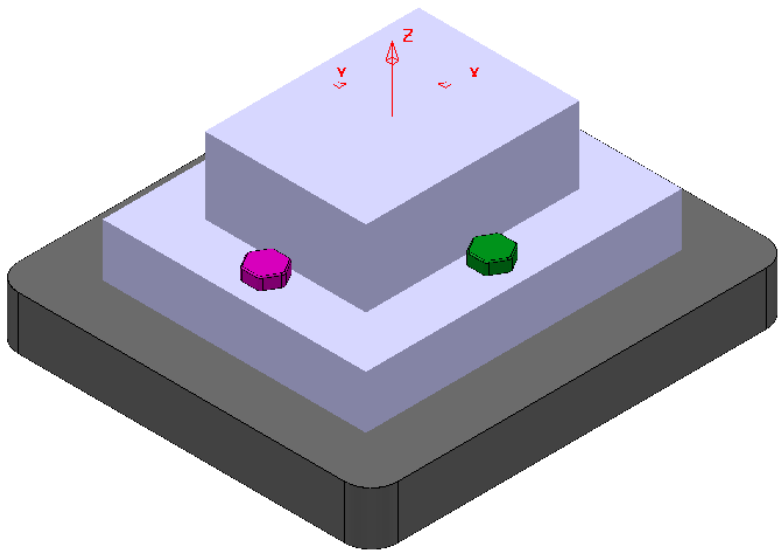

The individual parts (Component Model, Capping Surfaces, Fixture Plate, and Clamping Bolts) are already acquired to suitable **Levels**.

3 Select **File** > **Save Project As**:

.....\COURSEWORK\PowerMILL-Projects\CompThickness-2

4 Select an **ISO 1** view (as shown in the above image).

5 In the **PowerMILL explorer**, right mouse click on the **Toolpath** ***EM25-FaceMill-Top*** and from the local menu select **Activate**.

6 In the **PowerMILL explorer**, right mouse click on the **Toolpath** ***EM25-FaceMill-Top*** and from the local menu select **Simulate from Start**.

*Before performing a **ViewMILL** simulation the **Block** will be modified to use a model of the pre-machined material.*

 Copyright © Delcam Ltd

7 From the ***main*** toolbar select the **Block** dialog.

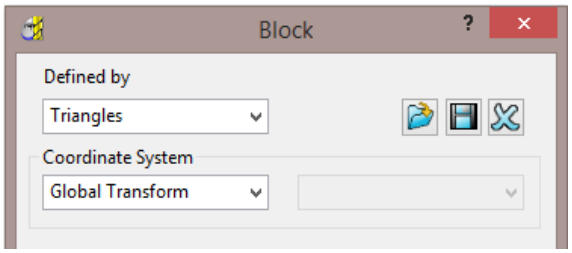

8 Select **Defined by** > **Triangles** and **Coordinate System** > **Global** before selecting the option **Load block from file**.

9 In the ***Open Block from Triangles*** dialog browse to:- **C:\Training_Data\PowerMILL_Data\Triangles\CompThic-2_Block.stl** and select **Open**.

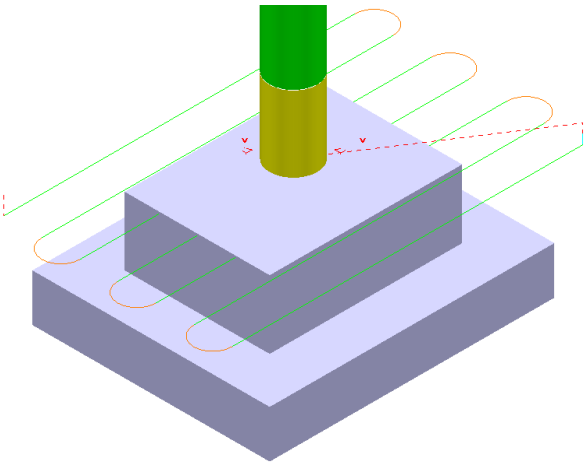

This **Block** definition is an accurate model of the pre-machined component.

10 Toggle into **ViewMILL** and select the **Rainbow Shaded Image**.

11 In the **Simulation** toolbar select the ***Play*** button.

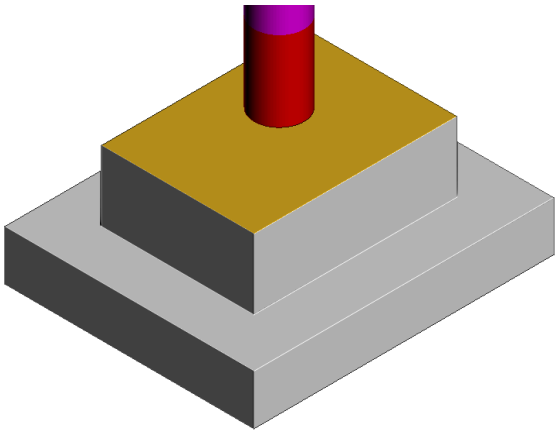

12 Select the **No Image** option to return to the **PowerMILL *window*** and for the time being disconnect **ViewMILL** from the **Simulation**.

13 From the **main** menu select the **Block** option and in the dialog move the **Opacity** slider all the way to the left (wireframe).

14 In the **Viewing** toolbar select the option **Multicolour Shade**.

15 **Activate** the **Toolpath *D16TR3-Rgh1***.

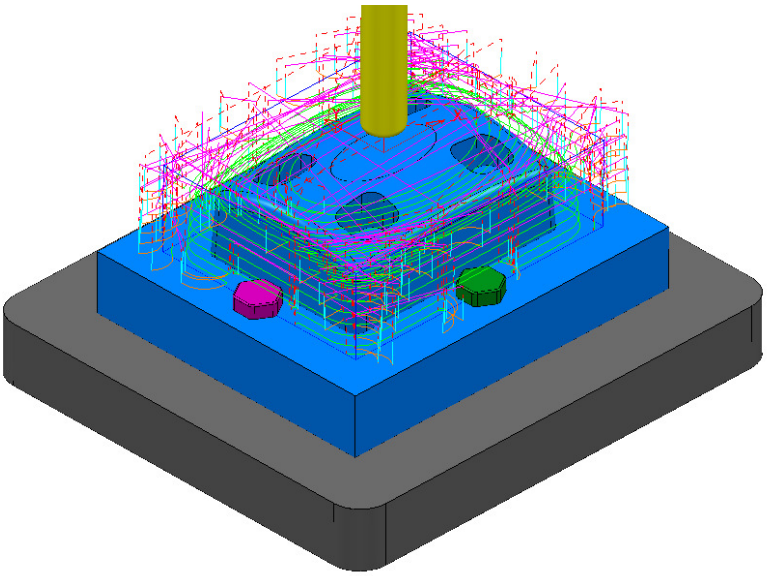

This toolpath will be modified to **Ignore** the ***purple***, clamping bolts along the X-Axis (These are to be physically removed when this toolpath is run).

This toolpath will also be modified to apply **Collision** status to the ***green***, clamping bolts from a 2mm distance.

16 Right mouse click on the **Toolpath *D16TR3-Rgh1*** and select **Settings** to open the **Model Area Clearance** dialog.

17 Select the ***Re-cycle*** option to enable editing to occur.

18 In the **main** page of the **Model Area Clearance** dialog, select the **Component Thickness** dialog .

19 In the dialog use **Smart Selection** to acquire the data stored on the **Level *ClampingBolts-X*** to one of the colour coded rows.

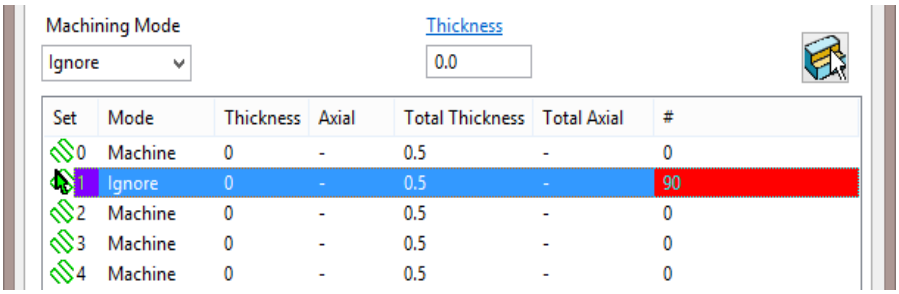

20 Set the row with ***Machining Mode*** > **Ignore**.

 Copyright © Delcam Ltd

21 Select one of the other colour coded rows and use **Smart Selection** to acquire the data stored on the **Level *ClampingBolts-Y***.

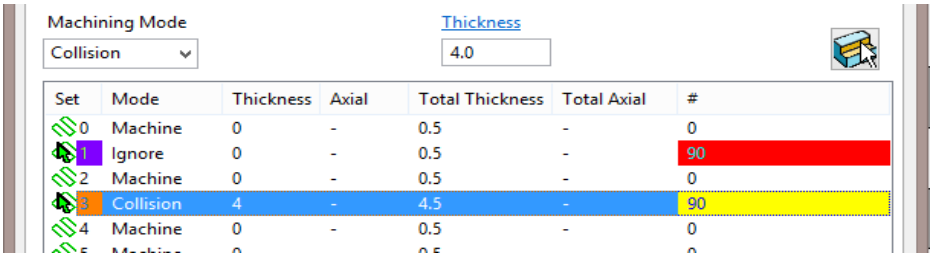

22 Set the row with ***Machining Mode*** > **Collision** with a **Thickness** > **2.0** and then select **Apply**.

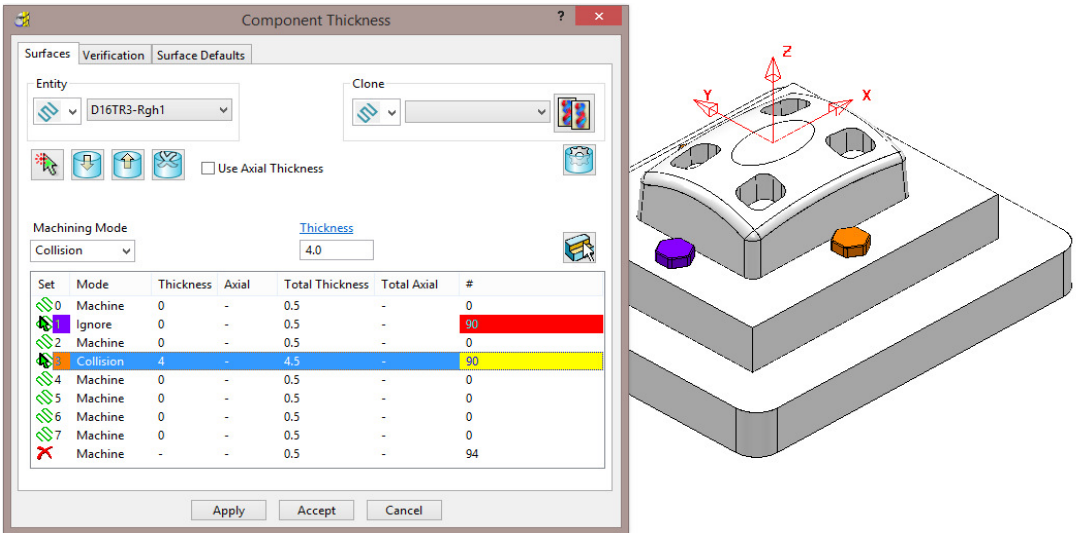

The parts of the model acquired to a row will be shaded in the same colour.

23 **Accept** the **Component Thickness** dialog and then **Calculate** the **toolpath**.

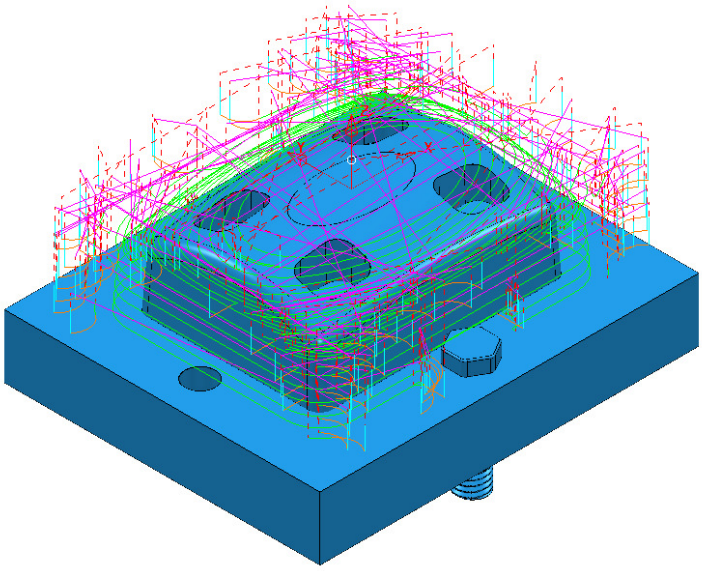

The updated **toolpath** (***D16TR3-Rgh1***) now runs straight through the ***X-Axis*** clamping bolt area and clears the **Y-Axis** clamping bolts by a full 2mm.

We now require a copy of the **Toolpath** (***D16TR3-Rgh1***) that locally machines the remainder of the component in the clamping bolt area along the Y-Axis.

24 Right mouse click on the **Toolpath *D16TR3-Rgh1*** and select **Settings** to open the **Model Area Clearance** dialog.

25 Select the ***Make a Copy*** option and in the **Model Area Clearance** dialog rename it as ***D16TR3-Rgh2***.

*As the new **toolpath** is a direct copy, the **Component Thickness** settings will be exactly the same as in **D16TR1-Rgh1**.*

26 In the main page tick the **Rest machining** box and then open the **Rest** page of the dialog.

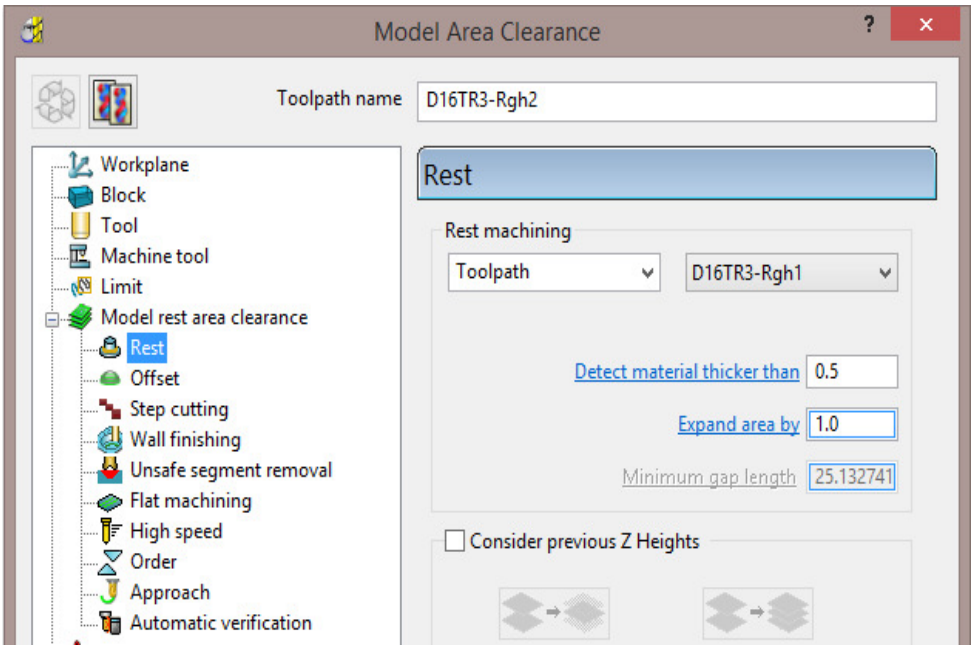

27 In the above dialog, insert the reference **Toolpath** > **D16TR3-Rgh1** and fill in the other values exactly as shown.

28 In the **main** page of the **Model Area Clearance** dialog, select the **Component Thickness** dialog .

29 Swap over the settings between the 2 existing rows (as shown below).

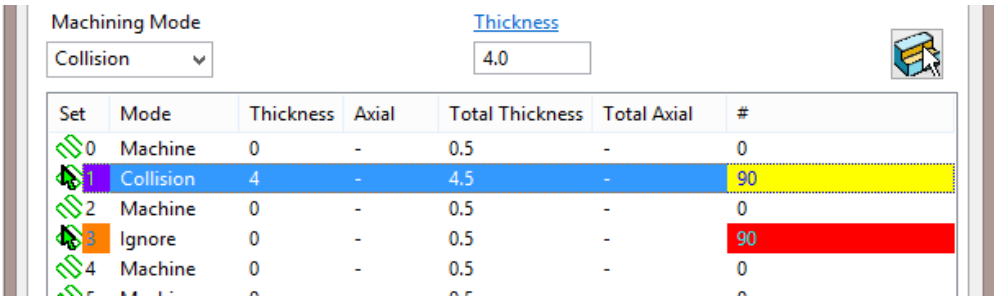

30 **Accept** the **Component Thickness** dialog and then **Calculate** the **toolpath**.

 Copyright © Delcam Ltd

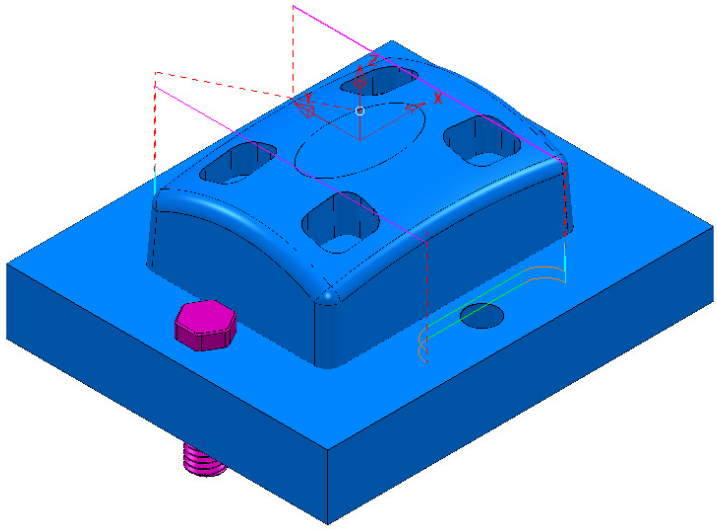

The updated ***Rest Roughing***, **toolpath** (***D16TR3-Rgh2***) now runs straight through the ***Y-Axis*** clamping bolts.

31 **Activate** the **Toolpath *BN10-Fin1*** and then select **Settings** from the local menu to open the **Steep and Shallow Finishing** dialog.

32 Select the ***Re-cycle*** option to enable editing to occur.

33 In the **main** page of the **Steep and Shallow Finishing** dialog, select the **Component Thickness** dialog .

34 In the ***Clone*** pull down select the **Toolpath *D16TR3-Rgh1*** and the click on the **Copy Thickness Data** icon.

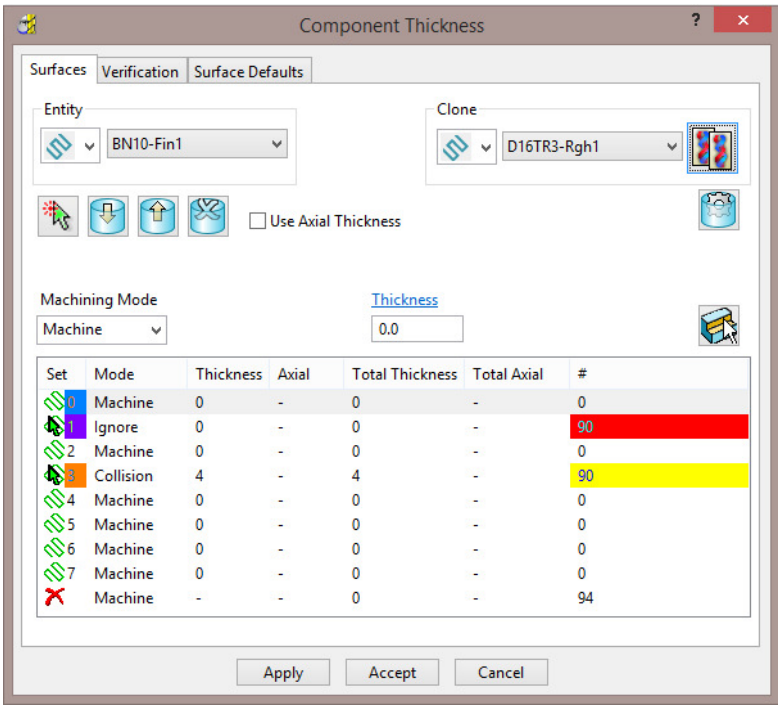

35 **Accept** the **Component Thickness** dialog and then **Calculate** the toolpath.

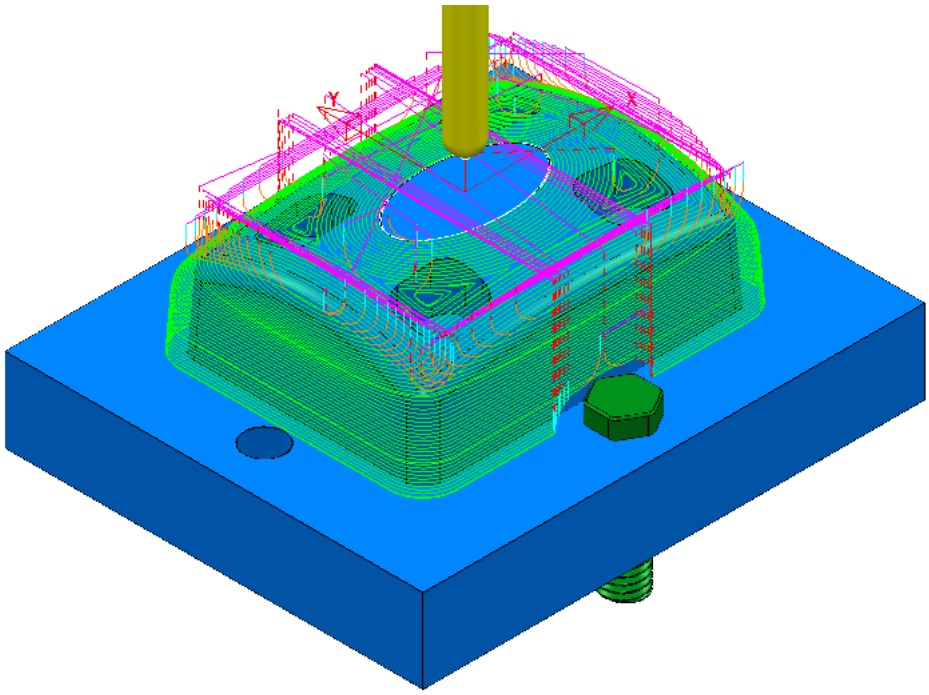

36 The updated **toolpath** (***BN10-Fin1***) now runs straight through the ***X-Axis*** clamping bolt area and clears the **Y-Axis** clamping bolts by a full 2mm.

The next stage is to create a copy of the above **toolpath** (***BN10-Fin1***) that locally machines the remaining areas within the two Y-Axis clamping bolts.

37 Right mouse click on the **Toolpath *BN10-Fin1*** and select **Settings** to open the **Steep and Shallow Finishing** dialog.

38 Select the ***Make a Copy*** option and in the **Model Area Clearance** dialog rename it as ***BN10-Fin2***.

*As the new **toolpath** is a direct copy, the **Component Thickness** all of the current settings will be exactly the same as in **BN10-Fin1**. In this case the required **Component Thickness** settings can be cloned from the **Toolpath D16TR3-Rgh2**.*

39 In the **main** page of the **Steep and Shallow Finishing** dialog, select the **Component Thickness** dialog .

40 In the ***Clone*** pull down select the **Toolpath *D16TR3-Rgh2*** and the click on the **Copy Thickness Data** icon.

41 **Accept** the **Component Thickness** dialog.

42 In the **Steep and Shallow Finishing** dialog select the **Block** page and ***lock*** both the **Min Z** value (-35) and **Max Z** value (0). Keep the **Block** page open.

43 In the **PowerMILL *explorer***, right mouse click on the **Level** named ***ClampingBolts-Y*** and from the local menu click on **Select All**.

 Copyright © Delcam Ltd

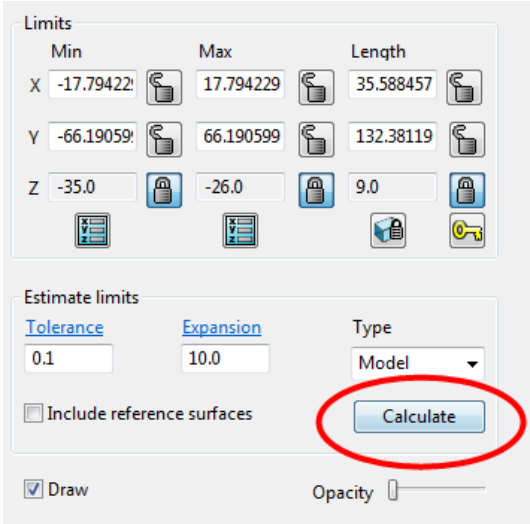

44 Back in the **Block** dialog enter an **Expansion** of **10** and **Calculate**.

45 ***Unlock*** the **Z Max** value and manually input the value **-26**.

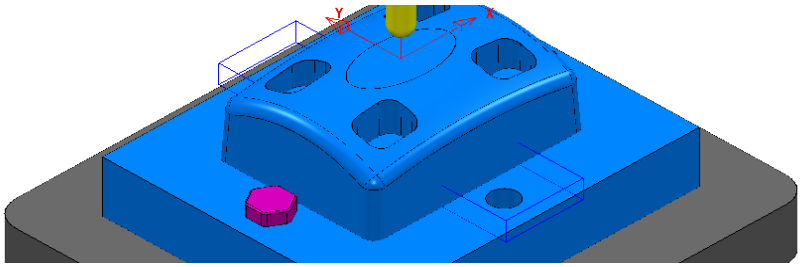

46 Finally select **Calculate** at the bottom of the main **Steep and Shallow Finishing** dialog to create the new **toolpath *BN10-Fin2***.

47 **Cancel** the **Steep and Shallow Finishing** dialog.

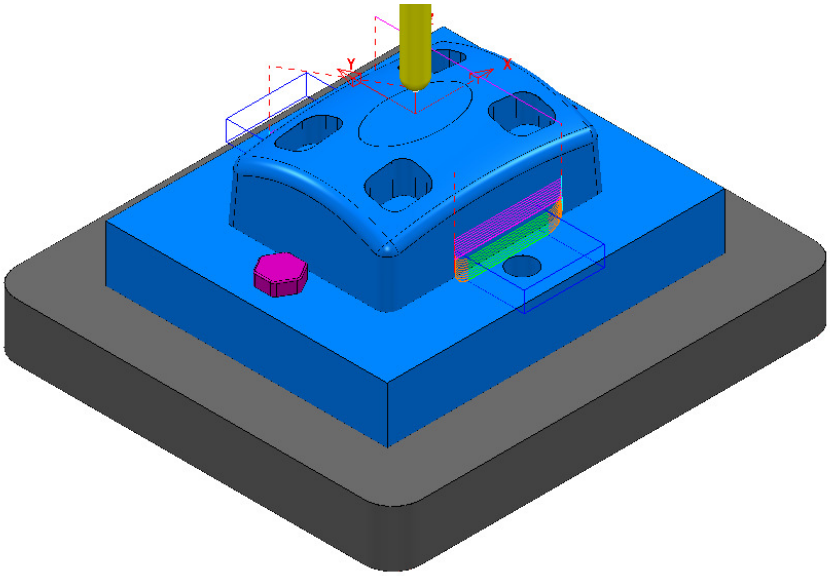

48 **Save** the **Project** (but do not close it).

Exercise

1 **Activate** the existing **Constant Z Finishing** toolpath ***D8TR1-Fin1***.

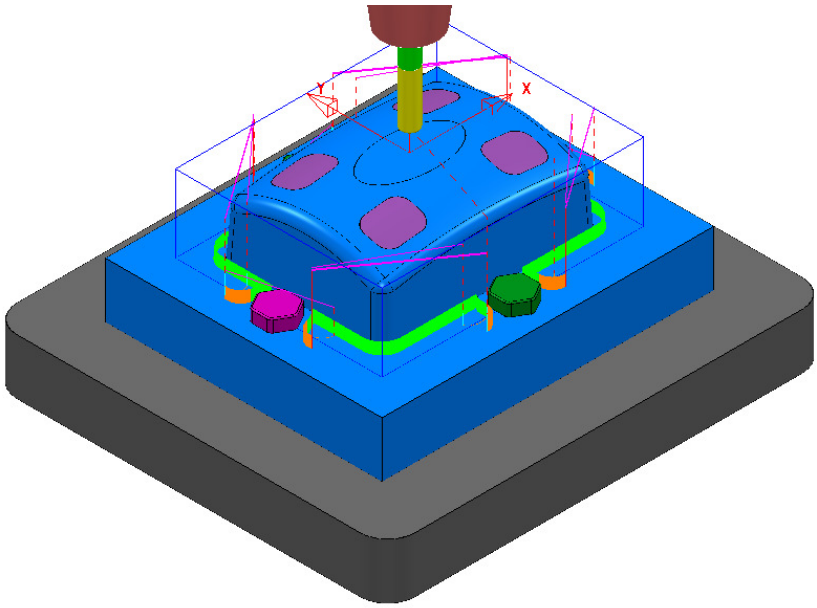

2 Select **Settings** and **Recycle** on the above toolpath.

3 Use the **Component Thickness** options to **Ignore** the **surfaces** on **Level *ClampingBolts-X*** (purple), and **Machine** with a **4mm thickness** around the **surfaces** on **Level *ClampingBolts-Y*** (green).

4 **Calculate** the changes to **toolpath *D8TR1-Fin1***.

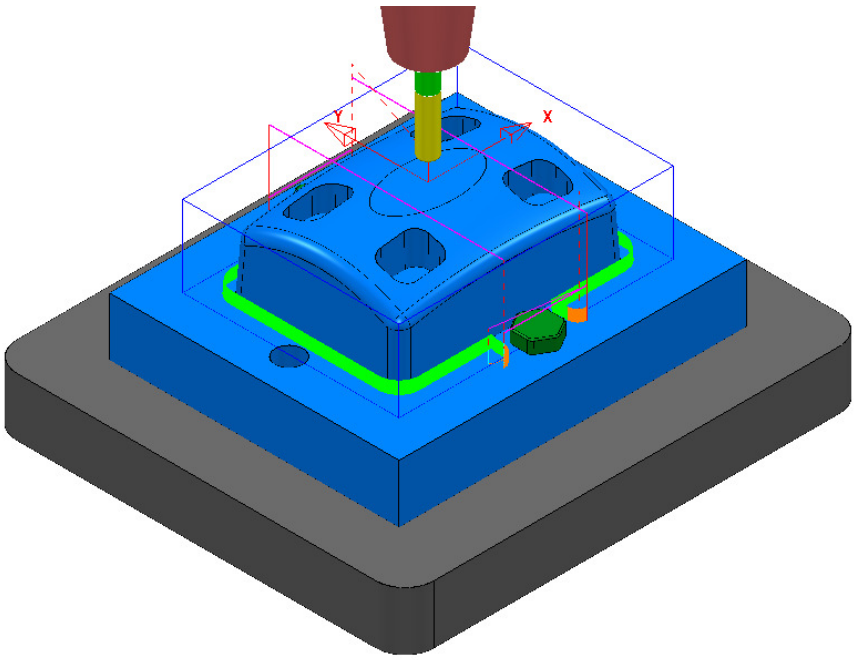

5 Select **Settings** and **Make a Copy** for the toolpath ***D8TR1-Fin1***.

6 Rename the copy as **D8TR1-Fin2**.

 Copyright © Delcam Ltd

7 Use the **Component Thickness** options to **Ignore** the **surfaces** on **Level *ClampingBolts-Y*** (green), and **Machine** with a **4mm thickness** around the **surfaces** on **Level *ClampingBolts-X*** (purple).

8 Modify the **X** dimensions of the **Block** to keep the **Constant Z Finishing *D8TR1-Fin2*** inside the area already machined with ***D8TR1-Fin1***.

9 **Calculate** the **toolpath *D8TR1-Fin2***.

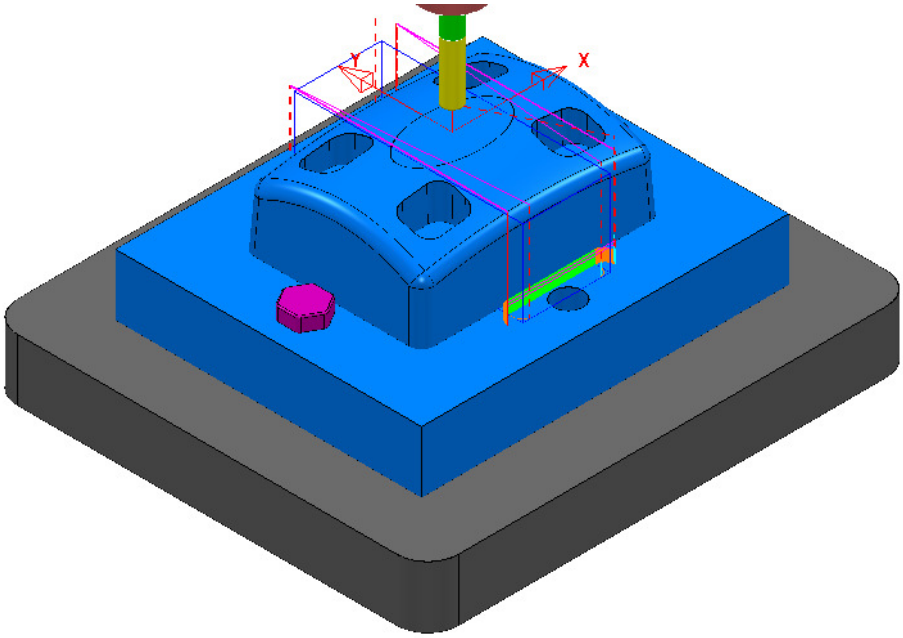

10 In the **PowerMILL explorer** re-order the **Toolpaths** to keep them grouped for the same pair of ***clamping bolts***.

11 **Save** the **Project** to update**:-**

.....\COURSEWORK\PowerMILL-Projects\CompThickness-2

Copyright © Delcam Ltd

17. Stock Models

Introduction

A **Stock Model** provides both a visual and physical record of the remaining material after such entities as the material block and selected toolpaths have been considered.

Stock Model Rest Roughing

1 Select **File** > **Delete All** and **Tools** > **Reset Forms**.

2 Select **File** > **Open Project**:

.....\PowerMILL_Data\Projects\StockModel_1

3 Select **OK** in the **PowerMILL Warning** dialog.

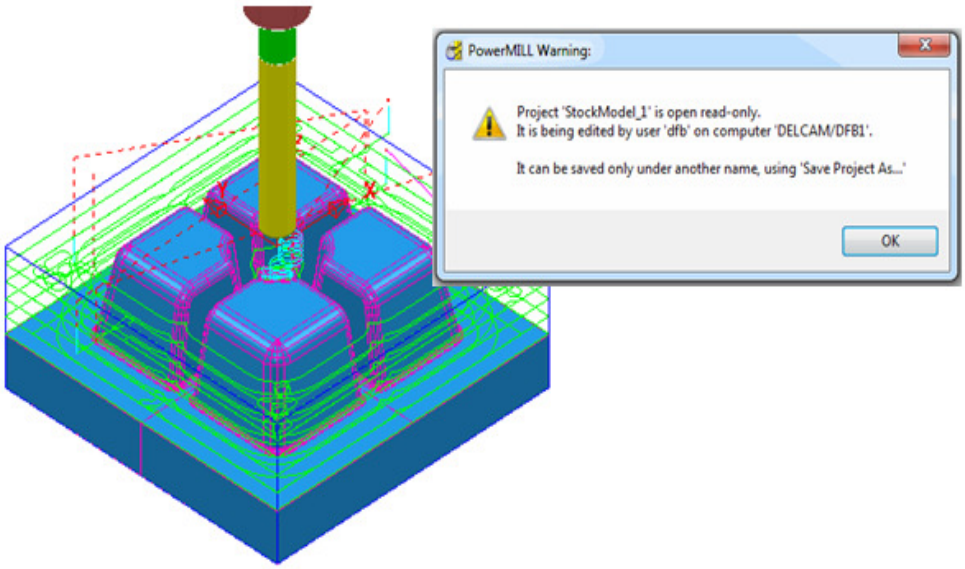

4 Select **File** - **Save Project As**:

.....\ COURSEWORK\PowerMILL-Projects\StockModelExample

5 In the **PowerMILL *explorer*** select **Stock Models** > **Create Stock Model**.

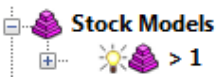

An empty **Stock Model** entity appears in the **PowerMILL *explorer*** and an associated ***Stock Model*** settings dialog appears in the graphics area.

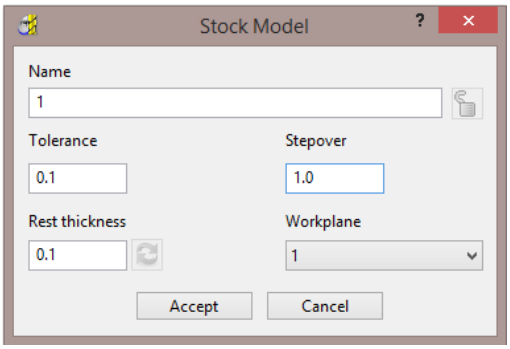

The default settings for triangulation of the **Stock Model** are displayed. In this case we will modify the settings to create a more accurate ***Triangle Mesh*** for the **Stock Model**. Once the **Stock Model** is physically created then these inherent settings cannot be retrospectively altered.

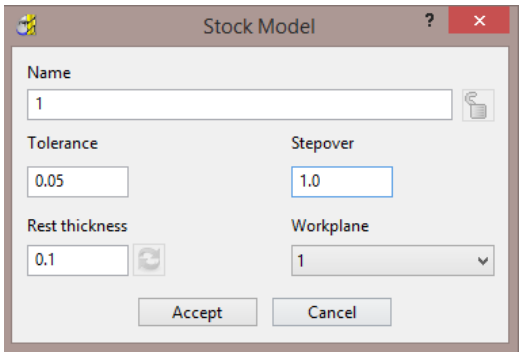

6 Modify the values in the ***Stock Model*** settings to be exactly as shown above and then **Accept** the dialog.

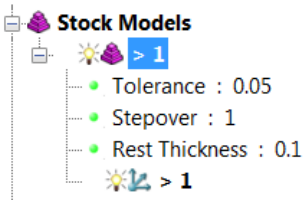

The displayed settings in the **Stock Model** will change accordingly.

7 Right mouse click on the toolpath **D20t3-RGH-a1** and from the local menu select **Add to** > **Stock Model**.

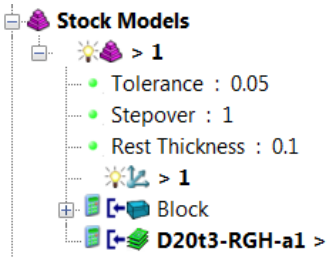

The **toolpath** and associated **Block** are included in the **Stock Model** tree but at this stage are <u>not</u> calculated.

8 In the **PowerMILL** ***explorer***, **Stock Models** area, right mouse click on and from the local menu select **Calculate**.

 Copyright © Delcam Ltd

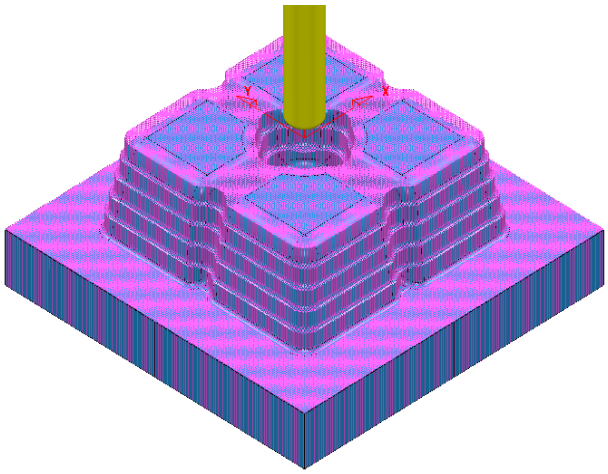

The **Stock Model** will display the visual effect of toolpath **D12t3-RGH-a1** as a purple wireframe mesh.

9 Right-click on **Stock Model** - **1** and from the local menu, select **Drawing Options**, and then tick both, **Shaded** and **Show Rest Material**.

10 From the **Viewing** toolbar, undraw the model (both **Shaded** and **Wireframe**).

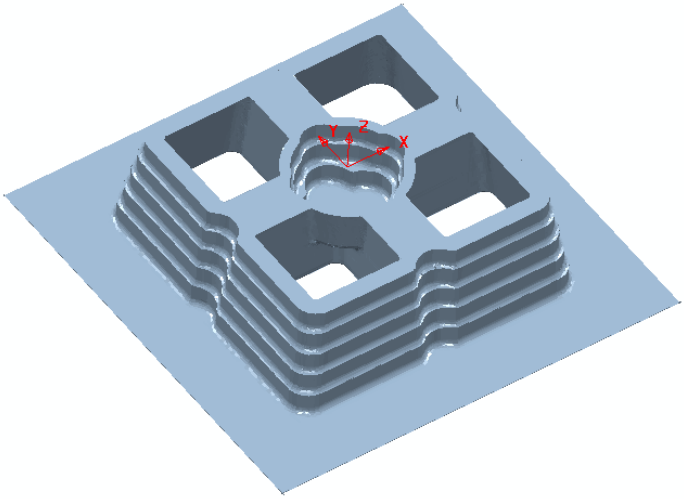

The **Stock Model** is now displayed as shown with the component model and applied toolpath both taken into account.

This represents the remaining material outside the component form after the taking into account the toolpath **D20t3-RGH-a1**.

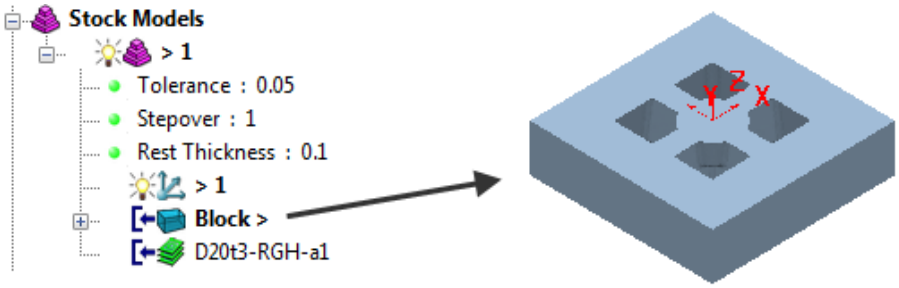

*If **Block** is made active in the **Stock Model** tree then this is the stage of the machining process that will be displayed.*

11 From the **Strategy Selector** , **Finishing** options select the **Offset Flat Finishing** strategy and enter data in the 3 pages exactly as shown below.

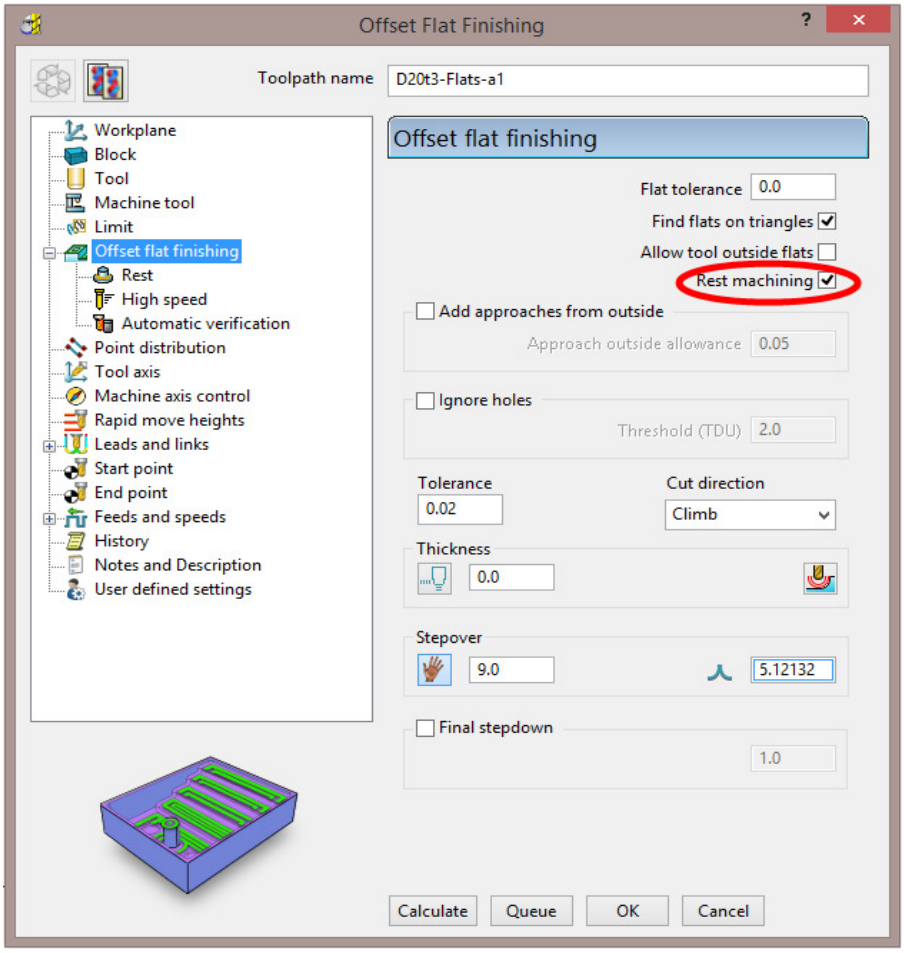

a Note: **Add approaches from outside** is ***un-ticked*** to enable fully independent **Leads** to be applied.

b **Allow tool outside flats** is ***un-ticked*** to limit the toolpath exactly to the **X Y** dimensions of the **Block**.

c The **Rest Machining** box (***Rest machining*** to **Stock Model**) is ***ticked*** to prevent the already finished, upper flat areas from being included in the toolpath.

d By ticking this option the **Rest** page will become available for selection in the local browser.

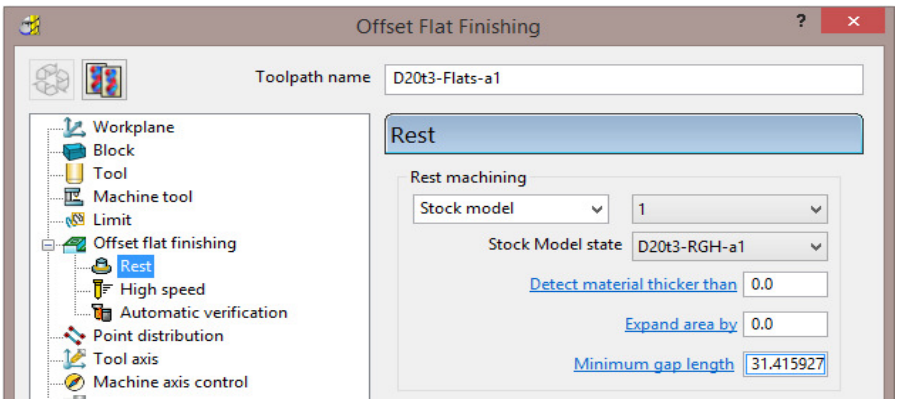

12 In the above dialogue select the **Stock Model** as **1**.

Copyright © Delcam Ltd

13 In the **main** toolbar, **Leads and Links** options set the **Lead in** options exactly as shown below.

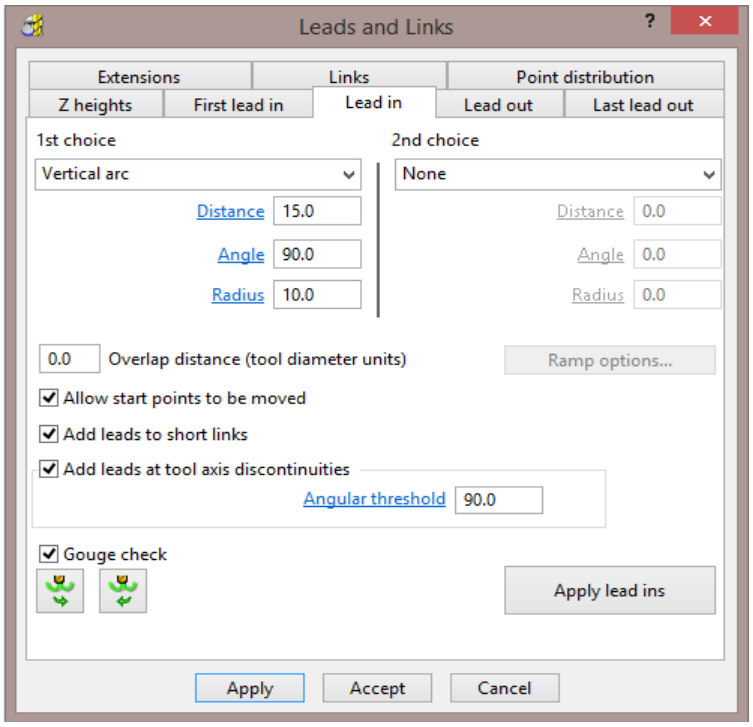

14 Then copy the **Lead in** options to the **Lead out** .

15 **Accept** the **Leads and Links** dialog.

16 **Calculate** the **Offset Flat** finishing strategy and then **Close** the dialog.

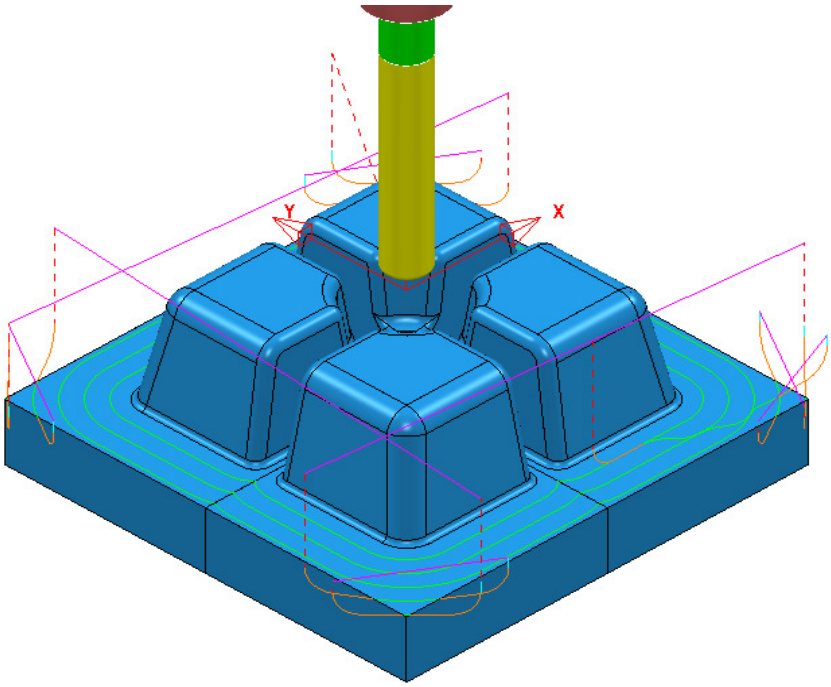

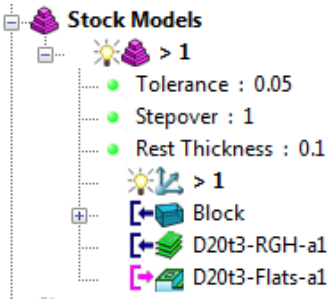

*The latest **Toolpath - D20t2-Flats-a1** is automatically added as a reference item in the **Stock Model** list but not as a physical entity.*

17 In the **PowerMILL *explorer***, right-click over the **Toolpath** - ***D20t3-FLATS-a1*** and in the local menu select **Add to** > **Stock Model**.

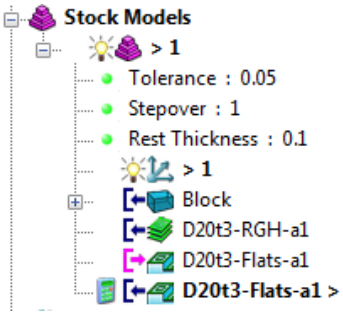

18 In the **PowerMILL *explorer***, right-click on the **Stock Model** named **1** and in the local menu select **Calculate**.

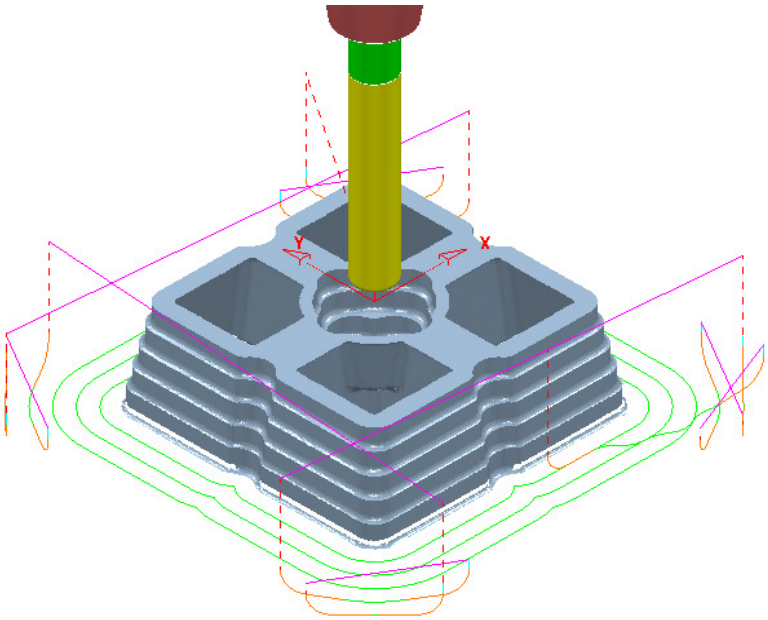

After the calculation, the **Stock Model** will be displayed again only this time with the **Offset Flats Finishing** included.

19 **Activate** the **toolpath *D20t3-RGH-a1*** and in the local menu select **Settings...** to open the **Model Area Clearance** dialog.

 Copyright © Delcam Ltd

20 Select **Create a new toolpath based on this one** and input new data into the dialog exactly as shown on the following page.

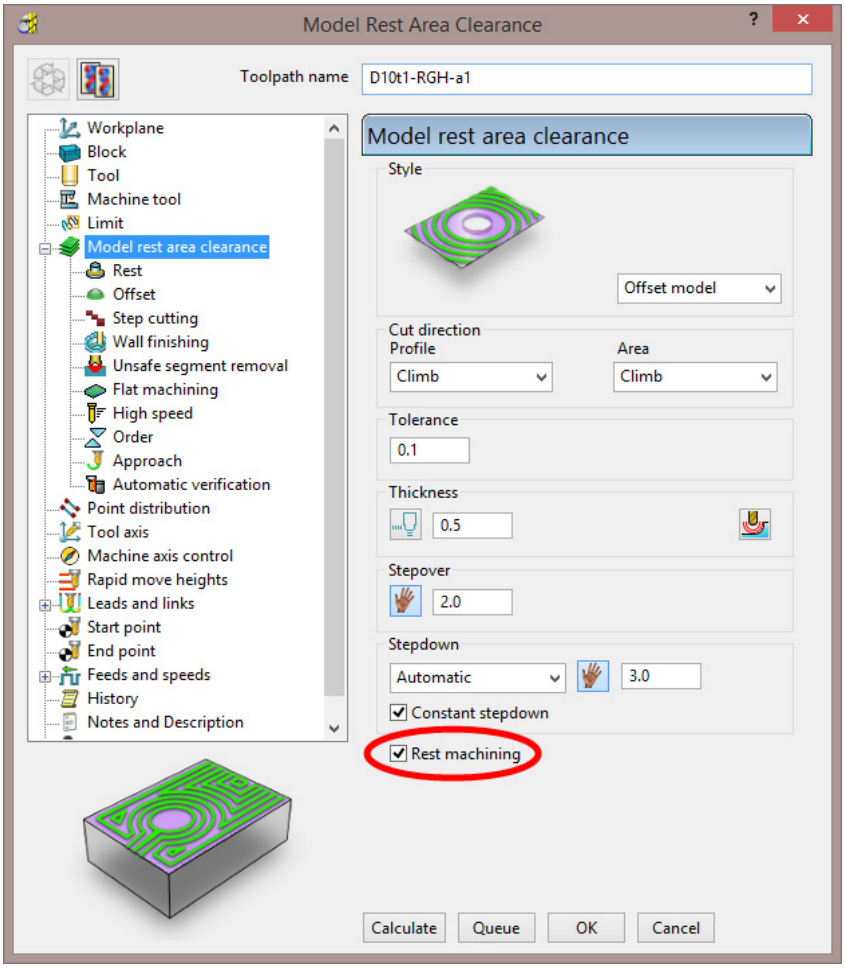

a Input the **Toolpath** name as ***D10t1-RGH-a1***

21 *Activate* the **D10t1** tool.

22 Set the ***Style*** as **Offset model**.

23 Tick the **Rest machining** box.

24 Select the **Rest** page and in ***Rest Machining*** use **Stock Model** – **1**.

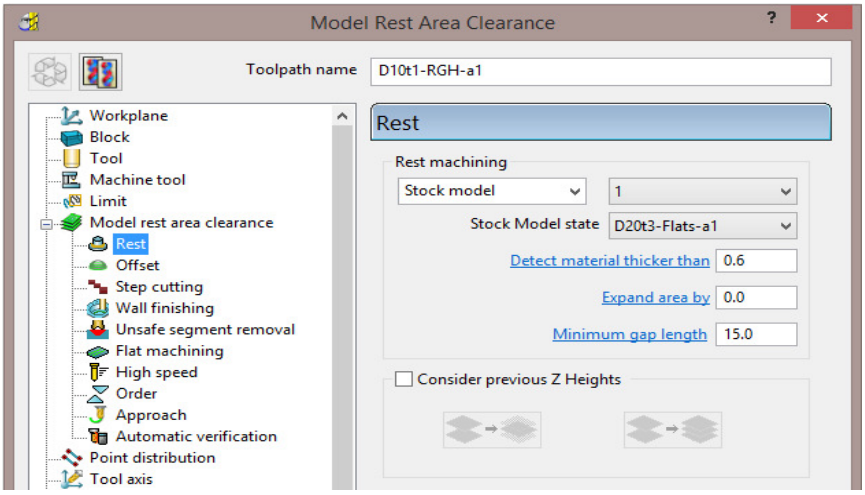

25 Select **Calculate** on the **Model Area Clearance** dialog to machine within the limits of the specified **Stock Model**.

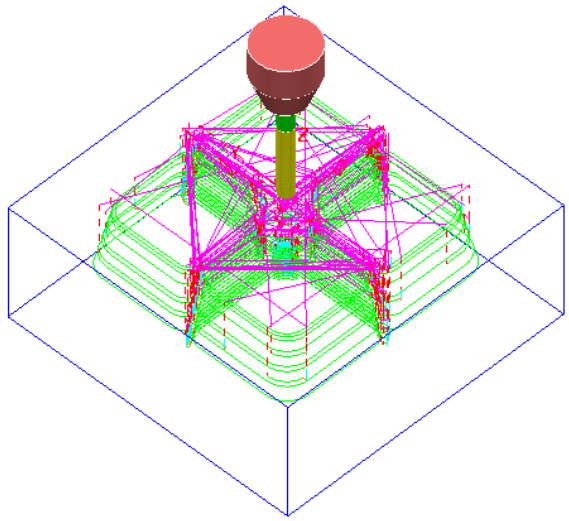

26 Close the **Model Area Clearance** dialog.

27 The latest **Toolpath – D10t1-RGH-a1** is automatically added as a reference item in the **Stock Model** list but not as a physical entity.

28 In the **PowerMILL *explorer*** use the left mouse button to drag the **Toolpath *D10t1-RGH-a1*** to the bottom of the list.

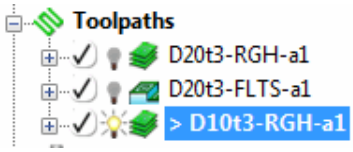

29 In the **PowerMILL *explorer***, right-click over the **Toolpath** – ***D10t1-RGH-a1*** and in the local menu select **Add to** > **Stock Model**.

30 In the **PowerMILL *explorer***, right-click on the **Stock Model** named **1** and in the local menu select **Calculate**.

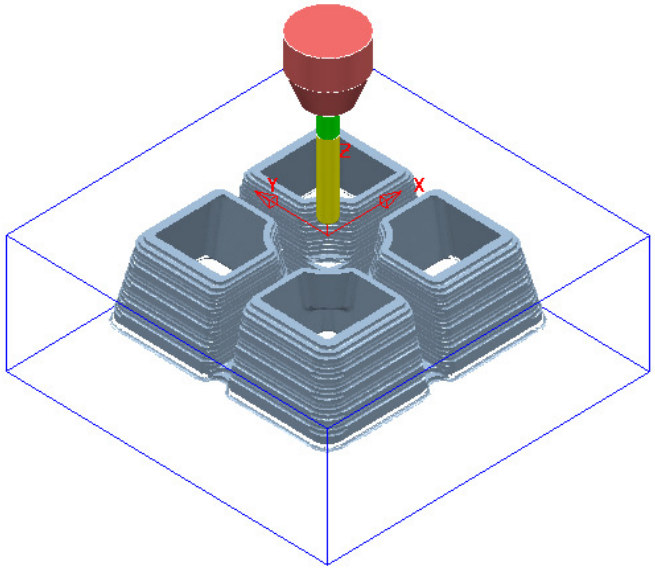

The **Stock Model** is now displayed as shown with the latest toolpath removed.

 Copyright © Delcam Ltd

Now that the bulk of the material is removed, the main component form is now ready to be ***Finish*** machined.

31 Un-draw the **Stock Model**.

32 **Select** and **Blank** all except the following surfaces:

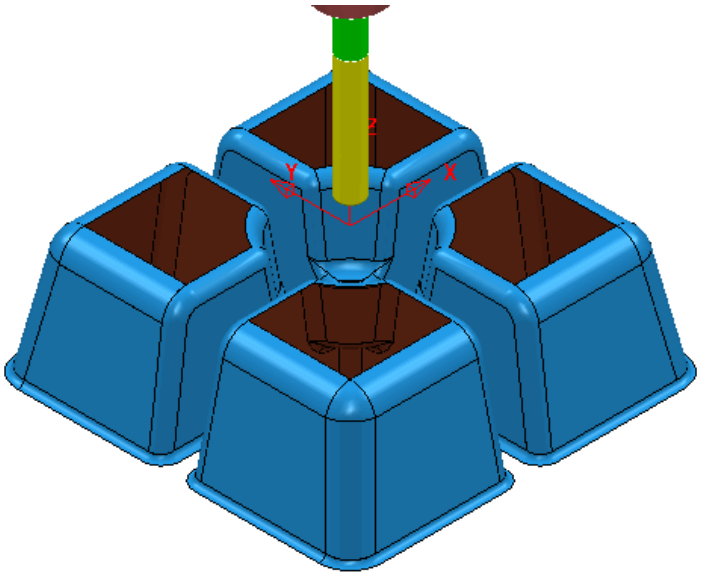

33 Using the left mouse button, drag a box across the model above to select all displayed **surfaces**.

34 **Activate** the tool **BN8**.

35 In the **PowerMILL *explorer***, right-click on **Boundaries** and in the local menu, select the **Selected Surface** option.

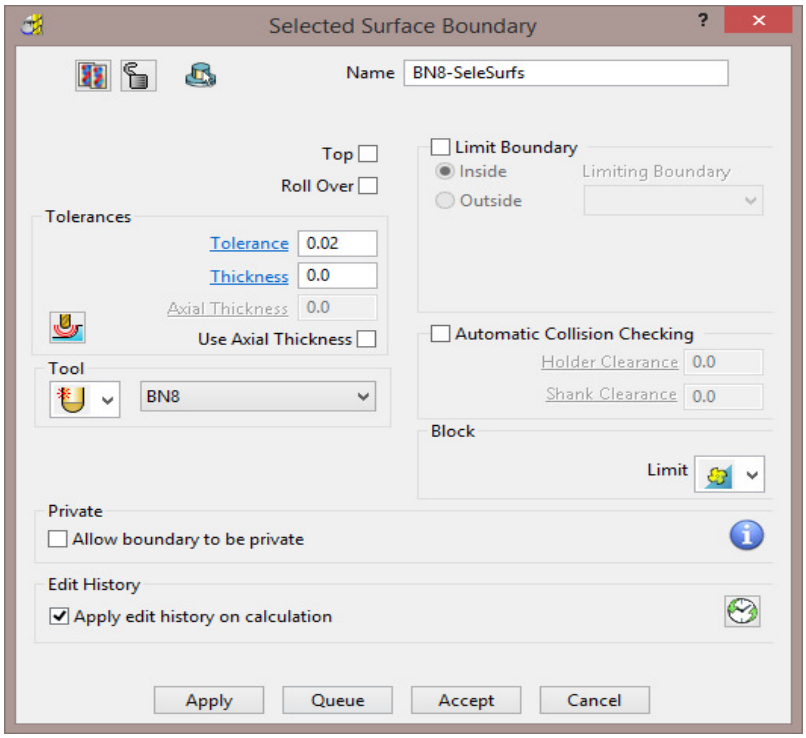

36 Enter data exactly as shown above and then **Apply** to create the **Boundary**.

37 Check that both **Boundary 1** and the **BN8** tool are both **Active**.

38 Select the **Toolpath Strategies** and open the **Finishing** page.

39 Select the **Steep and Shallow Finishing** option and enter data into the dialog exactly as shown below:

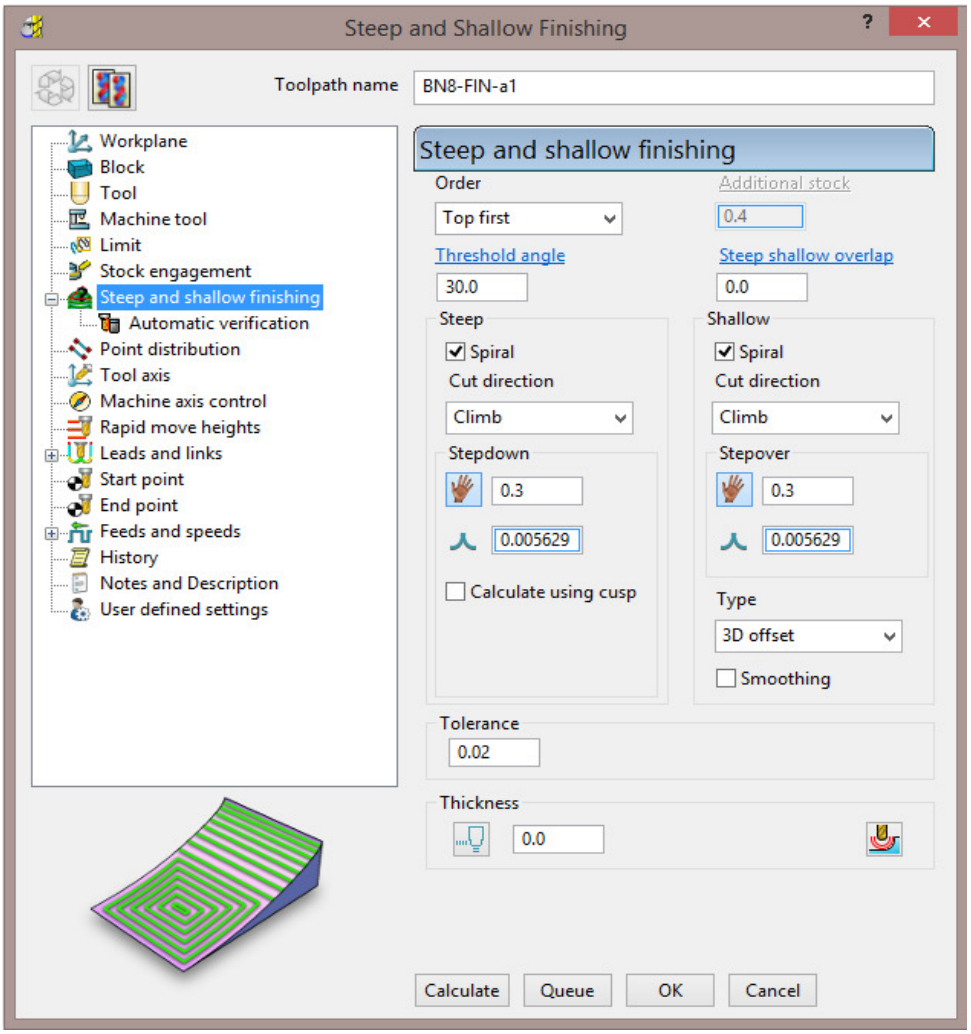

40 Select the **Limit** page and enter data exactly as shown in the following image:

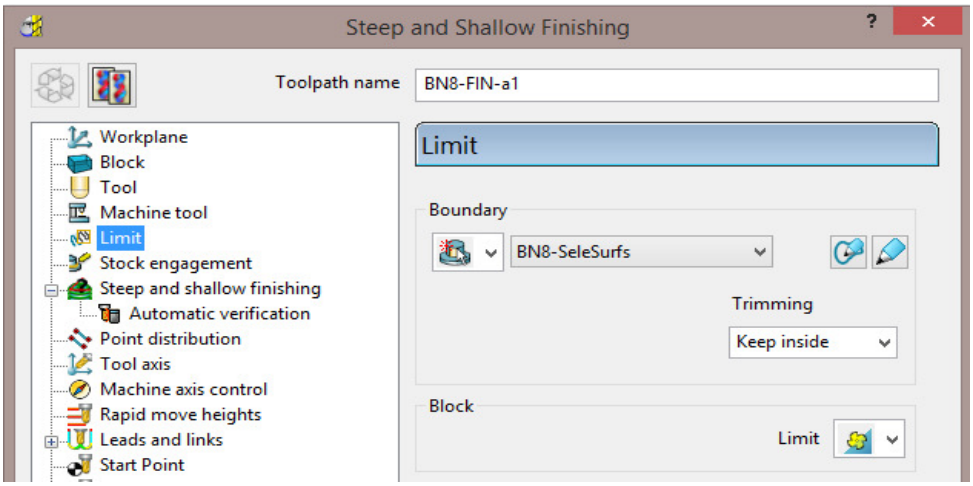

41 Select **Calculate** to create the **Toolpath** and then **Close** the dialog.

 Copyright © Delcam Ltd

*The **Toolpath BN8-FIN-a1** has been limited to be inside the **Boundary**.*

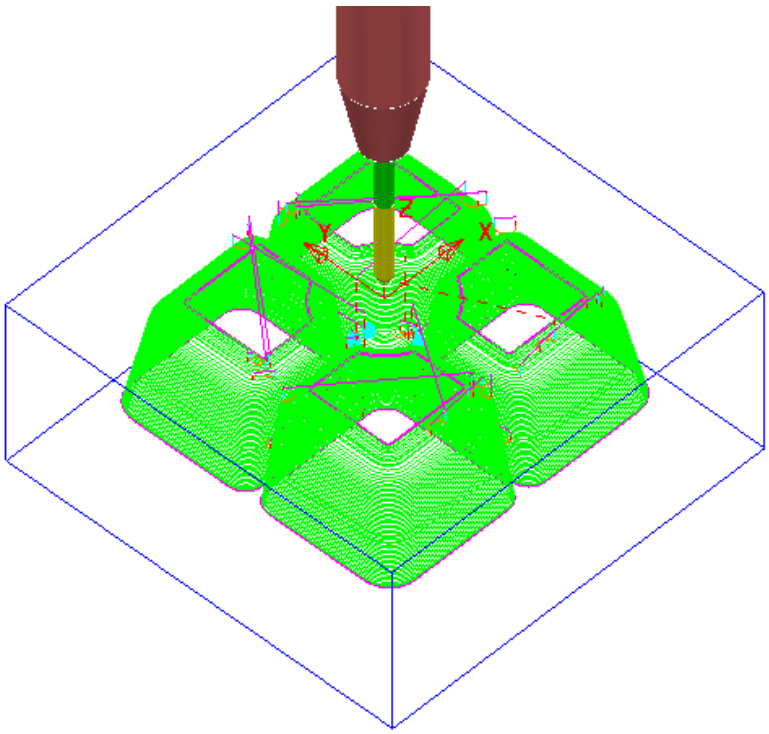

42 In the **PowerMILL *explorer***, right-click the **toolpath *BN8-FIN-a1*** and in the local menu select **Add to** > **Stock Model**.

43 In the **PowerMILL *explorer*** right-click on **Stock Model** – **1** and select **Calculate** to update.

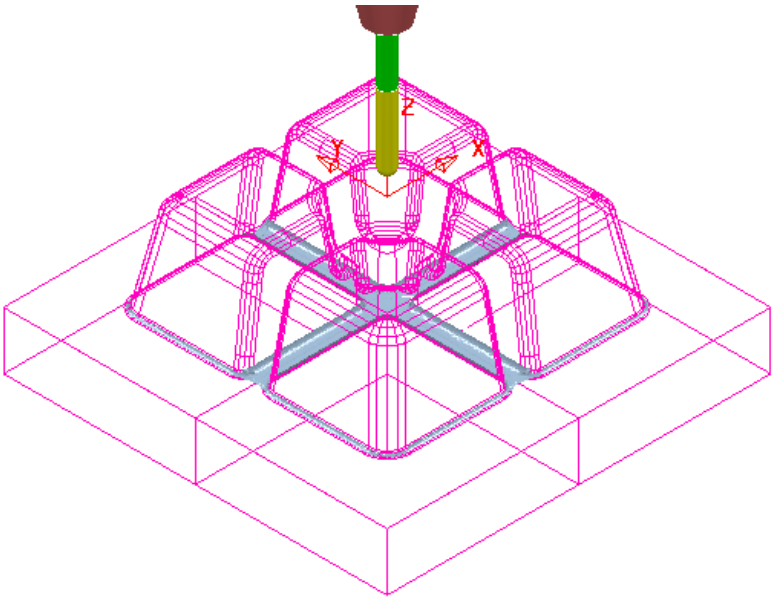

The remaining **Stock Model** is displayed as shown above.

Stock Model Rest Boundary

The **Finishing** strategies do not have a direct ***Rest Machining*** option that relates to the **Stock Model**.

It is however possible to create a ***Stock Model Rest*** **Boundary** to define the areas with material left on. This can then be used to limit a finishing strategy such that only the remaining stock is removed.

1 In the **PowerMILL** ***explorer***, right-click on **Boundaries** and in the local menu select **Stock Model Rest**.

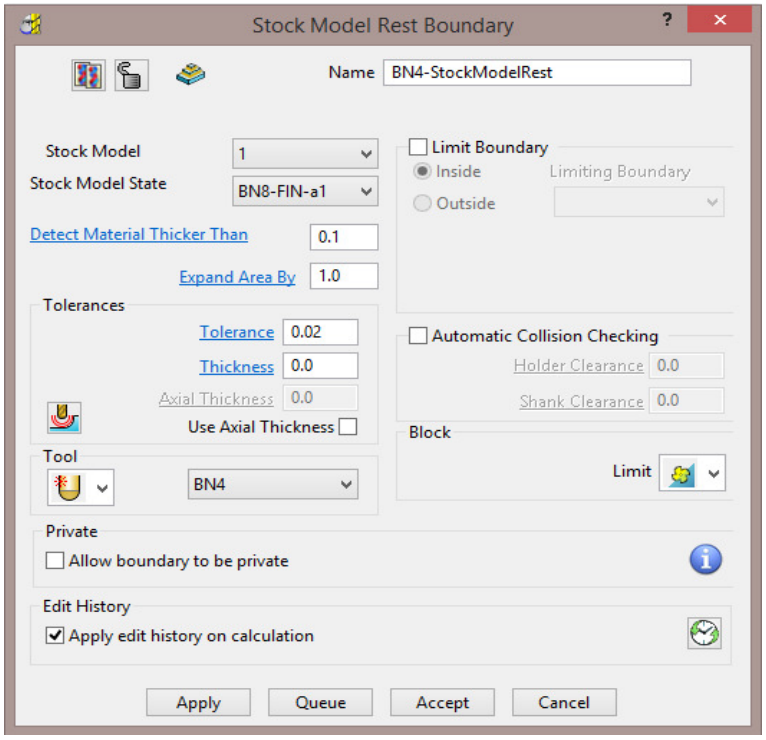

2 Enter data exactly as shown in the above image and **Apply** and then **Cancel**.

Boundary *segments will only be created where the* ***BN4*** *tool is able to access the model form.*

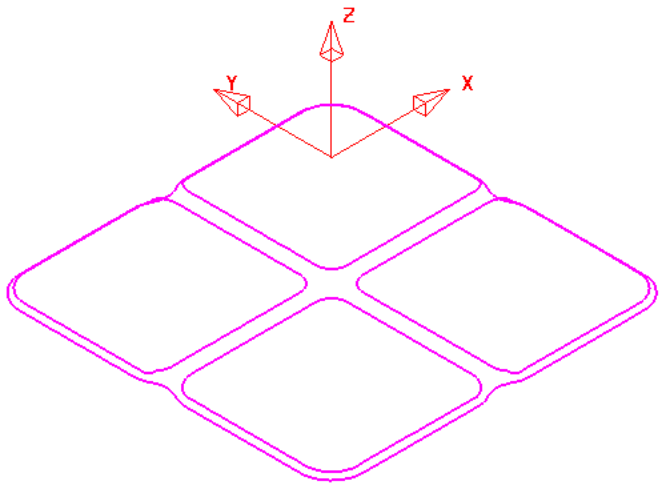

The ***Stock Model Rest*** **Boundary** identifies the area of the remaining **Stock Model**.

 Copyright © Delcam Ltd

3 Select the **Toolpath Strategies** and select the **Finishing** tab in the dialog.

4 Check that the new **Boundary *BN4-StockModelRest*** and the **BN4** tool are both **Active**.

5 Select the **3D Offset Finishing** strategy and enter data exactly as shown below:

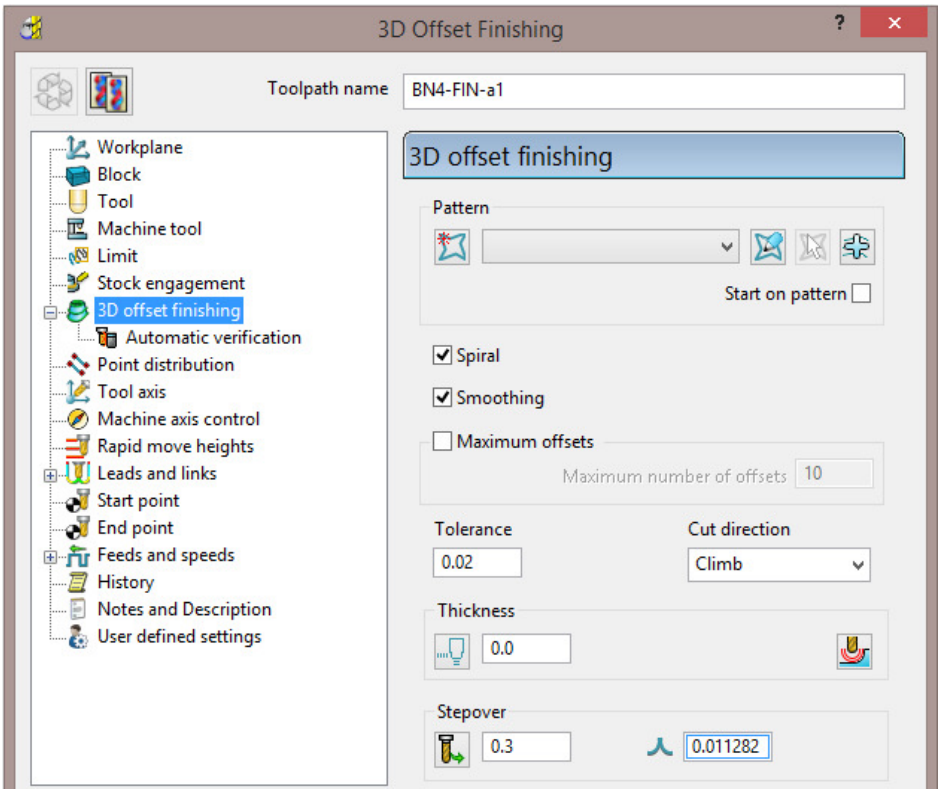

6 Select the **Limit** page and enter data exactly as shown in the following image:

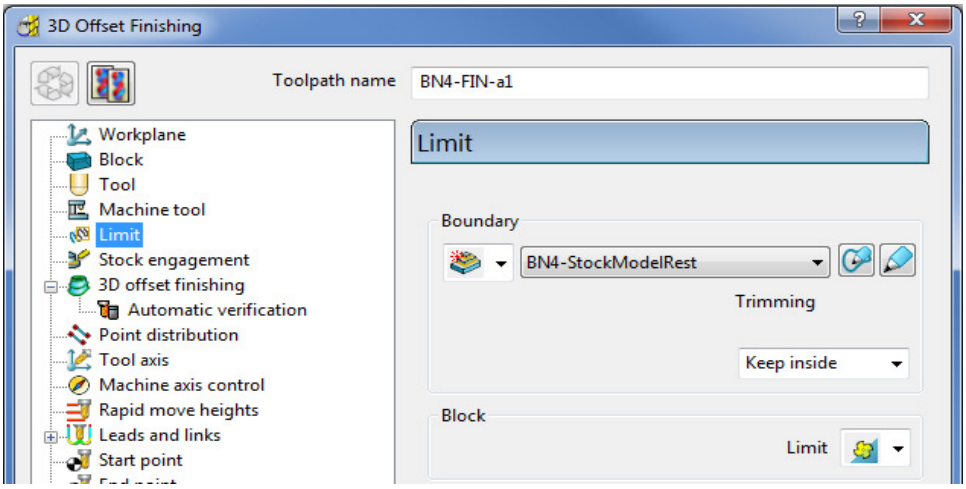

7 Select **Calculate** to create the toolpath and then **Close** the dialog.

8 In the **Leads and Links** options **Apply** (1st Choice) ***Lead in/out*** as **Surface Normal Arc** with ***Angle* 90** and ***Radius* 3**.

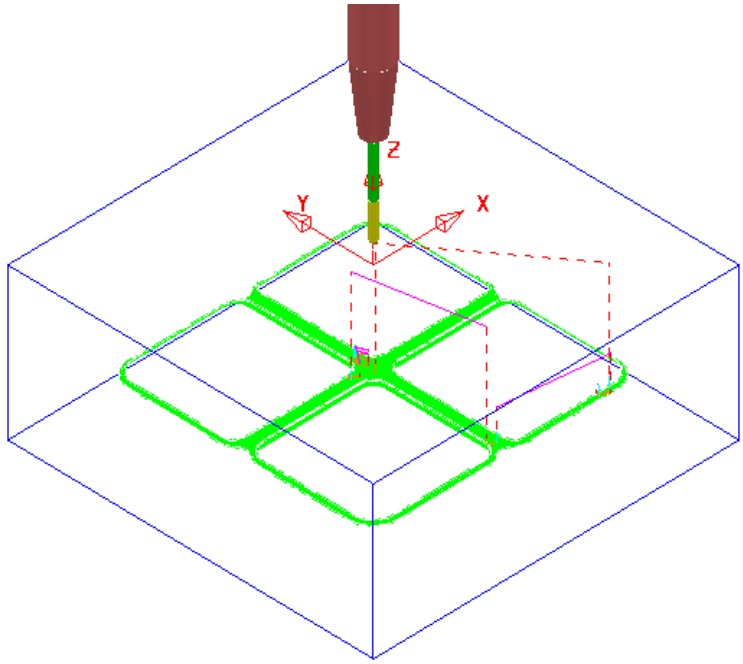

9 In the **PowerMILL *explorer***, right-click the **toolpath *BN4-FIN-a1*** and in the local menu select **Add to** > **Stock Model**.

10 In the **PowerMILL *explorer***, right-click on the **Stock Model** and select **Calculate** to update.

*The **Stock Model** displayed with **Show Rest Material** set will have visually disappeared apart from perhaps, a few tiny, insignificant patches.*

*If a previous toolpath in the **Stock Model** tree is selected then the status of the material at that point will be displayed.*

11 In the **PowerMILL *explorer*, Stock Model - 1** tree, **Activate** the toolpath named **D20t3-RGH-a1**.

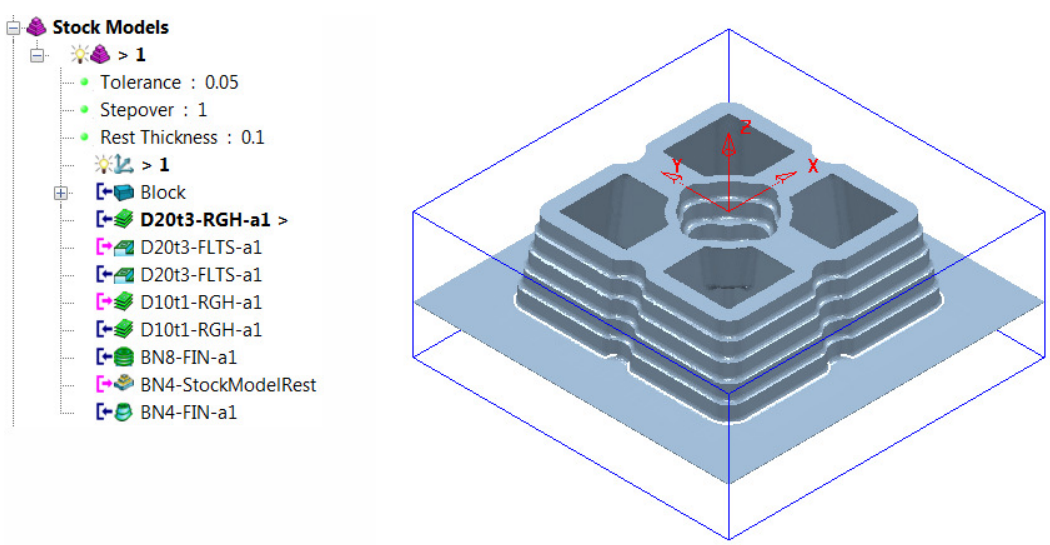

 Copyright © Delcam Ltd

12 In the **PowerMILL *explorer*, Stock Model - 1** tree, **Activate** the toolpath named **BN4-FIN-a1**.

*The **Stock Model** will visually disappear while the **Show Rest Material** option is active.*

13 Right-click on the **Stock Model** and in the local menu, switch on (tick) the option **Show All Material**.

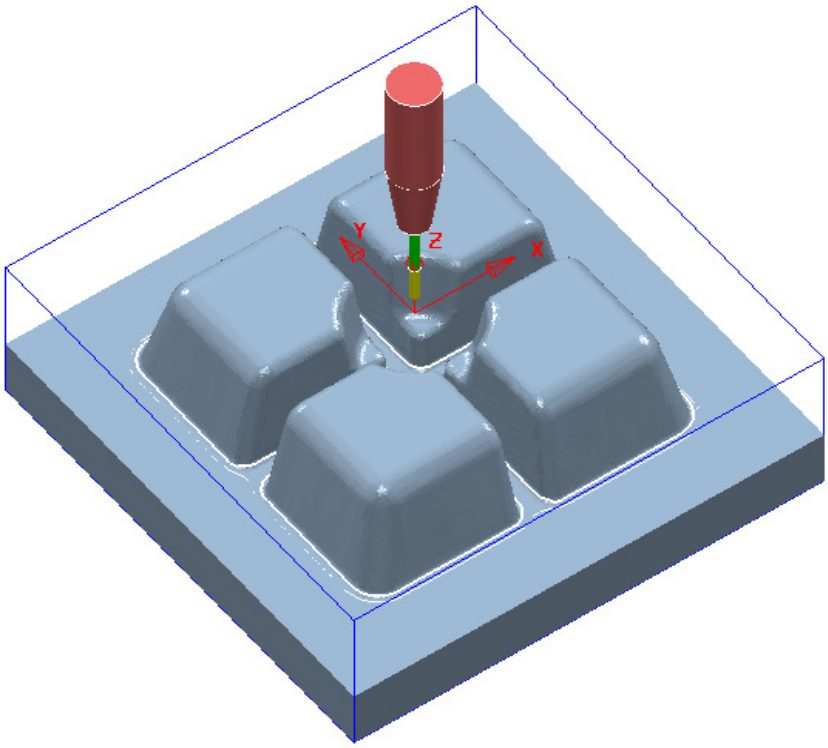

The **Stock Model** is now exactly the same shape and size as the **model**.

14 Select **File** > **Save Project** to update the stored **Project**.

Stock Model starting from a complex block.

If a casting is to be machined then it is not possible to directly add the complex shape to a **Stock Model**. It is however possible to import a **Triangle** model of the original casting as the initial **Block** and then use it as the first entity in a **Stock Model**. The **Stock Model** can then be used as the referenced entity in an intial **Rest Roughing** strategy.

On import the **Block** must use the option, ***Coordinate System*** as **Global Transform** (Exported **Triangle** models do not support **Workplanes**).

1 Select **File** > **Delete All** and **Tools** > **Reset Forms**.

2 Select **File** > **Open Project**:

.....\PowerMILL_Data\Projects\StockModelCasting_Start

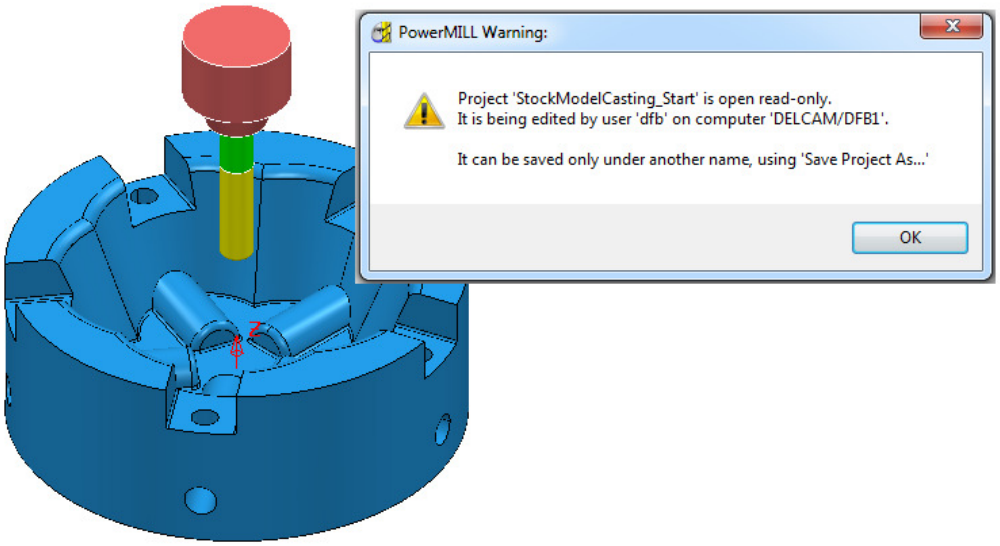

3 Select **OK** in the **PowerMILL Warning** dialog.

4 Select **File** - **Save Project As**:

.....\ COURSEWORK\PowerMILL-Projects\StockModelCasting

5 Open the **Block** form and set ***Coordinate System*** to **Global Transform**.

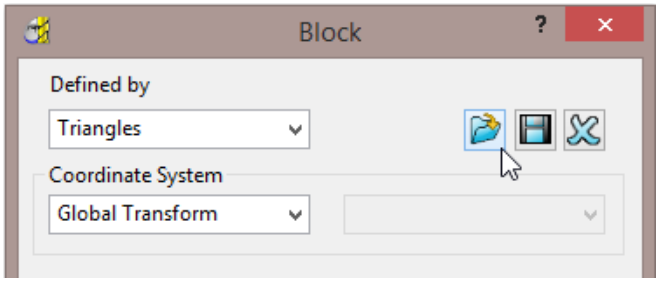

6 Select **Defined by** – **Triangles**, select and browse to the triangle model:-

C:\Training_Data\PowerMILL_Data\Triangles\StockModel-Casting.dmt

 Copyright © Delcam Ltd

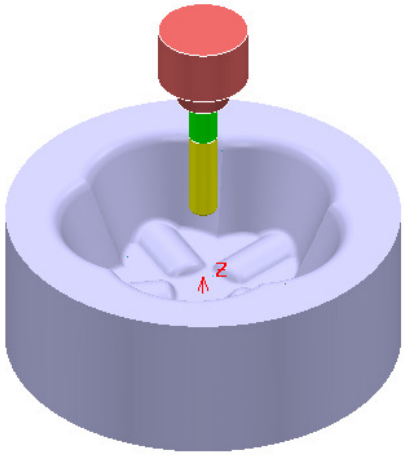

7 Open the **Rapid Move Heights** form and select **Calculate**.

8 **Activate** the tool **D25TR3**.

9 Create a new **Stock Model**.

10 Right mouse click on the new **Stock Model** and from the local menu select Settings.

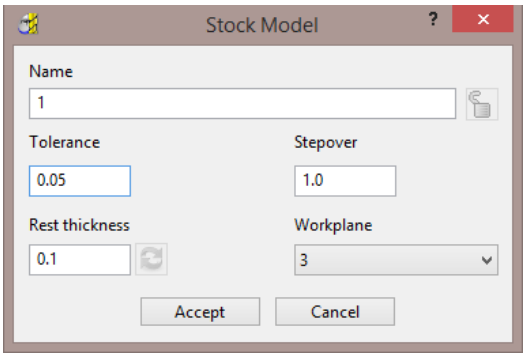

11 Edit the dialogue with above values and **Accept**.

12 Right mouse click on the new **Stock Model** and from the local menu select **Apply Block**.

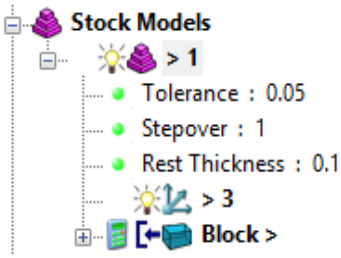

The complex **Block** is added as the first entity in the **Stock Model**.

13 Right mouse click on the new **Stock Model** and from the local menu select **Calculate**.

14 Undraw the **Block**.

15 Right mouse click on the new **Stock Model** and from the local menu select **Drawing Options** and tick both **Shaded** and **Show Rest Material**.

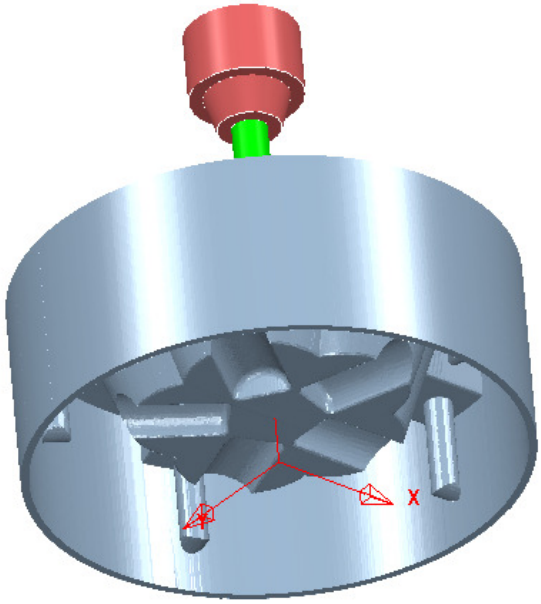

The **model** form is visually removed from the **Stock Model**.

Exercise:

16 **Calculate** a **Block** of ***Type* - Cylinder** *and* ***Defined by* - Model**.

17 Create a **Model Rest Area Clearance** – **Offset Model** strategy with the **D25TR3** tool, using the **Stock Model** as the reference item.

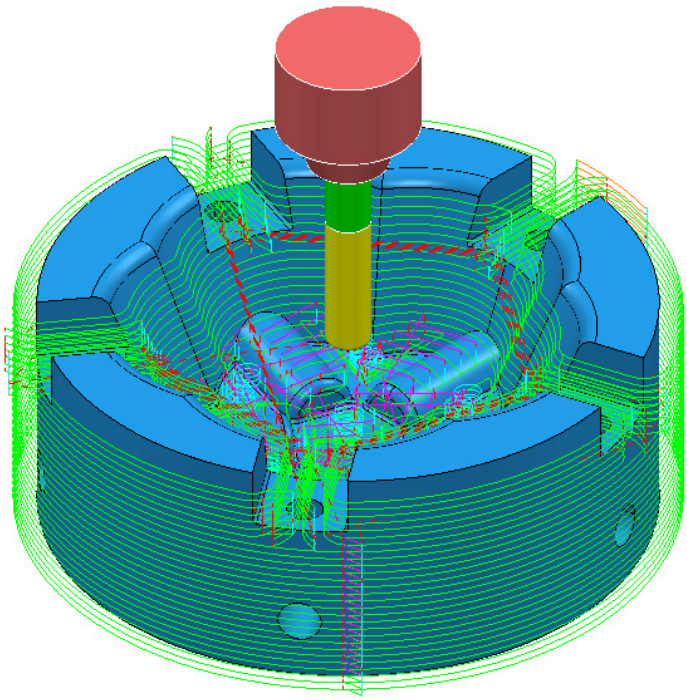

The **Area Clearance** - **Rest** strategy is created within the defined volume of the **Stock Model**.

 Copyright © Delcam Ltd

18. Macros & User Menu

Introduction

There are various ways in which the user can customise **PowerMILL**. This chapter looks at the creation of:

- **Macros**
- **User Menus**

Home Area

The usual method to enable the **User Menu** to be recognised by **PowerMILL** is to set up and use a **home** area in ***Windows***. This can be located to any convenient area on the hard disk. In the following example the **home** area is:-

C:

To check if a **Home** area already exists on a computer;

1 Open **File Explorer** 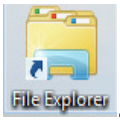

.

In the local explorer, right-click on **This PC** and select **Properties** to open the **System** dialog.

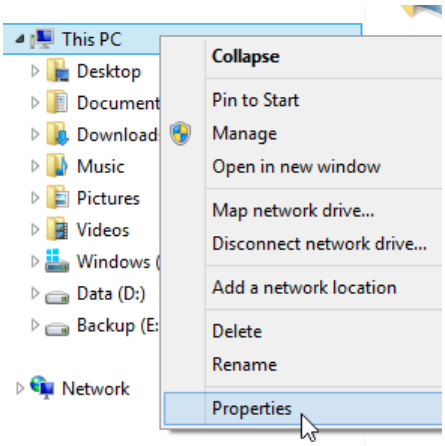

*Alternatively, at the lower left corner of the screen, right mouse click on **Start** and from the local menu select **System**.*

2 In the **System** dialog select the **Advanced system settings** option and then in the **System Properties** dialog, select **Environment Variables**.

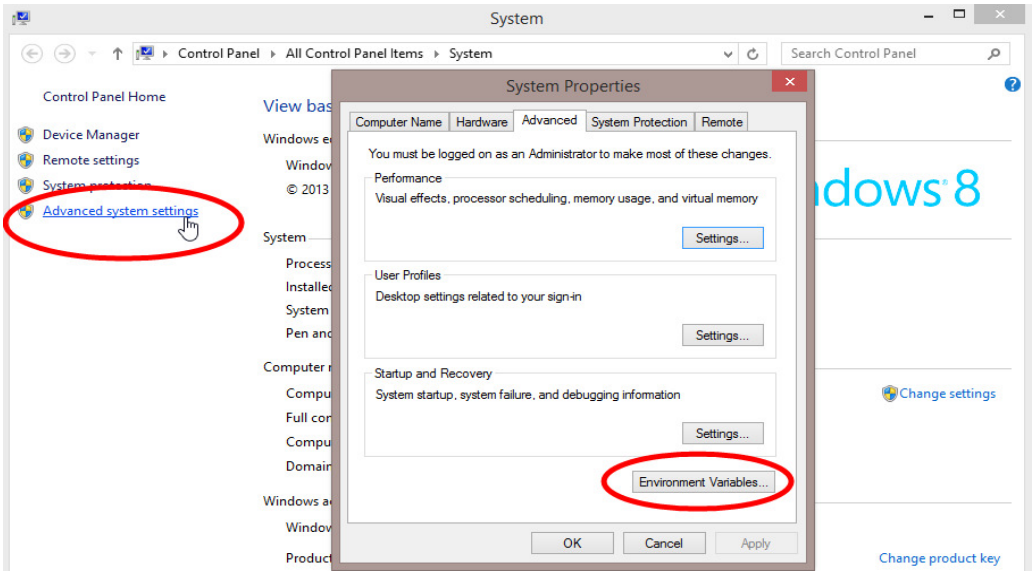

3 If the **home** area is not already defined as shown below, select **New...**

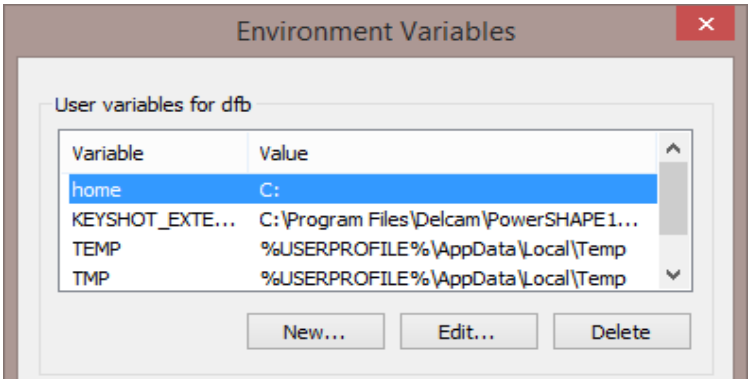

4 In the ***User Variables*** dialog, enter **home** in the ***Variable*** name field and **C:** in the ***Value*** field.

5 Click **OK**.

*You must have Admin rights to create a **New User Variable**.*

6 If it does not already exist, create a folder named **pmill2** in the required **home** area (**C:\pmill2**).

*If the **pmuser.mac**, **user_menu** and any other **macro**s are being stored in this folder, then **PowerMILL** will have immediate access through the default **Macro** search paths.*

 Copyright © Delcam Ltd

Macros

A **Macro** is a text file, which contains a sequence of commands to drive **PowerMILL** operations. These can be created by recording each command or by typing in the commands directly. **Macros** (which have a **.mac** extension) can then be run from the **PowerMILL** ***explorer*** or from a ***user defined menu***.

When **PowerMILL** starts up, it will attempt to identify and run the **initialisation macro** (if it exists!) called **pmuser.mac**. By adding customised **PowerMILL** commands to the initialisation macro, the user can set up their own default settings and parameters.

For immediate use a **pmuser.mac** can be placed in the **pmill2** folder, directly below the users **Home** area. The **pmill2** directory is also a convenient location for storing other user-defined **macros** ideally arranged in suitable sub-folders. This will be covered later.

Creating a pmuser macro

Macros are created in **PowerMILL** by recording the operations as they occur. Only flags or parameters that are physically changed will be recorded into the macro; therefore to record a value that is already set, it must be re-entered or a flag re-switched. For example, if the finishing tolerance is currently set to 0.1mm, and it is required that the macro stores the same value, then it must be re-entered over the existing copy in the form during recording.

1. Select **File** > **Delete All**.
2. To start recording, right-click on **Macros** in the **PowerMILL** ***explorer*** and select **Record**.

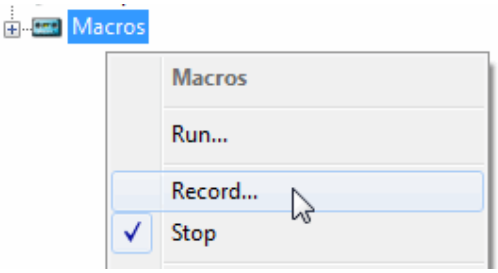

3. Save **pmuser.mac** by first clicking on the existing folder displayed in Save in.

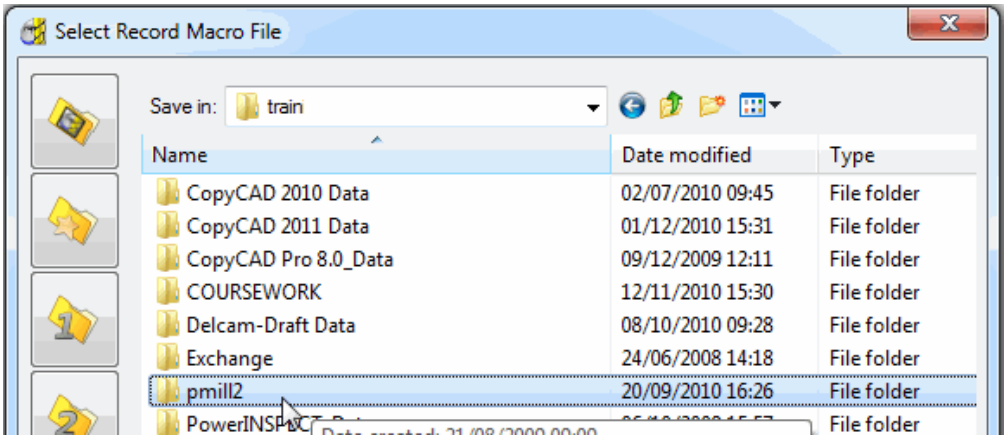

4. Then, in the resultant dialog, browse to **C:\pmill2** and at the bottom of the dialog enter the file name, **pmuser** before clicking **Save**.

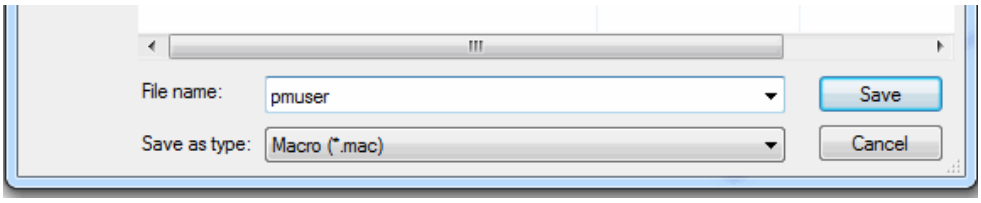

The Macro icon changes to red while recording is in progress

The **pmuser.mac** automatically runs whenever **PowerMILL** starts up, thereby providing the user with custom default settings. It can also be run at any time during a session to reinstate the initialisation settings without having to restart **PowerMILL**.

All required data or options must be set or selected if they are to be included in a macro (Even if it is necessary to overwrite or switch them off first).

5 From the **Main** pull-down menus select **Tools** > **Options**.

6 Select **Tools** > **Feeds and Speeds**, change the **Feed Rate Plunge Factor** to **0.2**, tick the **Auto Load Feed Rate** box, and **Accept** the dialog.

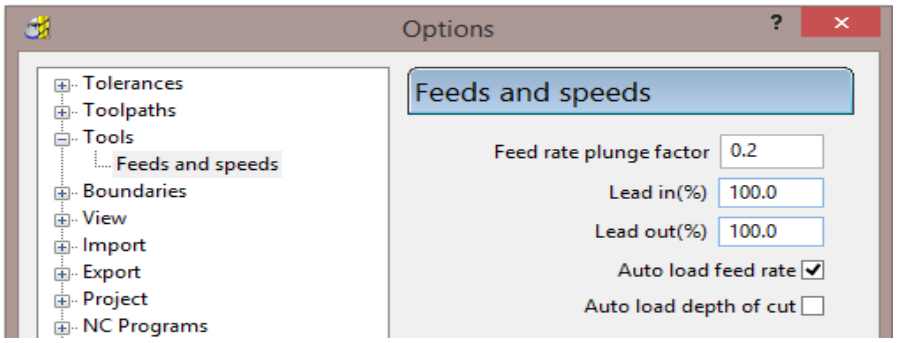

7 Open the **Leads and Links** dialog and input **Short/Long Threshold** as **3**, both ***Short*** and ***Long*** as **Skim**, and ***Default*** as **Incremental**.

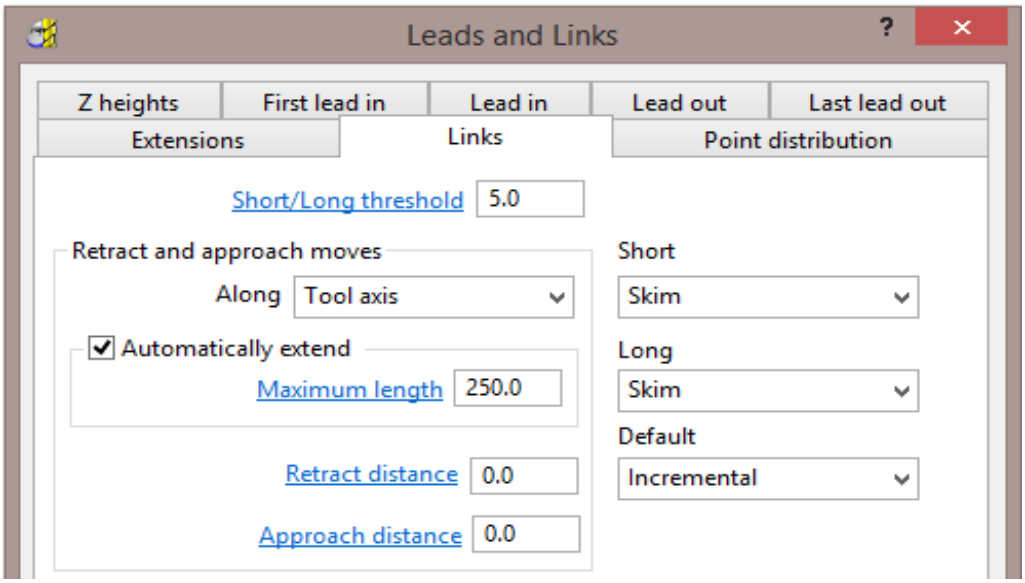

8 **Accept** the **Leads and Links** dialog.

 Copyright © Delcam Ltd

9 In the **PowerMILL *explorer***, right-click on **NC Programs**, and select **Preferences**.

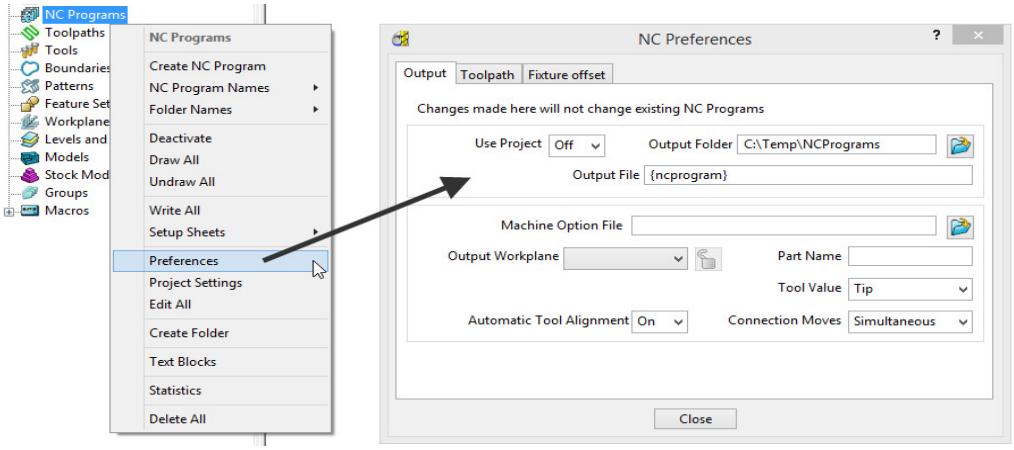

10 On the **NC Preferences** dialog **Output** page, select the **Machine Option File** as **heid400.opt**.

11 Even if already set, select:

Use Project - **On**

Tool Value - **Tip**

Automatic Tool Alignment - **On**

Connection Moves - **Move, Rotate**

12 Select the **Toolpath** page and even if already set, select:-

Tool Change - **On New Tool**

Tool Numbering - **As Specified**

Tool Change Position - **After Connection**

Cutter Compensation: **Length - Off**

Radius - **None**

13 Select **Apply**, followed by **Accept**.

*It is important to remember to **Accept** and not to **Apply** forms that are opened while creating an **Initialisation Macro**, the only exception being the creation of **NC Program Preferences** (An initialisation file is for pre-setting forms but at this stage without executing the commands).*

14 Select **Stop** from the local **Macros** menu to stop the recording process.

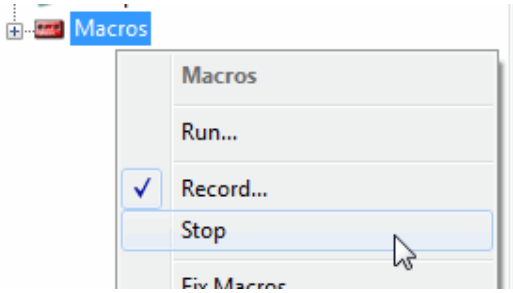

15 Select the plus (+) sign next to **Macros** in the **PowerMILL *explorer*** to open the tree.

16 Right-click **pmuser**, then select **Edit**.

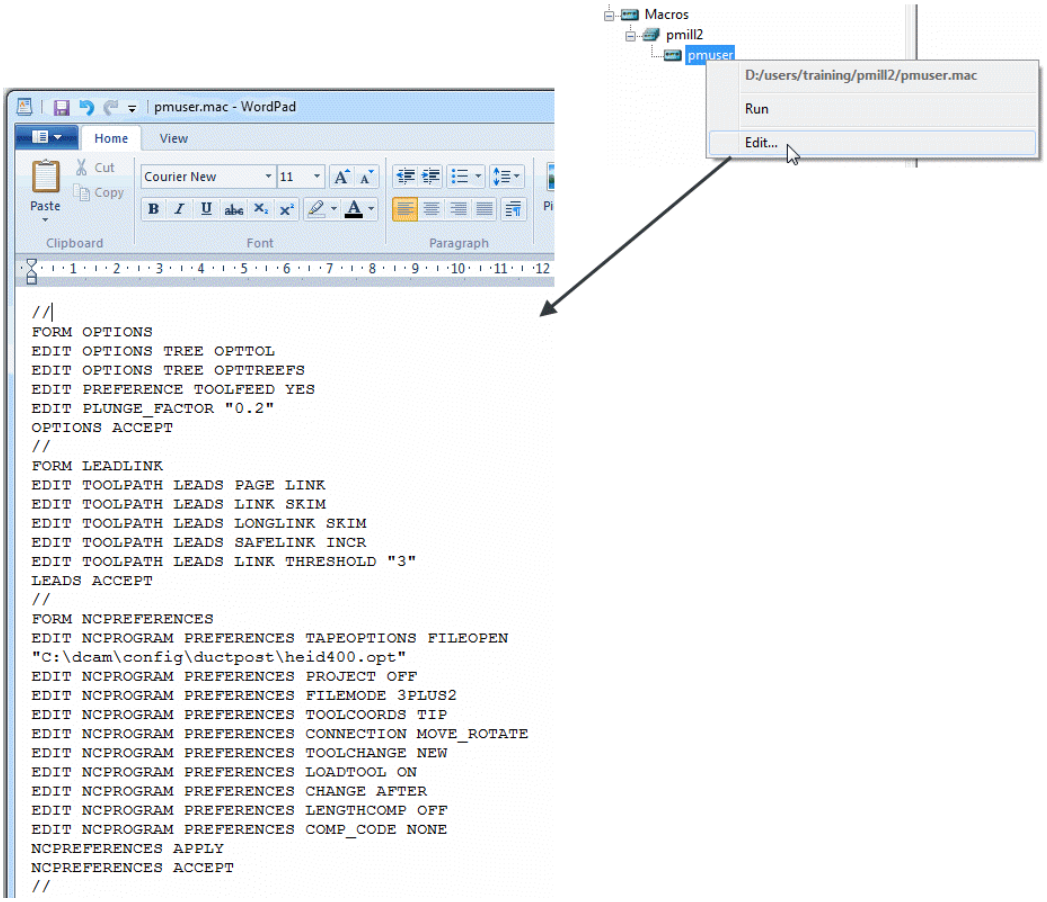

This is a standard **Wordpad** document that can be edited with new values and then saved.

To try this out you will need to exit and re-open **PowerMILL**.

17 Select **File** > **Exit** and restart **PowerMILL** to check that the settings from **pmuser.mac** have been activated.

Other Typical Macro Applications

Apart from tailoring **PowerMILL** by the creation of an initialisation macro other useful applications include macros for un-draw, draw and resetting **Leads and Links**, locating and inserting tooling **Templates**, setting **NC Preferences**, regularly used machining sequences or settings, and input of preview, commands not yet available on the GUI. Note the pmuser macro can be run through the browser at any time during a **PowerMILL** session to restore your settings.

Creating NC Preference macros

1 From the **PowerMILL** ***explorer***, record a **macro** called **Fanuc6m_prefs** and save it in:-

C:\pmill2\NCpreferences\...

2 In the **NC Programs** > **Preferences** > **Output** tab select the **Machine Option File** as **fanuc6m.opt**.

3 Input the remaining settings exactly as set earlier for the **Heid400** in the pmuser macro.

4 Stop the **Macro** recording process.

 Copyright © Delcam Ltd

Even if already set it is essential to re-specify settings if they are to be recorded into the macro.

A **macro** file (**Fanuc6m_prefs.mac**) is now created that sets up **NC Preferences** for a post-processor option file and the command lines are shown below.

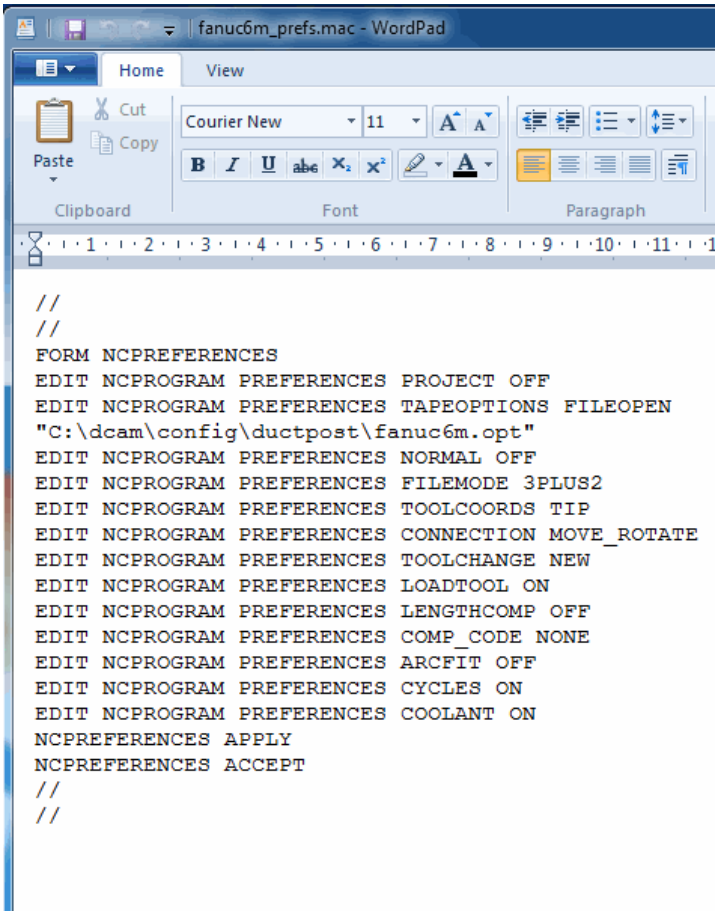


```
//
//
FORM NCPREFERENCES
EDIT NCPROGRAM PREFERENCES PROJECT OFF
EDIT NCPROGRAM PREFERENCES TAPEOPTIONS FILEOPEN
"C:\dcam\config\ductpost\fanuc6m.opt"
EDIT NCPROGRAM PREFERENCES NORMAL OFF
EDIT NCPROGRAM PREFERENCES FILEMODE 3PLUS2
EDIT NCPROGRAM PREFERENCES TOOLCOORDS TIP
EDIT NCPROGRAM PREFERENCES CONNECTION MOVE_ROTATE
EDIT NCPROGRAM PREFERENCES TOOLCHANGE NEW
EDIT NCPROGRAM PREFERENCES LOADTOOL ON
EDIT NCPROGRAM PREFERENCES LENGTHCOMP OFF
EDIT NCPROGRAM PREFERENCES COMP_CODE NONE
EDIT NCPROGRAM PREFERENCES ARCFIT OFF
EDIT NCPROGRAM PREFERENCES CYCLES ON
EDIT NCPROGRAM PREFERENCES COOLANT ON
NCPREFERENCES APPLY
NCPREFERENCES ACCEPT
//
//
```

Exercise

5 Create two more independent **NC Preference** macros for the Hied400 and Mazak option (Use the filenames **h400_prefs.mac** and **mazak_prefs.mac** respectively for the macros), and save them to:

C:\pmill2\NCpreferences\...

User Menu

In **PowerMILL** it is possible to create a ***user menu*** enabling the user to further streamline and customize the command structure. To access the ***user menu***, right mouse click within an empty area of the **PowerMILL** ***explorer***.

1 Right-click in an empty area of the **PowerMILL** ***explorer*** to access the current **user_menu** (if it exists).

This menu is created from a text file called user_menu. It must be in the directory **pmill2** in the **Home** area of the computer for the individual user, and saved as a text file (not a word Document) and with no extension. If available it is easier to obtain a copy of an existing user_menu and modify it as required.

A **user menu** can be setup to provide easy access to existing **PowerMILL commands**, Macros and Templates.

2 Load the in-active **user_menu** file (which is in the **pmill2** folder) into **Wordpad**.

Below are instructions for the **user_menu** command line input (these exist in the sample file).

```
# ************** USER MENU ***************
# comment lines
# this file must be called user_menu and be in your HOME area

# This file must be called user_menu and must be located in a directory named
# pmill2 below the user's HOME area.
# T is for Title and cannot be selected.
# S is for separator or line on the menu.
# I is a command line containing a "menu instruction" - code no. - "action".
# M is start new menu/sub-menu.
# Z is end menu/sub-menu.
# comment lines.
# format is I "Label String" 1 "Command string"

U user_menu
T "[My Menu]"
S
```

A command line will be added to the above user_menu to run the **h400_prefs** macro.

I "heid400" 1 "macro C:\pmill2\ncpreferences\h400_prefs"

3 Add the above command line to run the **h400_prefs** macro directly from the **user_menu**.

This line locates and runs the file **h400_prefs.mac** created earlier in this chapter. It needs to include the correct drive and path where the macro is located. All lettering must be in the correct upper or lower case and include the inverted commas and hyphens.

A more complete version of a typical **user_menu** is as shown below:

 Copyright © Delcam Ltd

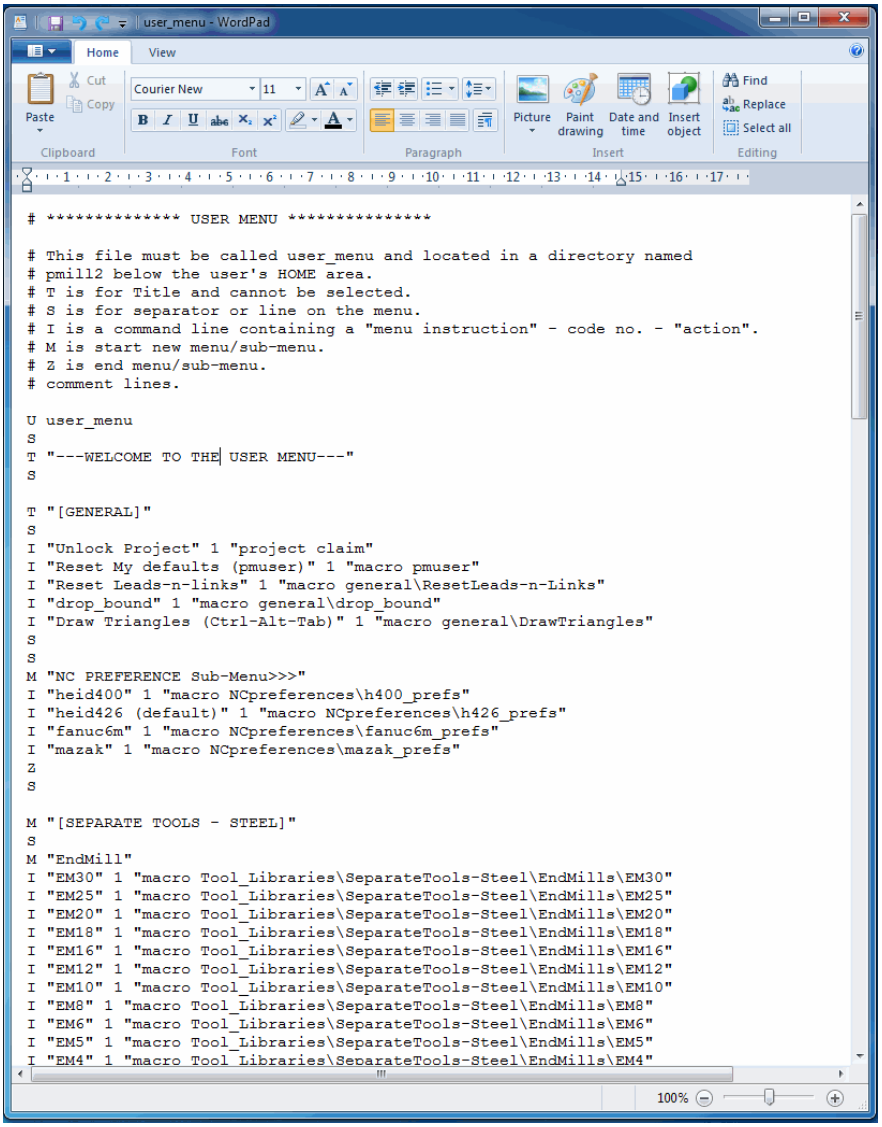

```
# ************** USER MENU ***************

# This file must be called user_menu and located in a directory named
# pmill2 below the user's HOME area.
# T is for Title and cannot be selected.
# S is for separator or line on the menu.
# I is a command line containing a "menu instruction" - code no. - "action".
# M is start new menu/sub-menu.
# Z is end menu/sub-menu.
# comment lines.

U user_menu
S
T "---WELCOME TO THE USER MENU---"
S

T "[GENERAL]"
S
I "Unlock Project" 1 "project claim"
I "Reset My defaults (pmuser)" 1 "macro pmuser"
I "Reset Leads-n-links" 1 "macro general\ResetLeads-n-Links"
I "drop_bound" 1 "macro general\drop_bound"
I "Draw Triangles (Ctrl-Alt-Tab)" 1 "macro general\DrawTriangles"
S
S
M "NC PREFERENCE Sub-Menu>>>"
I "heid400" 1 "macro NCpreferences\h400_prefs"
I "heid426 (default)" 1 "macro NCpreferences\h426_prefs"
I "fanuc6m" 1 "macro NCpreferences\fanuc6m_prefs"
I "mazak" 1 "macro NCpreferences\mazak_prefs"
Z
S

M "[SEPARATE TOOLS - STEEL]"
S
M "EndMill"
I "EM30" 1 "macro Tool_Libraries\SeparateTools-Steel\EndMills\EM30"
I "EM25" 1 "macro Tool_Libraries\SeparateTools-Steel\EndMills\EM25"
I "EM20" 1 "macro Tool_Libraries\SeparateTools-Steel\EndMills\EM20"
I "EM18" 1 "macro Tool_Libraries\SeparateTools-Steel\EndMills\EM18"
I "EM16" 1 "macro Tool_Libraries\SeparateTools-Steel\EndMills\EM16"
I "EM12" 1 "macro Tool_Libraries\SeparateTools-Steel\EndMills\EM12"
I "EM10" 1 "macro Tool_Libraries\SeparateTools-Steel\EndMills\EM10"
I "EM8" 1 "macro Tool_Libraries\SeparateTools-Steel\EndMills\EM8"
I "EM6" 1 "macro Tool_Libraries\SeparateTools-Steel\EndMills\EM6"
I "EM5" 1 "macro Tool_Libraries\SeparateTools-Steel\EndMills\EM5"
I "EM4" 1 "macro Tool_Libraries\SeparateTools-Steel\EndMills\EM4"
```

This is the **user_menu** file as displayed in the **Wordpad**.

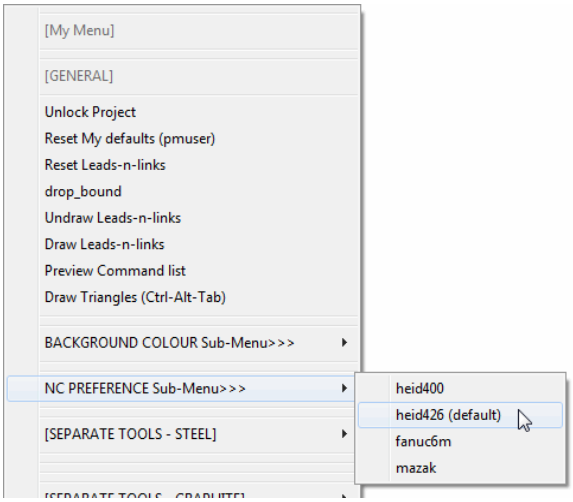

Note the **NC-Preferences** section uses a ***sub-menu***:

M denotes the start of the sub-menu.

Z denotes the end of the sub-menu.

Copyright © Delcam Ltd

19. Tutorials

Y-Branch

1 Select **File** > **Delete All** and **Tools** > **Reset Forms**

2 **Import** the **Model**:-

….\PowerMILL_Data\Models\Y-BranchDuct.dgk

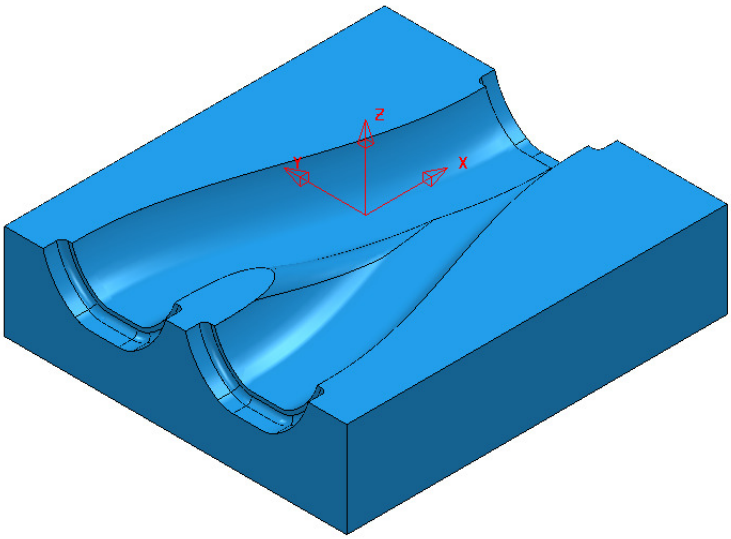

3 **Save Project As**:

….\COURSEWORK\PowerMILL_Projects\Y-Branch-MC

4 Create the following **Tools**:-

Dia 16 with a 3 ***Tip Radius*** named **D16TR3**

Dia 12 ***End Mill*** named **EM12**

Dia 12 ***Ball Nose*** named **BN12**

Dia 5 ***Ball Nose*** named **BN5**

5 Create an ***Active*** **NC Program**.

*Newly processed **Toolpaths** are automatically added to an **Active NC Program**.*

6 **Activate** the existing **Workplane 1**, then using the default settings **Calculate** a suitable **Block**, and **Rapid Move Heights**.

7 Create a ***3D* Model Area Clearance *Toolpath*** using the ***Tool* D16TR3**.

8 Create an **Offset Flat Finishing *Toolpath*** on the base of the Y-form using the ***Tool* EM12**.

9 Create two suitable **Boundaries** (***Selected Surface***) to limit the ***Finishing Toolpaths*** for the **BN12** and **BN5** tools. (Note:- For the **BN5** tool select all of the end recess surfaces, including the vertical faces, and **Tick** the box marked **Top** in the **Boundary** dialogue).

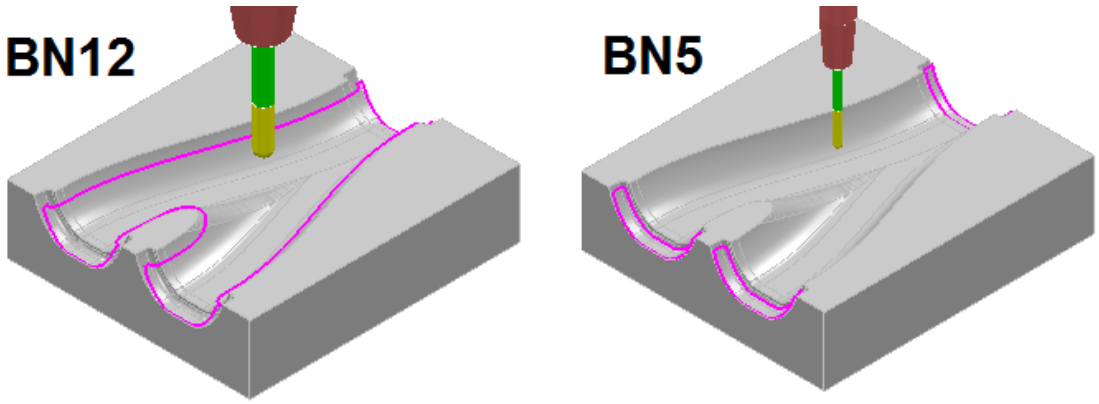

10 **Activate** the ***Tool* BN12**.

11 Create a **Constant Z Finishing *Toolpath*** (limited to be inside the ***BN12* Boundary**) using both a Min (0.01) and Max (0.5) **stepdown** combined with a suitable **Cusp height** (0.03) with the **Machine down to flats** box ***ticked***.

12 **Activate** the ***Tool* BN5**.

13 Create a suitable **3D Offset Finishing *Toolpath*** (limited to be inside the ***BN5* Boundary**) using a **Stepover** of 0.25, and with both **Spiral** and **Smoothing** ticked.

14 Perform a full **ViewMILL simulation** on the ***Active* NC Program**.

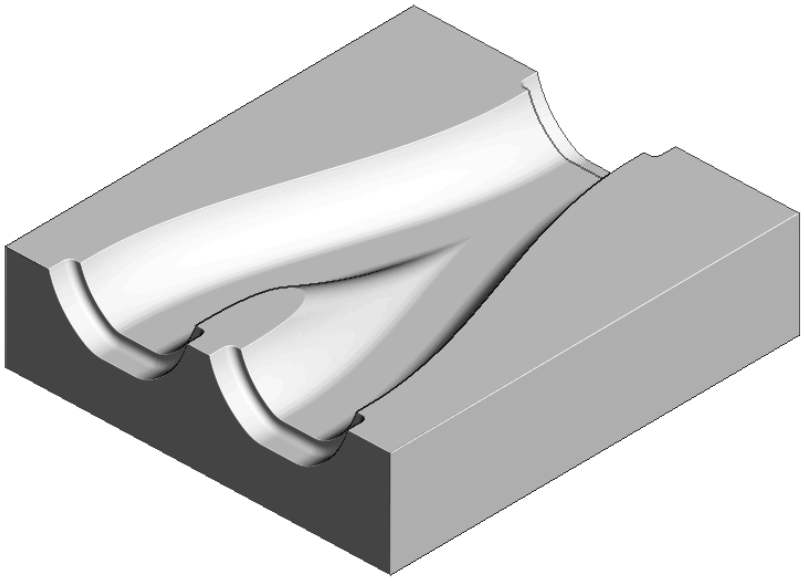

Save the **Project**.

 Copyright © Delcam Ltd

Corner Bowl

1 Select **File** > **Delete All** and **Tools** > **Reset Forms**

2 **Open** the (read only) **Project**:-

….\PowerMILL_Data\Projects\CnrBwl-Start

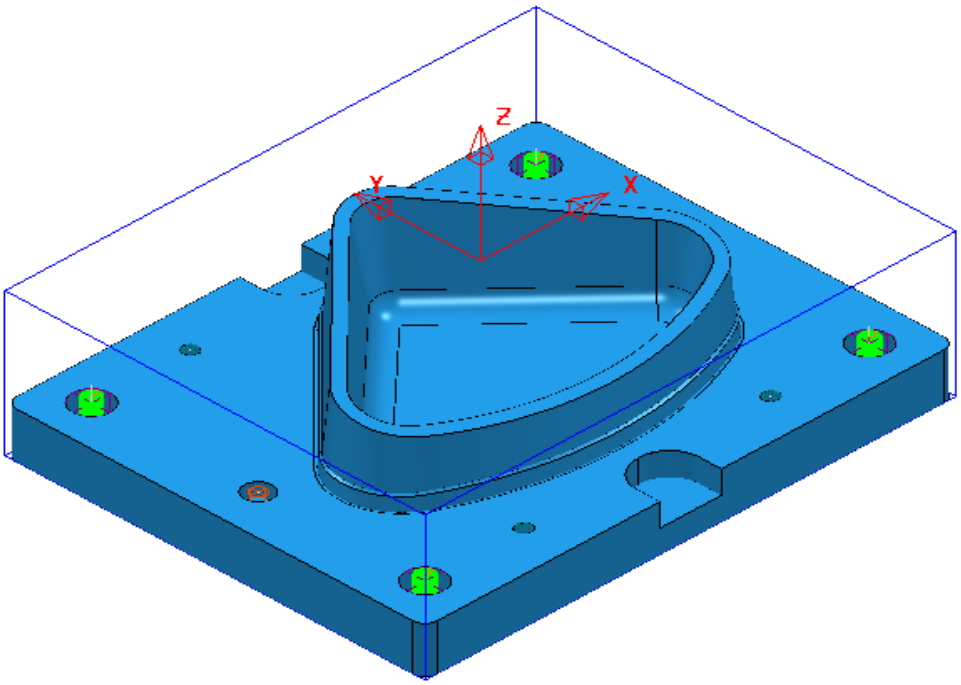

3 **Save Project As**:

….\COURSEWORK\PowerMILL_Projects\CornerBowl-Example

The **Project** contains; a **Model**, 2 **Workplanes**, 9 **Tools** (including a ***Form*** **Tool** along with the **Pattern** used to create it), 7 **Toolpaths** that fully machine the underside (OP1), and an **NC-Program** named ***OP1-CnrBwl-All***.

Setup

4 **Activate** the **Workplane** named **MC-Datum-OP2**.

5 Create a new **NC Program** named **OP2-CnrBwl-All**.

*The New **NC Program** will be **Active** on creation. Newly processed **Toolpaths** are automatically added to an **Active NC Program**.*

6 Using the default settings, **Defined by *Box*** and **Type *Model***, **Calculate** a **Block**, change the **Max Z** value to **0** and ***lock*** it before selecting **Accept**.

7 In the **Rapid Move Heights** dialog enter the **Workplane *MC-Datum-OP2*** and **Calculate** before selecting **Accept**.

Area Clearance – Tool D25TR3

1. **Activate** the ***Tool*** **D25TR3**.
2. From the **Strategy Selector**, open the ***3D*** **Area Clearance** strategy dialog and select a **Model Area Clearance** strategy.
3. Enter the ***Toolpath name*** **OP2-D25TR3-RGH1**.
4. In the **Limit** page ensure that no **Boundary** is ***Active*** and then select ***Allow tool centre outside the block*** .

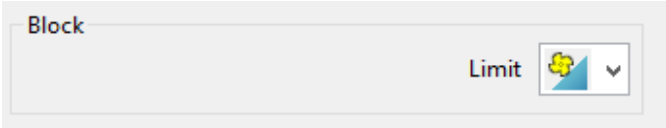

5. In the **Model area clearance** page, use ***Style*** **Offset model**, with **Thickness 0.5**, **Stepover 5**, **Stepdown 25**.
6. In the **Offset** page, tick **Spiral**.
7. In the **Step cutting** page, tick **Step Cutting** and input ***Step-up*** **2**, ***Detect material thicker than*** **0**, and ***Expand area by*** **0**.
8. In the **Unsafe segment removal** page, tick ***Remove segments smaller than threshold***, with ***Threshold*** **0.95**, and un-tick ***Only remove segments from enclosed areas***.
9. In the **Flat machining** page, set ***Machine flats*** to **Level**.
10. In the **Approach** page, tick ***Add approaches from outside***.
11. In the main **Leads and Links** dialog set:-
    - **Lead in/out** ***1st choice*** set **Vertical arc** with ***Distance*** **15**, ***Angle*** **90**, ***Radius*** **8**.
    - **Lead in** ***2nd choice*** select **Ramp**, and in the **Ramp options** dialog set ***Follow*** **Circle**, ***Max zig angle*** **4**, ***Circle Diameter (TDU)*** **0.65**.
12. **Accept** the **Leads and Links** dialog.
13. Select **Calculate** in the main **Area Clearance** dialog to create the **Toolpath**.
14. **Close** the **Area Clearance** dialog.

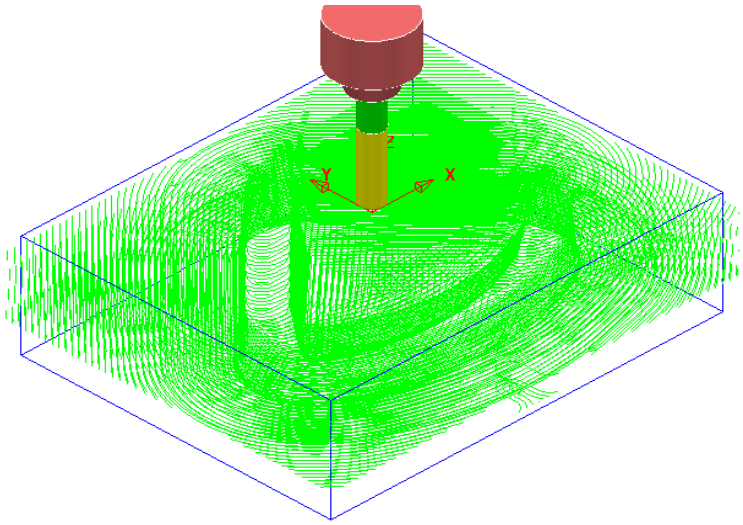

*The **toolpath** is automatically added to the **Active NC Program** list.*

 Copyright © Delcam Ltd

Finish Machining – Tool BN16

1 **Activate** the ***Tool*** **BN16**.

2 In the **PowerMILL *explorer*** select **Boundaries** – **Create Boundary** – **Shallow**.

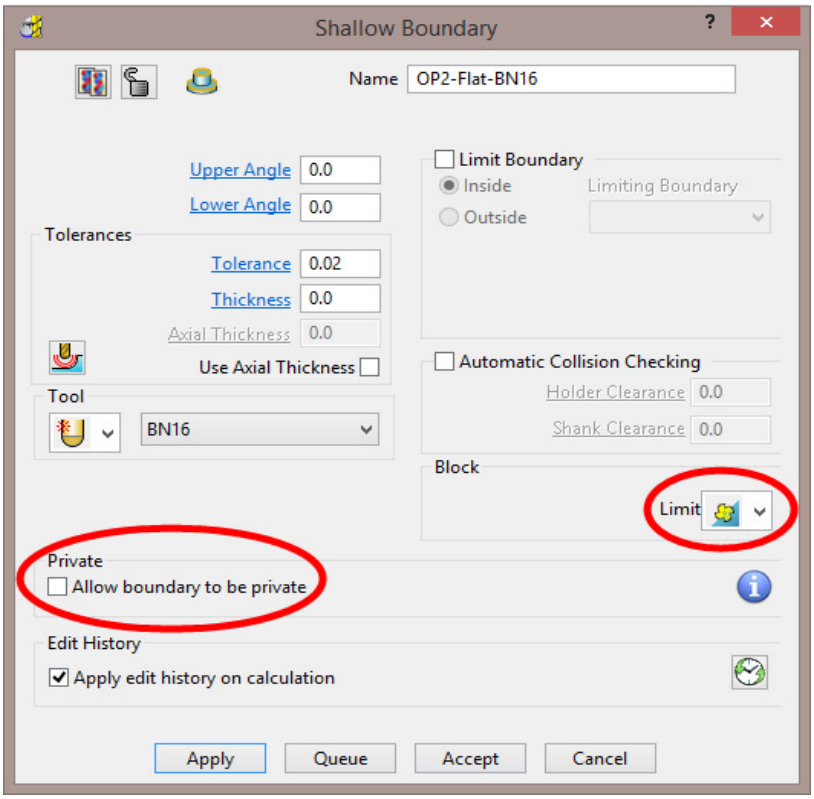

3 Enter data exactly as shown above, and un-tick the box ***Allow boundaries to be private*** in the **Shallow Boundary** dialog before selecting **Apply**.

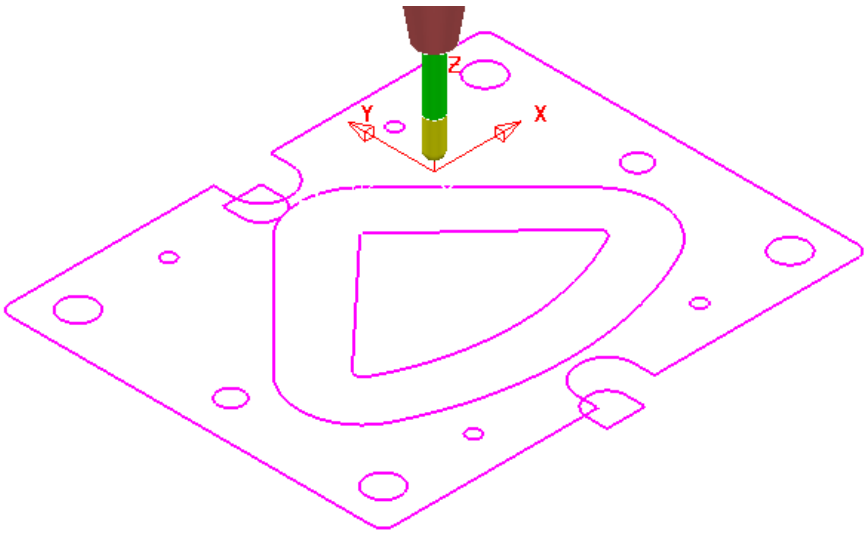

4 **Select** and **Delete** all except the 2 innermost **Boundary** segments.

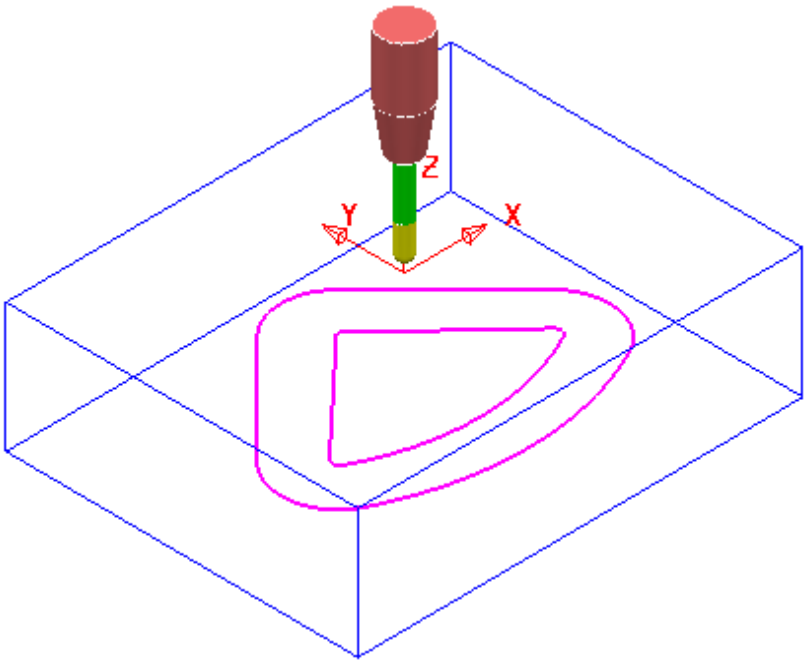

5 Right mouse click on the new ***Boundary*** **Flat-BN16** and from the local menu select **Curve Editor**.

6 In the **Curve editor** select the outer ***Boundary*** **segment** and apply an **Offset** of **2**.

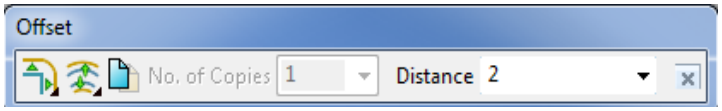

7 Then select the inner ***Boundary*** **segment** and apply an **Offset** of **-6**.

8 Select the **Green** tick at the far right of the **Curve Editor**, toolbar to accept and return the changes back to **PowerMILL**.

9 From the **Strategy Selector**, open the **Finishing** dialog and select a **Steep and Shallow Finishing** strategy.

10 In the **Shallow Finishing** dialog enter the ***Toolpath name*** **OP2-BN16-FIN1**.

11 In the **Limit** page, select the ***Boundary*** **Flat-BN16** with ***Trimming*** set to **Keep inside**.

12 In the **Steep and Shallow finishing** page enter data exactly as shown below.

 Copyright © Delcam Ltd

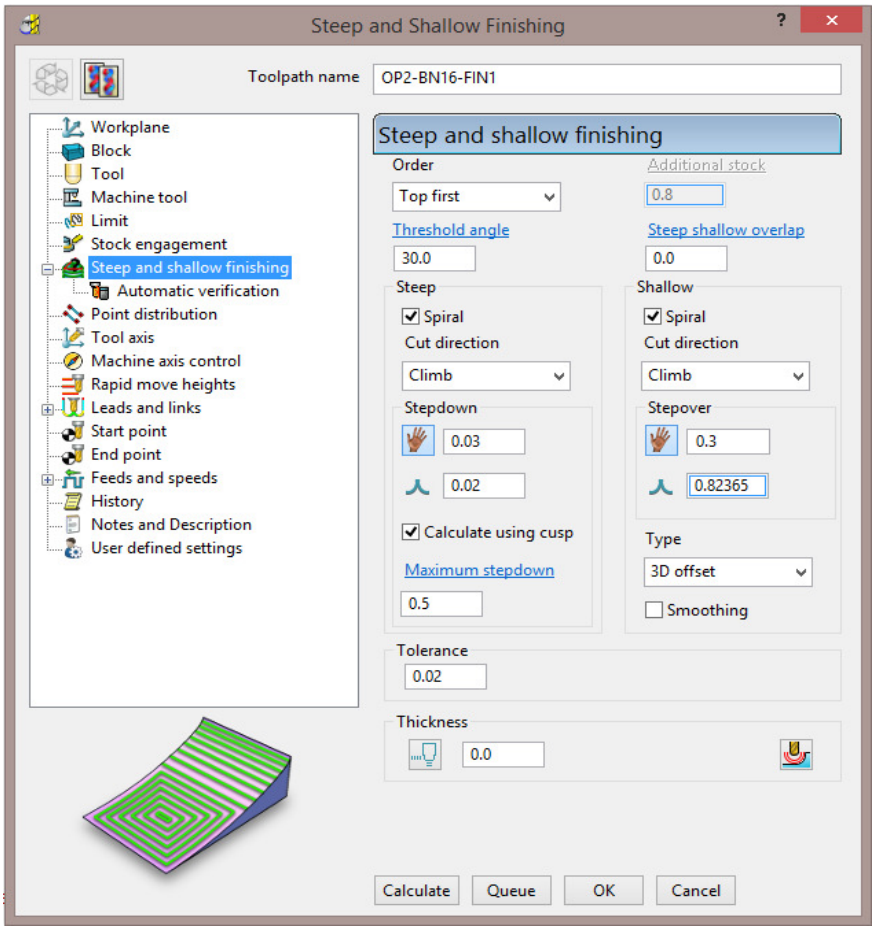

13 In the main **Leads and Links** dialog select **Lead in/out** ***1st choice*** set **Vertical arc** with **Distance** **0**, **Angle** **90**, **Radius** **8**.

14 **Accept** the **Leads and Links** dialog.

15 Select **Calculate** in the main **Steep and Shallow finishing** dialog to create the **Toolpath**.

16 **Close** the **Steep and shallow finishing** dialog.

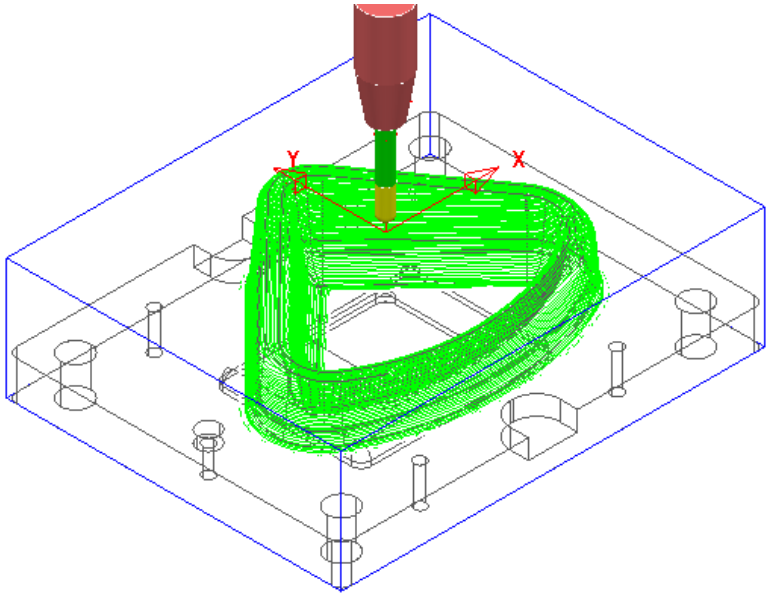

Finish Machining – Tool EM30

1. Ensure that no **Boundary** is **Active**.
2. **Activate** the ***Tool* EM30**.
3. From the **Strategy Selector**, open the **Finishing** strategy dialog and select an **Offset Flat Finishing** strategy.
4. In the **Offset Flat Finishing** dialog enter ***Toolpath name* OP2-EM30-FlatFIN1**.
5. In the **Limit** page, select ***Limit tool centre to block edge***.

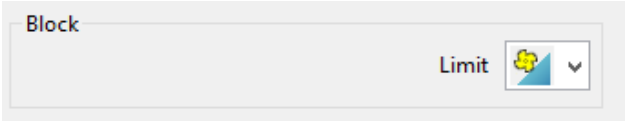

6. In the ***Offset flat finishing*** page, enter data exactly as shown below (Note the ***tick box*** settings!).

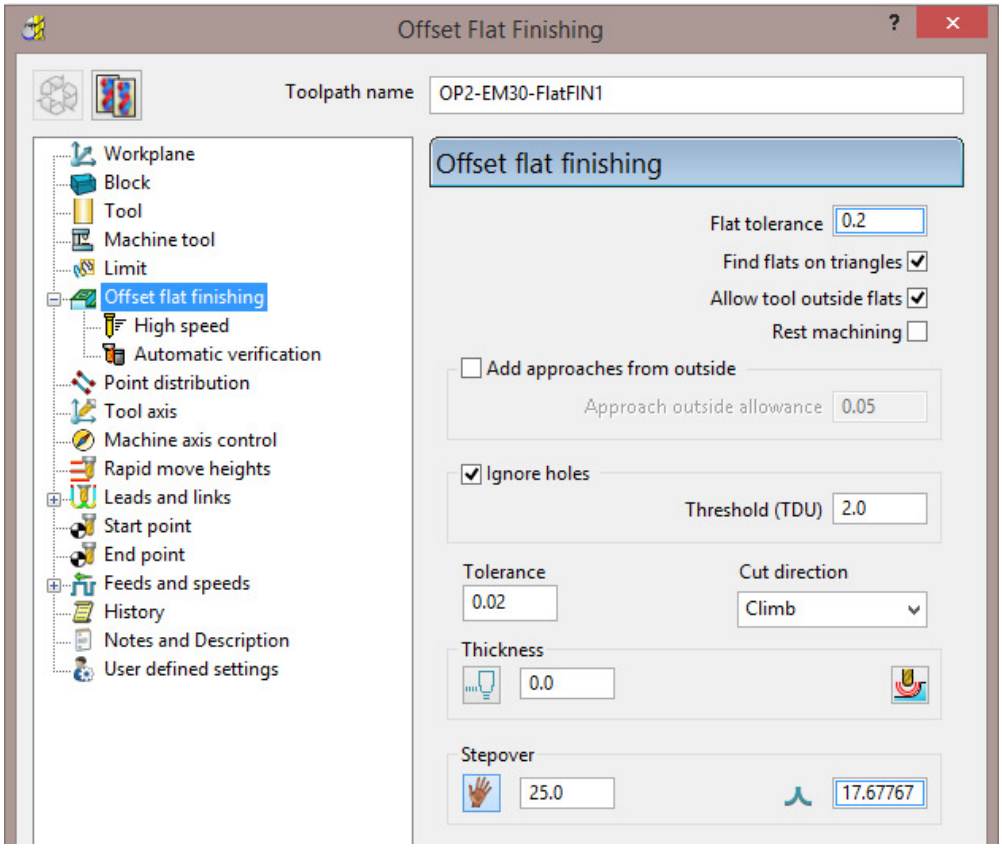

7. In the main **Leads and Links** dialog select **Lead in/out *1st choice*** set **Vertical arc** with **Distance 15**, **Angle 90**, **Radius 12**.
8. **Accept** the **Leads and Links** dialog.
9. Select **Calculate** in the main **Offset flat finishing** dialog to create the **Toolpath**.
10. **Close** the **Offset Flat Finishing** dialog.

Copyright © Delcam Ltd

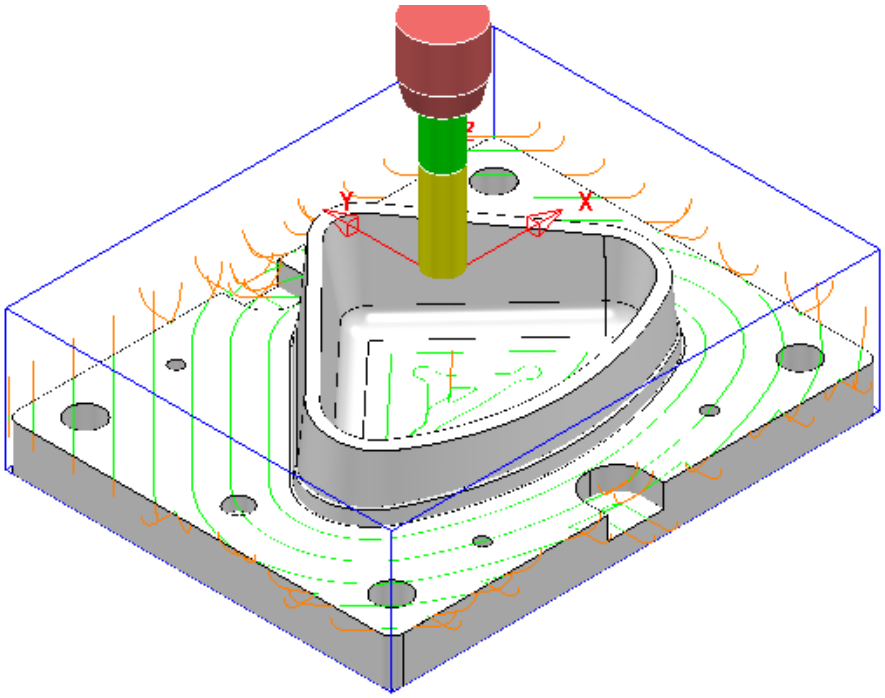

Finish Machining – Tool D16TR3

1 **Activate** the ***Tool*** **D16TR3**.

2 Select the ***upper edge*** of the **Surface Model** 3D form**.**

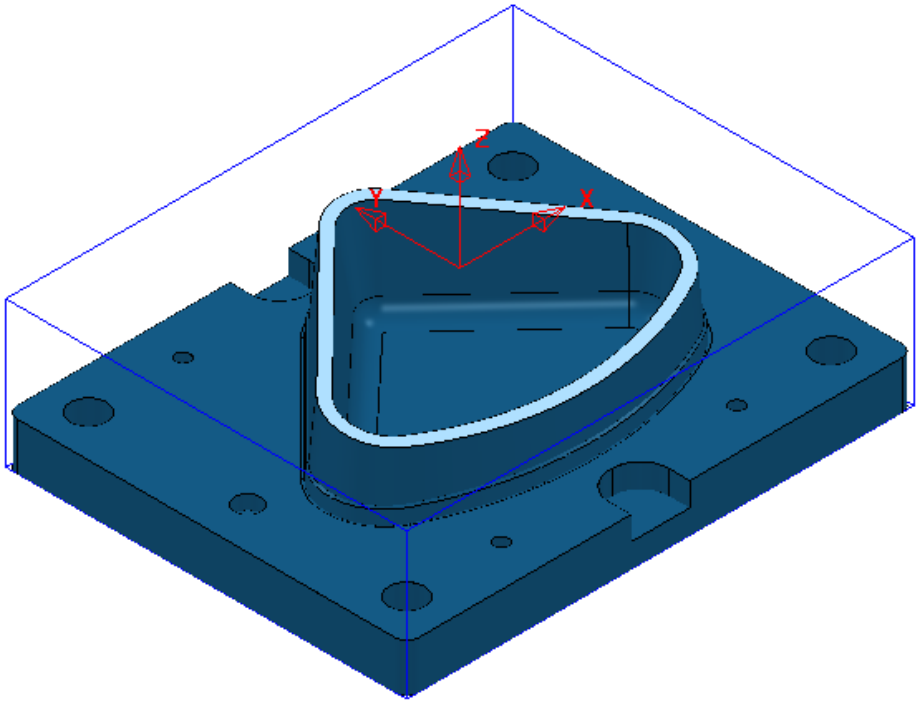

3 In the **PowerMILL** ***explorer*** select, **Boundaries – Create Boundary – User Defined**.

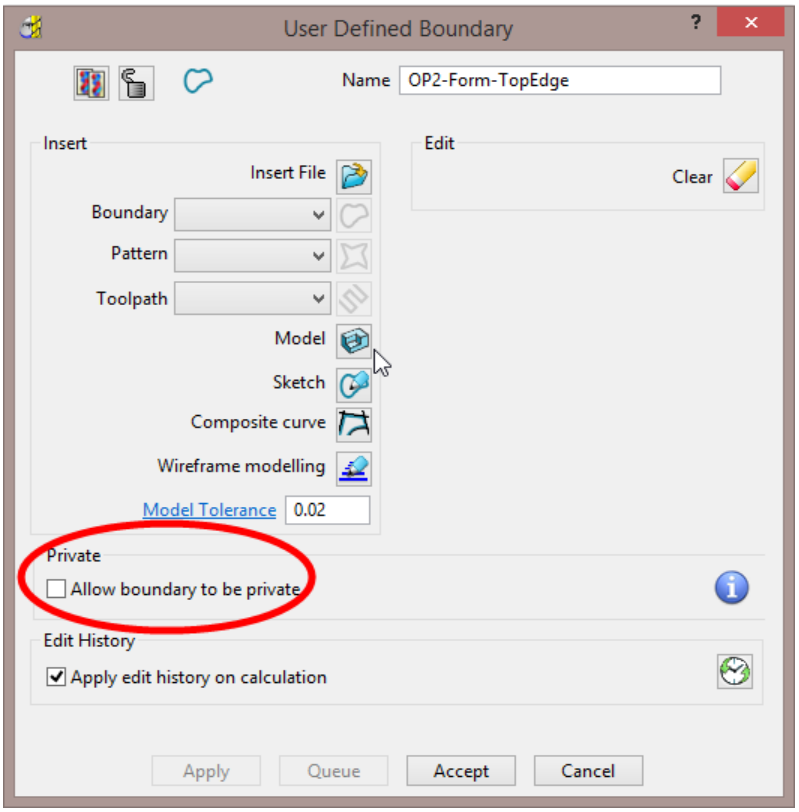

4 In the above **User defined Boundary** dialog ***un-tick*** the box **Allow boundaries to be private** before selecting the **Insert Model** option Model .

5 Rename the **Boundary** as **OP2-Form-TopEdge** before selecting **Accept** to close the dialog.

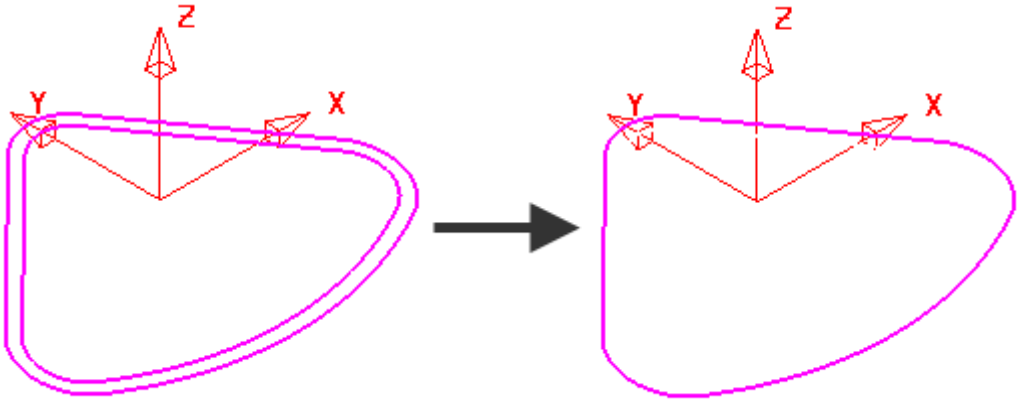

6 **Select** and **Delete** the inner **Boundary** segment (as shown above).

7 From the **Strategy Selector**, open the **Finishing** dialog and select a **Constant Z Finishing** strategy.

8 In the **Constant Z** Finishing dialog enter the **Toolpath** name **OP2-D16TR3-FIN1**.

 Copyright © Delcam Ltd

9 In the ***Limit*** page select the ***Boundary*** **Form-TopEdge** with ***Trimming*** set to **Keep Outside**.

10 In the ***Limit*** page **Z Limits**:-

- Tick the **Minimum** box and use the ***picking*** option 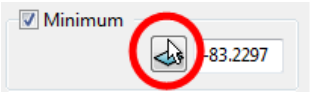

to trap and insert the value **-85** (left mouse click within the top of the base surface).
- Tick the **Maximum** box and insert the value **-79** (this is **6mm** above the top of the base surface).

11 In the ***Constant Z finishing*** page, enter data exactly as shown below (Note the tick box settings!).

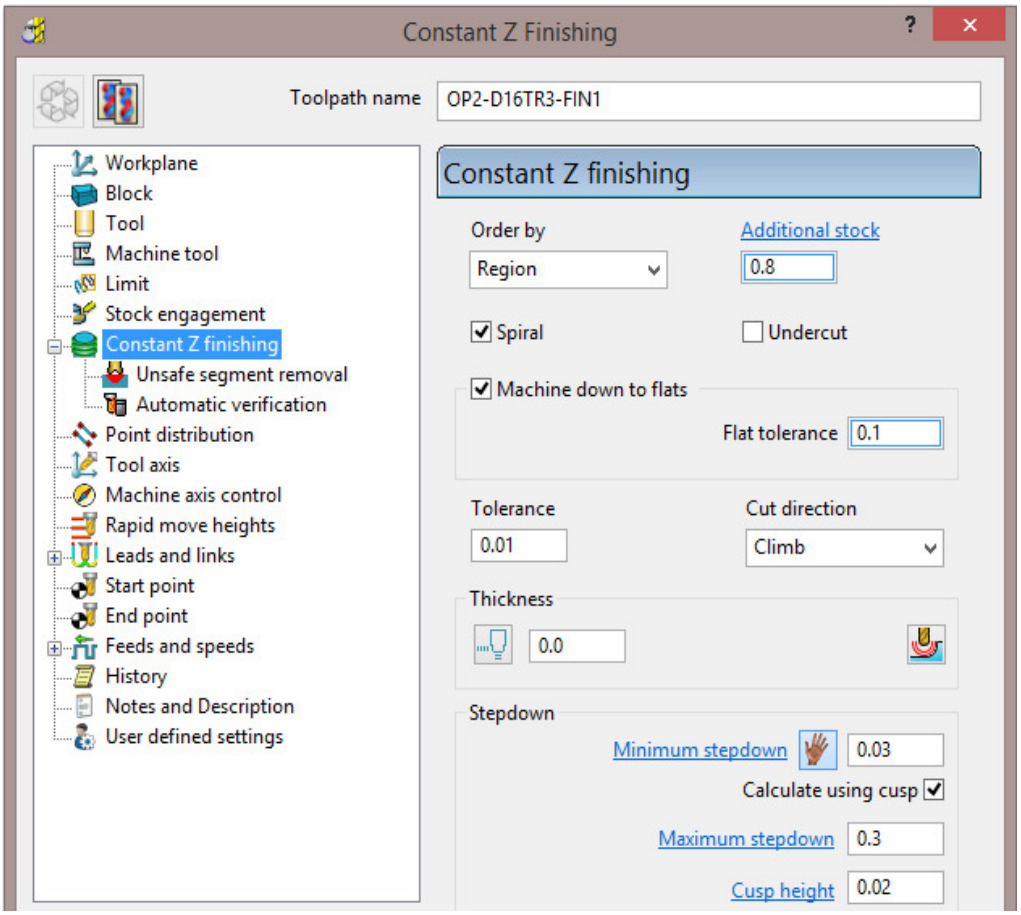

12 In the main **Leads and Links** dialog:-

- In **Lead in *1st choice*** set **Surface normal arc** with **Distance** **0**, **Angle** **90**, **Radius** **8**.
- In **Lead out *1st choice*** set **Vertical arc** with **Distance** **0**, **Angle** **90**, **Radius** **8**.

13 **Accept** the **Leads and Links** dialog.

14 Select **Calculate** in the main **Constant Z finishing** dialog to create the **Toolpath**.

15 **Close** the **Constant Z finishing** dialog.

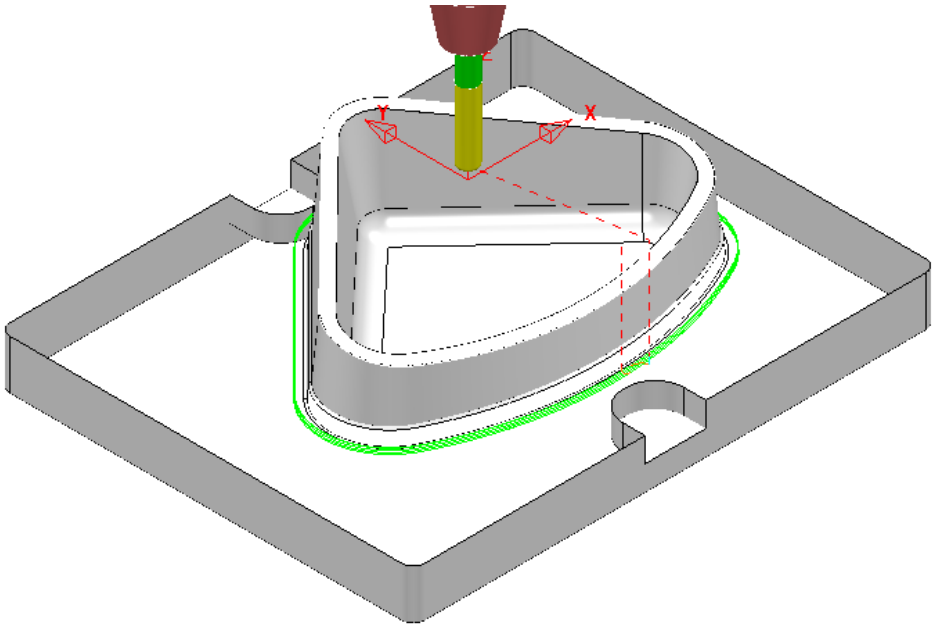

Finish Machining – Tool EM16

1. Re-open the **OP2-D16TR3-FIN1 toolpath** dialog and select ***Create a new toolpath based on this one*** .
2. Rename the new **toolpath** as **OP2-EM16-FIN1**.
3. **Activate** the ***Tool*** **EM16**.
4. In the **Limit** page, **Z Limits** section, update the **Maximum** value to **-82** (this is approx. **3mm** above the top of the base surface).
5. In the ***Constant Z finishing*** page, **Stepdown** section, enter the data exactly as shown below.

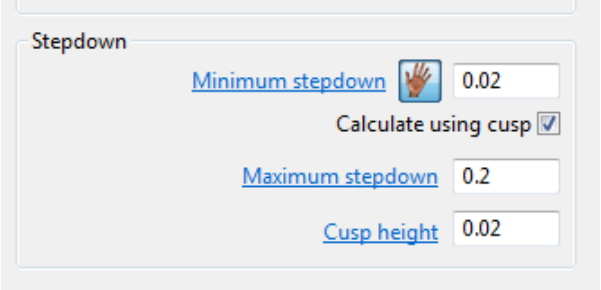

6. Select **Calculate** in the main **Constant Z finishing** dialog to create the **Toolpath**.

 Copyright © Delcam Ltd

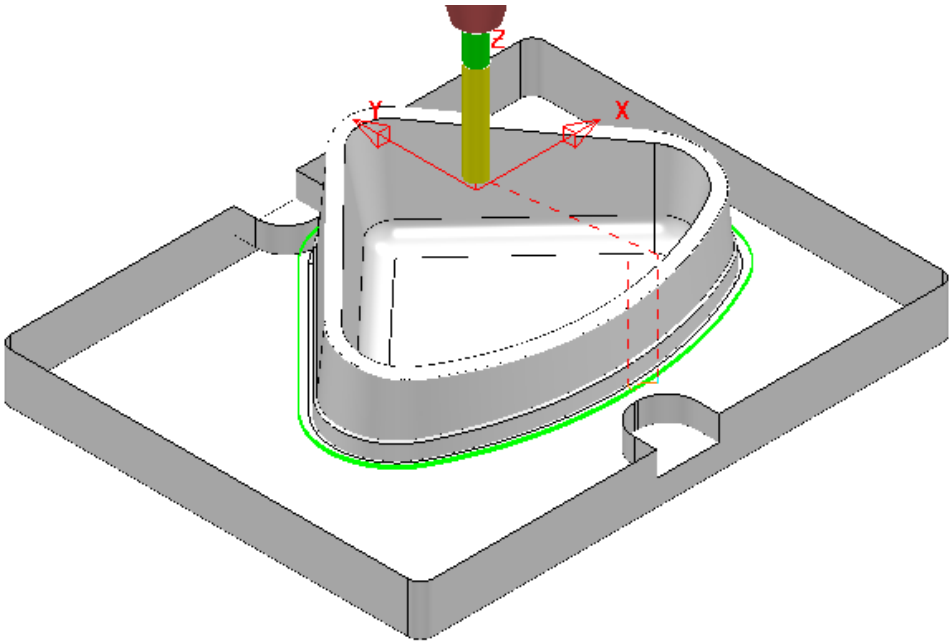

Finish Machining – Tool FormTool-1

The 40 Degree angle on top of the step near the bottom of the 3D form will be machined with a **Form Tool**. The profile for the **tool tip** was created from a **Pattern** which in turn was constructed using the **Curve Editor** options.

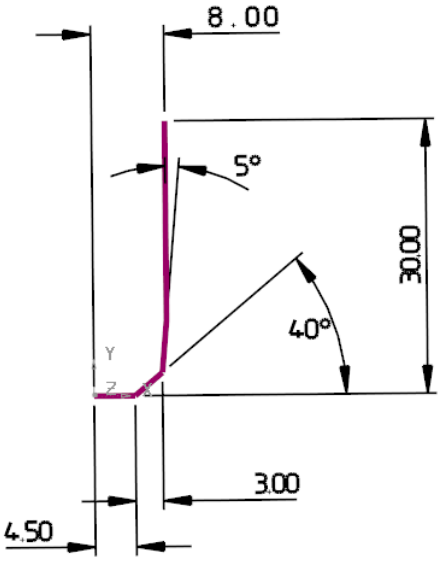

The **Pattern** must be created in the **+ve X** and **Y** quadrant, relative to the **Transform** (Global Datum) for it to be valid when used in **Form Tool** creation options. Once the **Form Tool** has been created it will no longer be dependent on the **Pattern**.

*The above **Tool** and original **Pattern** already exists in the start up **Project**.*

1 Select a ***View down Z*** and un-draw all items except the existing **Pattern *FormTool-1***.

2 **Zoom** into the lower area of the **Pattern** and from the **main** toolbar select the **Measurer** .

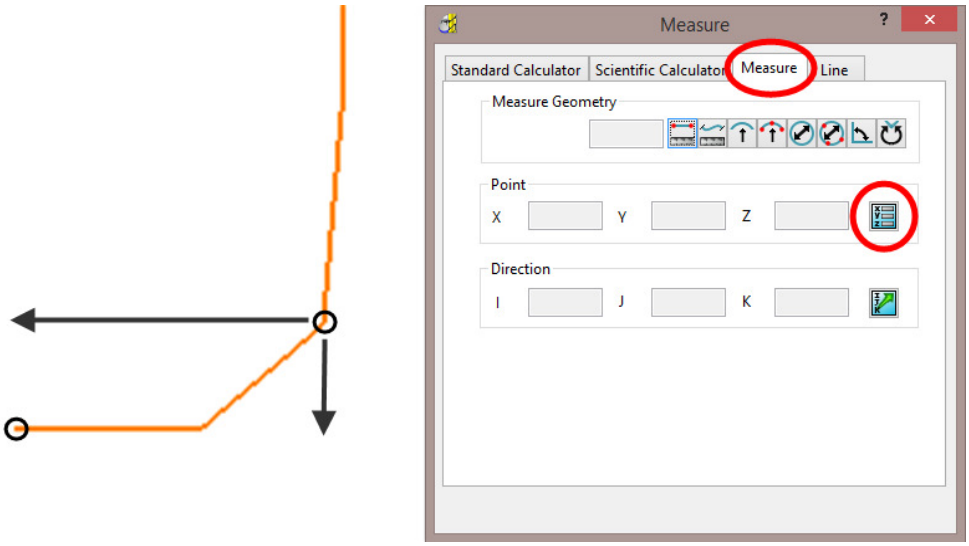

3 With the **Measure** tab selected, click on the **Open the position input** option .

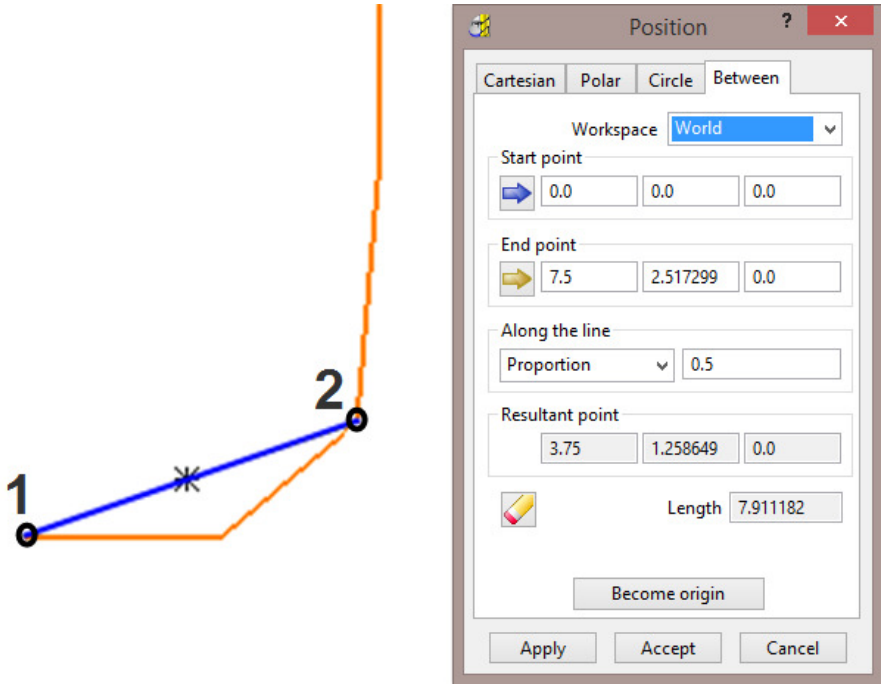

4 In the **Position** dialog select the **Between** tab

5 On the **Pattern** in the graphics area, left click on ***key point* 1** followed by ***key point* 2** (shown above left).

6 Make a note of the displayed **End point** values **7.5** and **2.517299**.

Next a new **Pattern *segment*** will be created along the top, inner edge of the 40 Degree chamfer (corresponding to ***key point* 2** above). The above values will be used to offset (**7.5**) and move (**Z-2.517299**) the new **Pattern segment** to provide a path for the form tool centre (***key point* 1**).

 Copyright © Delcam Ltd

7 Select all of the **surfaces** that form the top face of the step near the bottom of the 3D form (shown shaded light below).

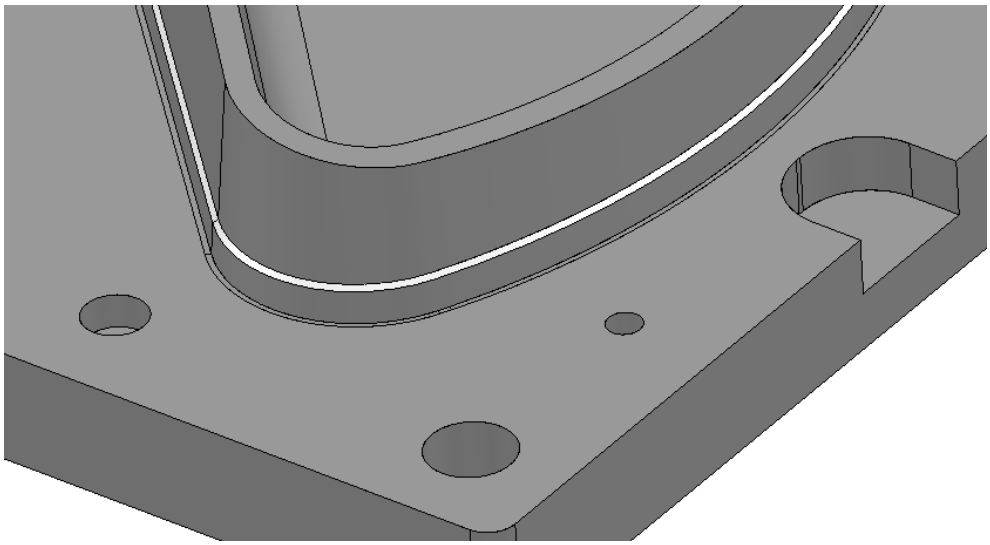

8 In the **PowerMILL *explorer*** right mouse click on **Patterns** and from the local menu select **Create Pattern**.

9 ***Rename*** the new **Pattern** as **OP2-Chamfer40Deg**.

10 Right mouse click on the new **Pattern** and from the local menu select ***Insert - Model*** (***Pattern segments*** will be created along the open edges of the ***selected model***).

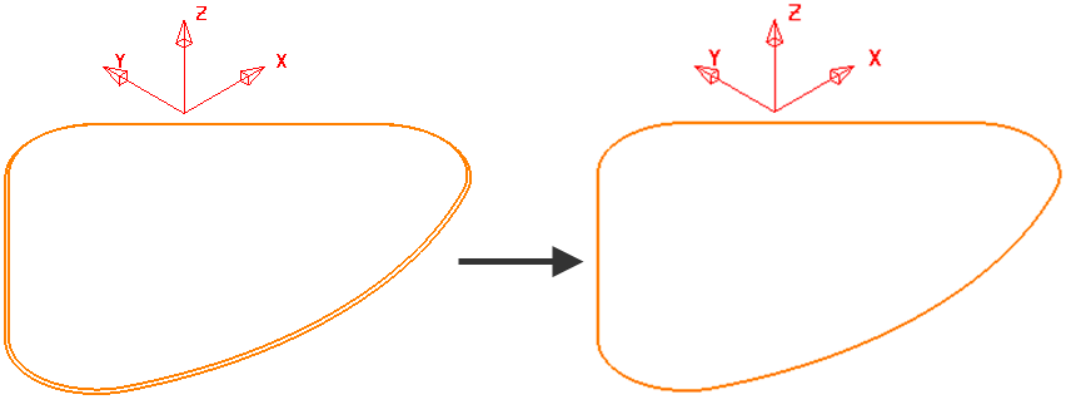

11 **Select** and **Delete** the <u>outer</u> ***Pattern*** segment (as shown above).

12 Right mouse click on the **Pattern** and from the local menu select **Curve Editor**.

13 Select the **Pattern** segment.

14 In the ***Curve Editor*** toolbar select **Offset item** (2D Round)

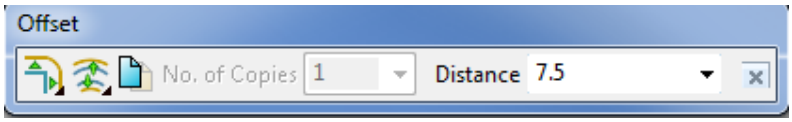

15 Input a **Distance** value of **7.5** and press return to accept the action.

16 Select the **Pattern** segment.

17 In the ***Curve Editor*** toolbar select **Move item**.

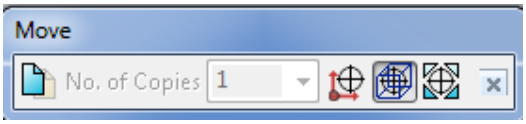

18 In the Data Input box below the main graphics area enter and return the ***relative*** XYZ move values **0 0 -2.517299**.

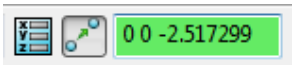

19 Select the ***green tick*** to accept the changes and return the **Pattern** to **PowerMILL**.

20 Right click on the Pattern, segment and from the local menu select Instrument to display the direction arrow.

21 If the arrow is pointing along the upcut direction (anticlockwise if viewed from above) select **Edit** - **Reverse Selected**.

The **Pattern** is now suitably positioned for use as a ***tool centre***, **drive curve** to be used in either a **2D Curve Profile** or **Pattern Finishin**g strategy.

22 Ensure that no **Boundary** is **Active**.

23 **Activate** the Tool **FormTool-1**.

24 From the **Strategy Selector**, open the **2.5D Area Clearance** strategy dialog and select the **2D Curve Profile** strategy.

25 In the **2D Curve Profile** dialog enter the **Toolpath** name as:- **OP2-FormTool1-Chamfer**.

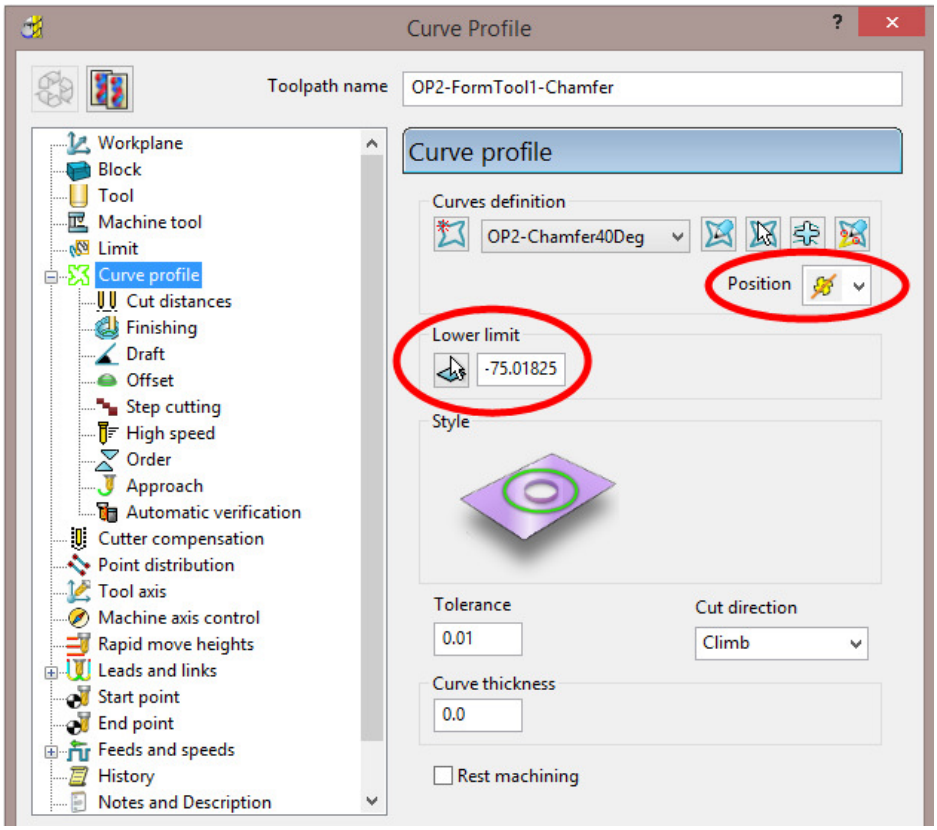

26 Set the **Position** option to ***The centre of the tool follows the pattern*** .

 Copyright © Delcam Ltd

27 Select the **Pick the lowest Z Height** option and snap at any point along the drive curve, Pattern segment.

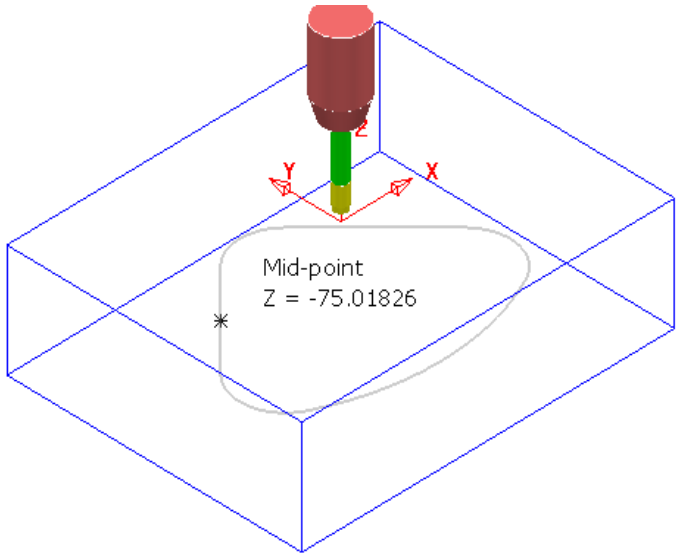

*The snapped **Z height value** is inserted into the **Lower limit** box.*

28 In the main **Leads and Links** dialog select **Lead in/out** *1st choice* set **Horizontal arc** with ***Distance*** **0**, ***Angle*** **90**, ***Radius*** **12**.

29 **Accept** the **Leads and Links** dialog.

30 Select **Calculate** in the main **Offset flat finishing** dialog to create the **Toolpath**.

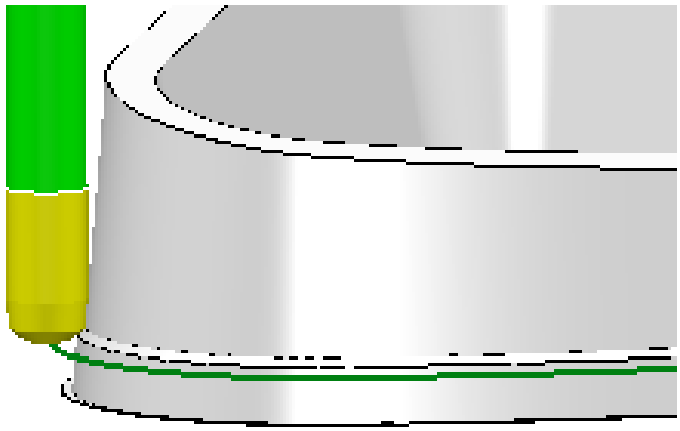

The Form tool is accurately aligned to the angle across the top of the step.

31 **Close** the **2D Curve Profile** dialog.

Hole Feature – Drilling

Drilling strategies can only be performed on **Hole Features** and not directly on the component **Model**.

*To ensure that the **Hole Features** are created vertical relative to the active **Z axis** the **Block** must first be deleted.*

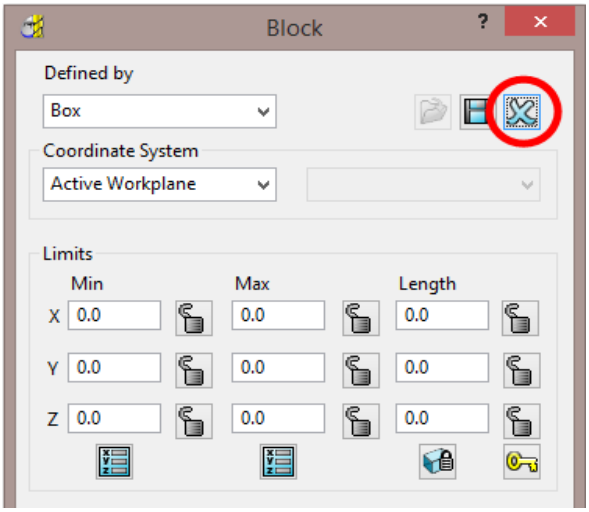

1 From the **main** toolbar select the **Block** dialog and click on the ***blue cross*** to delete the current **Block** definition.

2 Select the whole of the component **model**.

3 In the **PowerMILL *explorer***, right mouse click on **Feature Sets** and from the local menu select **Create Holes**.

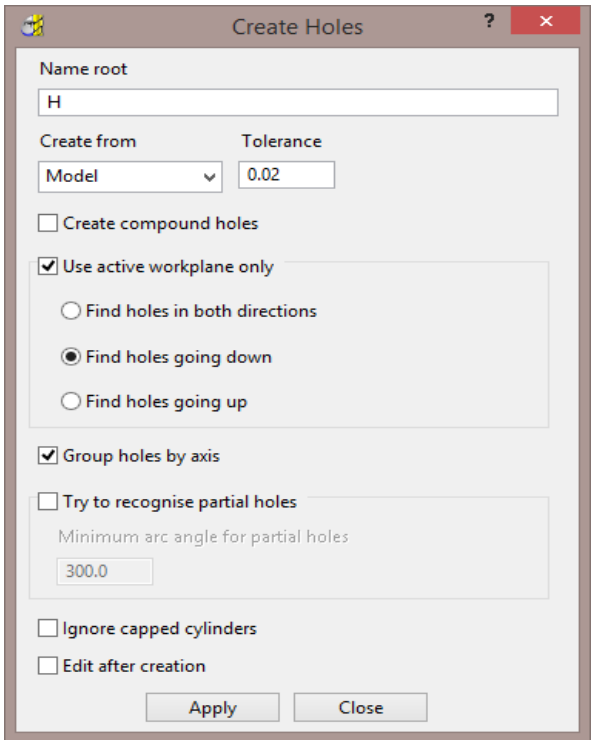

4 Enter the data into the **Feature** dialog exactly as shown above before selecting **Apply**.

 Copyright © Delcam Ltd

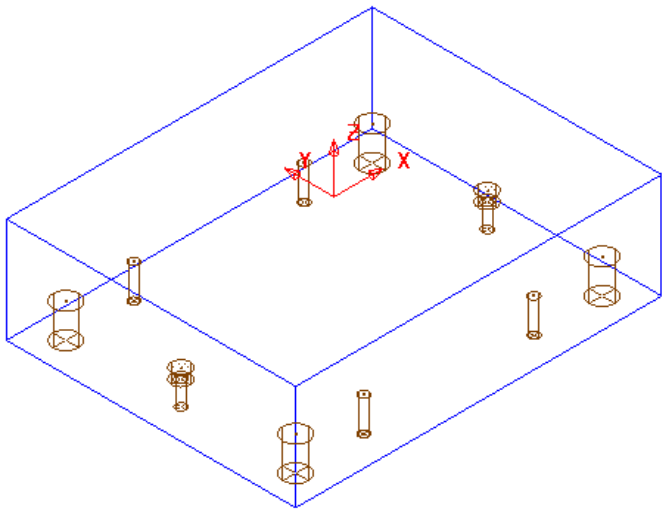

The **Feature Set** contains a total of **12** defined **Hole Features**.

*Most of the **Hole** detail has been dealt with in **OP1** so the only remaining **Features** that require machining from this side are the 2 Counterbores.*

5 **Rename** the new **Feature Set** as **OP2-Holes**.

6 **Activate** the toolpath **OP2-D16TR3-FIN1** to reinstate the **Block** and activat**e** the ***Tool*** **D16TR3**.

7 From the **Strategy Selector**, open the **Drilling** strategy dialog and select the **Drilling** strategy.

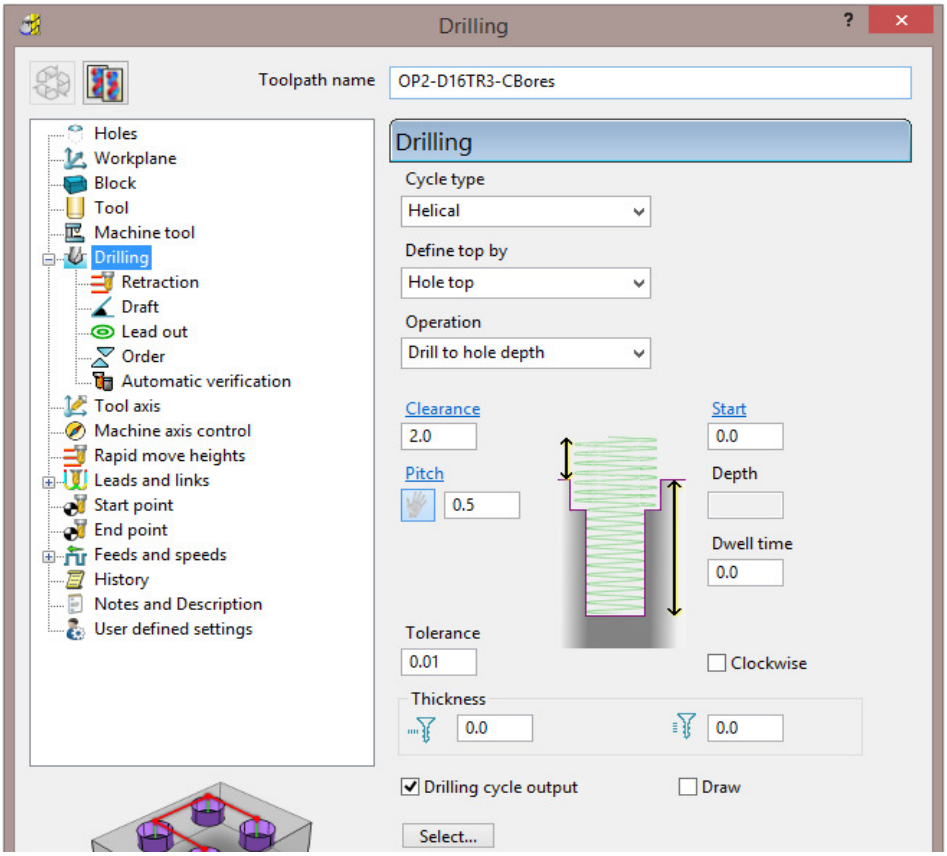

8 Select ***Cycle type*** **Helical** and input remaining data into the **Drilling** dialog exactly as shown above and then click on the **Select** tab.

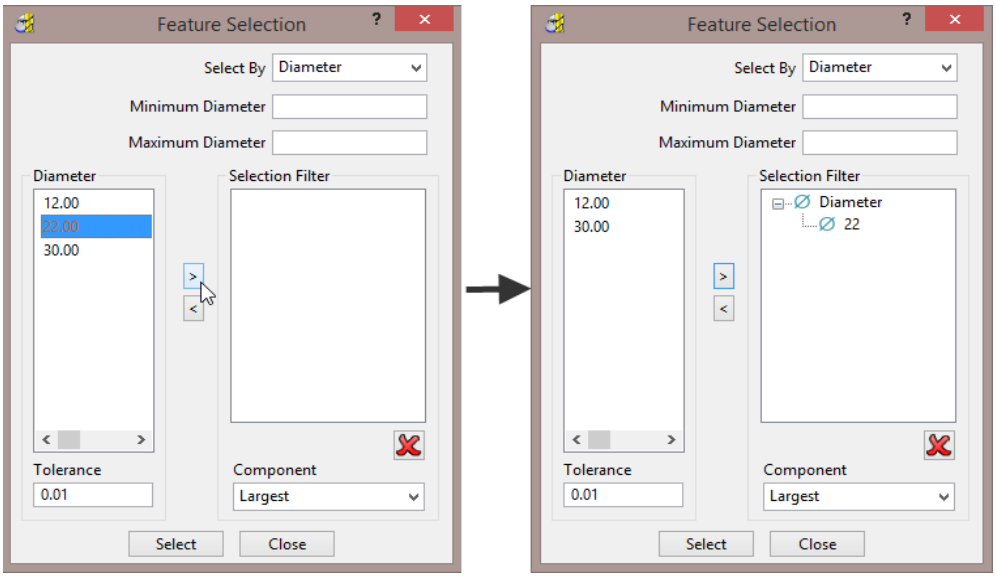

9 In the **Diameter** box select **22.00** and click on > to add these holes to the **Selection Filter** box.

10 **Close** the **Feature Selection** dialog and select **Calculate** in the main **Drilling** strategy dialog.

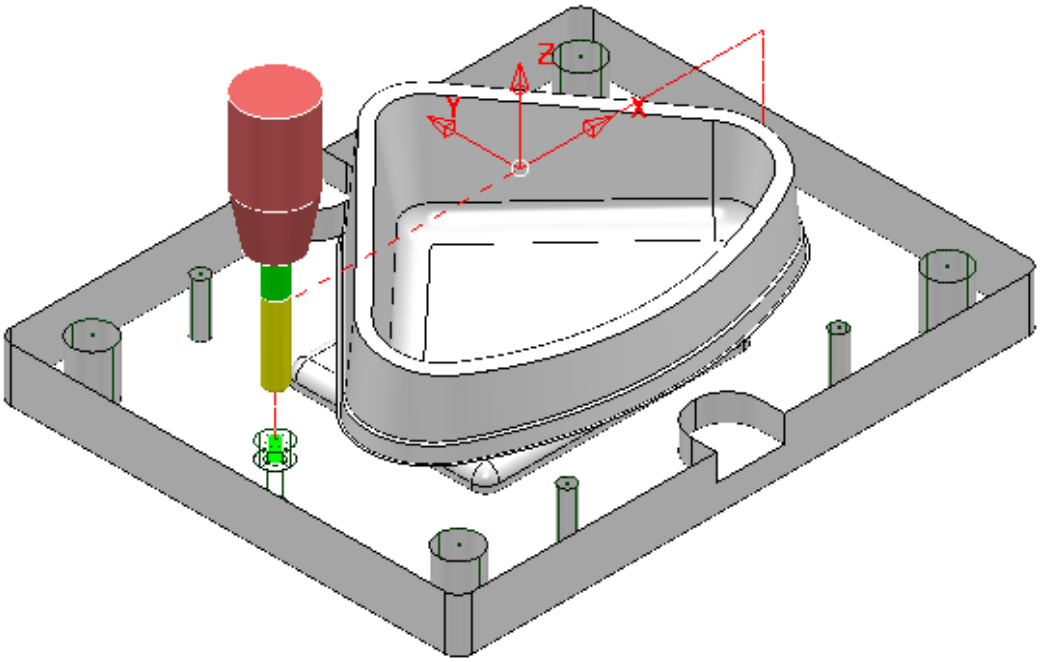

11 Make a **Copy** of the last **Drilling Toolpath** named **OP2-EM16-CBores** and this time use the ***Tool*** **EM16** and ***Cycle Type*** - **Profile** on both of the counterbore **Features**.

 Copyright © Delcam Ltd

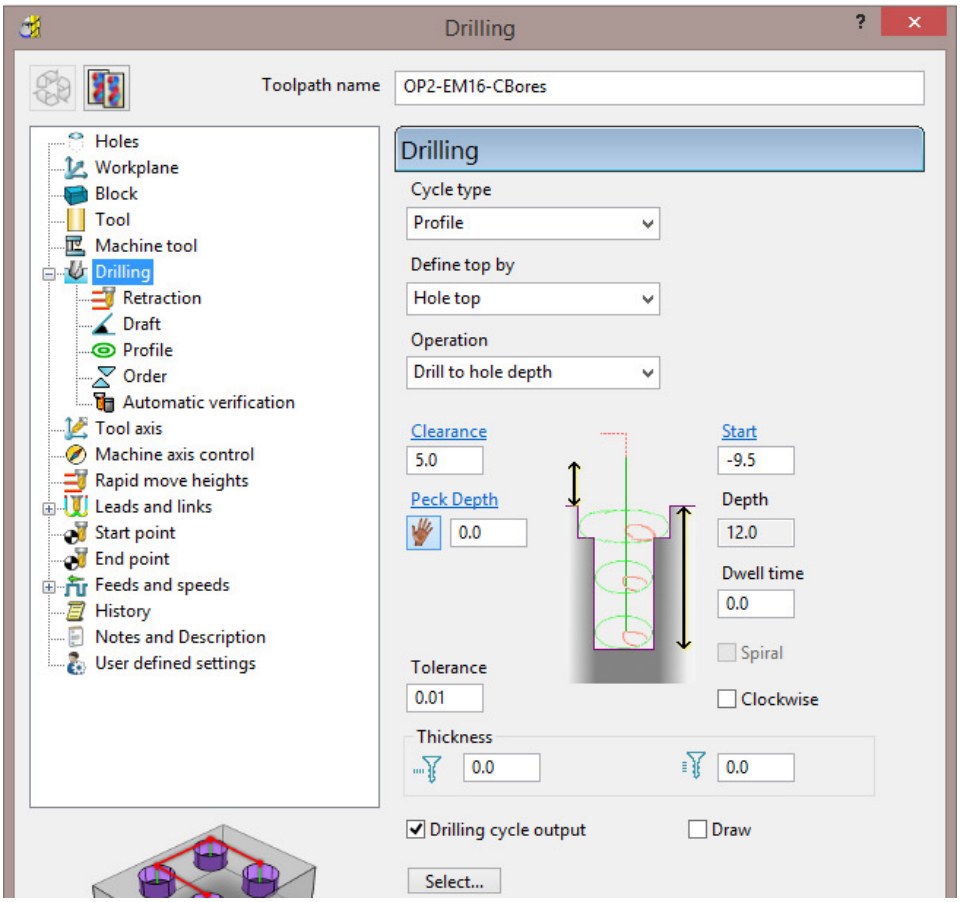

12 Input data into the **Drilling** dialog exactly as shown above and **Calculate**.

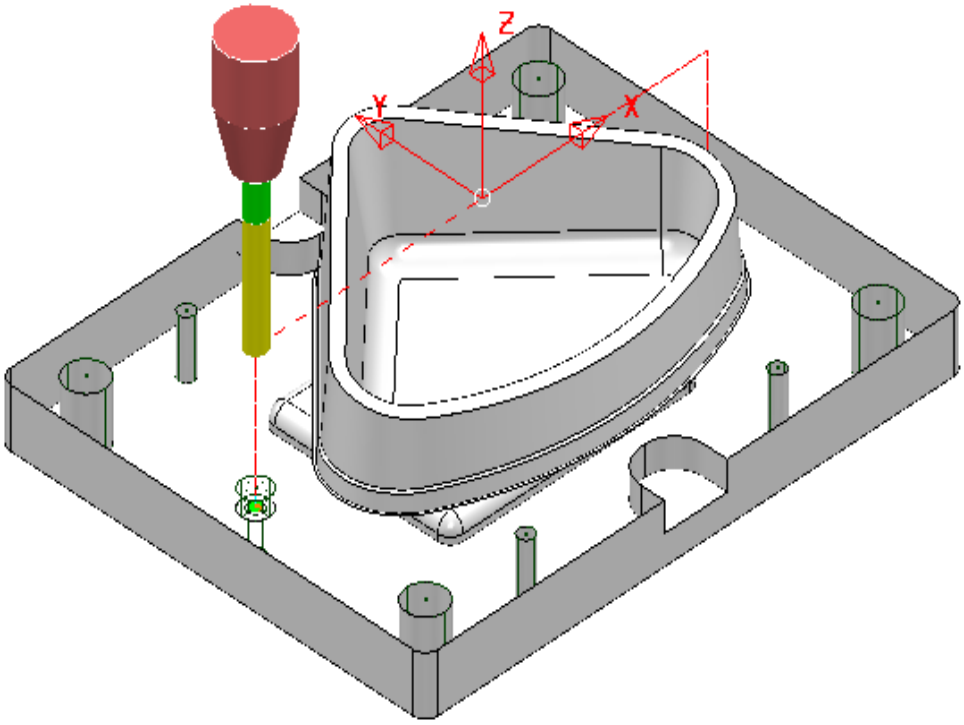

13 Perform **ViewMILL** simulations for both **OP1** and **OP2**.

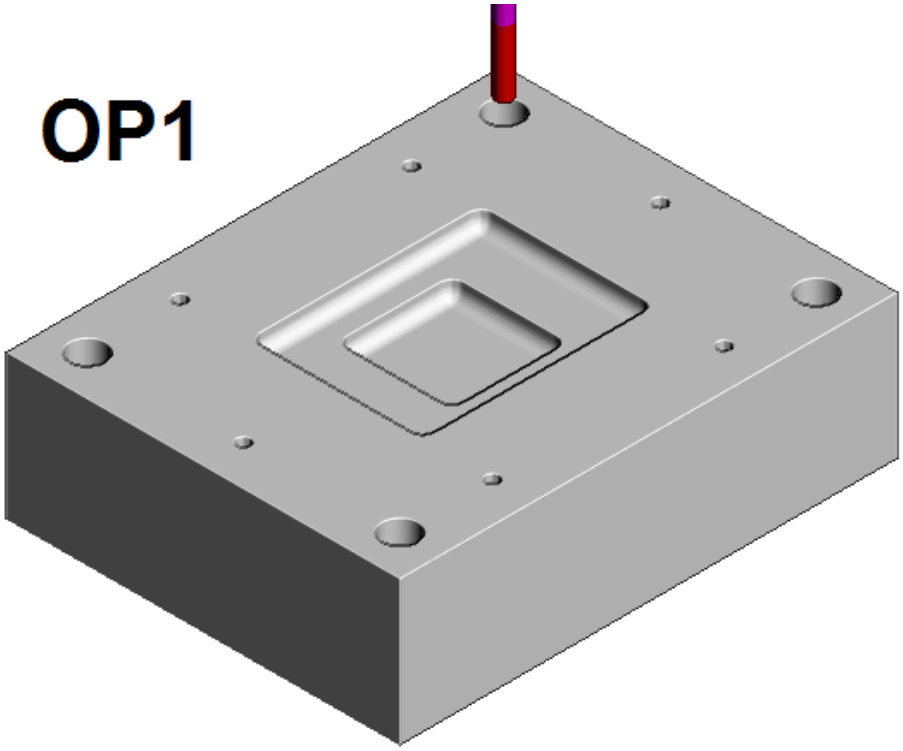

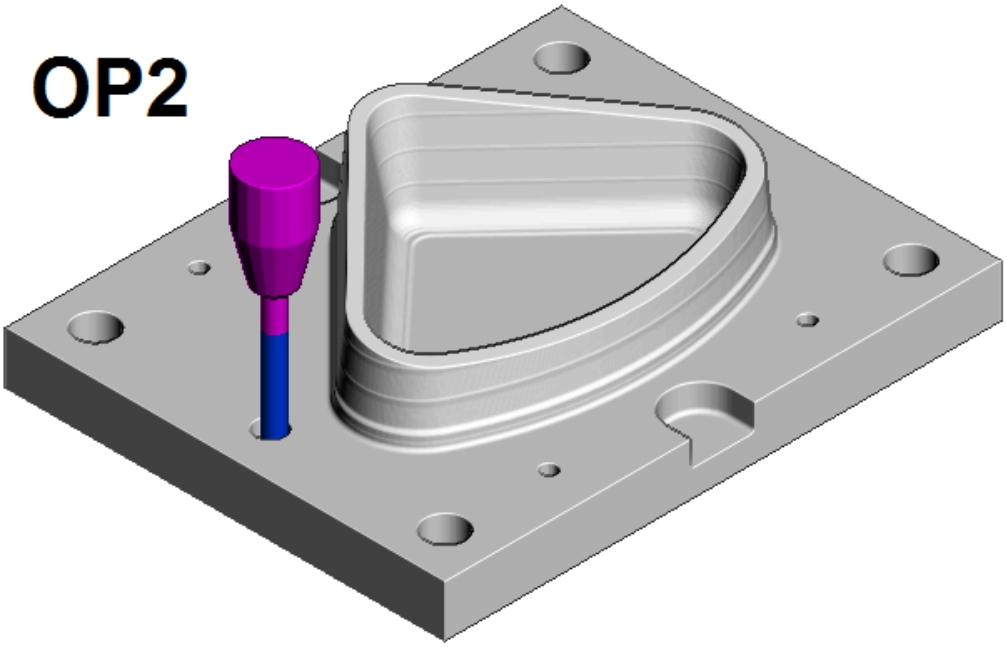

14 **Save** the **Project** to update:-

….\COURSEWORK\PowerMILL_Projects\CornerBowl-Example

 Copyright © Delcam Ltd

2.5D Machining Example

1 Select **File** > **Delete All** and **Tools** > **Reset Forms**

2 **Open** the (read only) **Project**:-

….\PowerMILL_Data\Projects\ 2DCurveMachining-2-Start

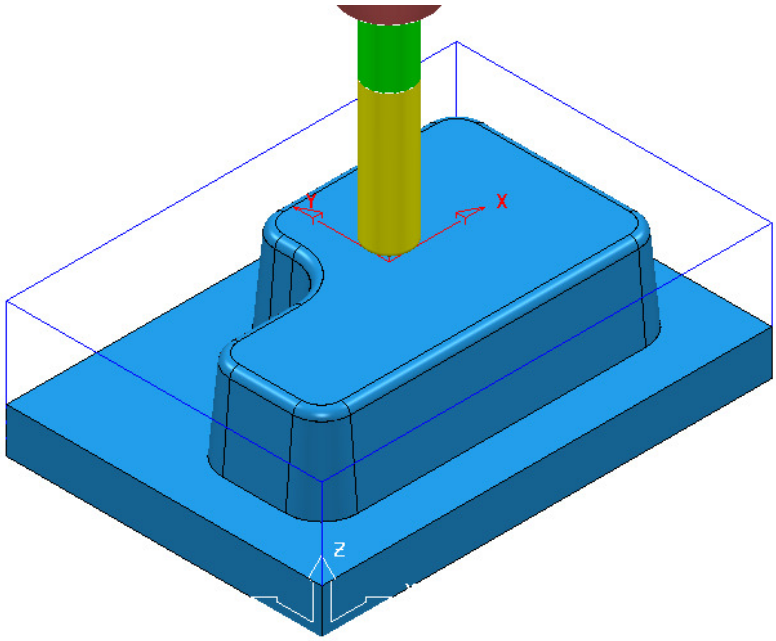

3 **Save Project As**:

….\COURSEWORK\PowerMILL_Projects\2DCurveMachining-2

The **Project** already includes **Toolpaths** to rough and finish machine the 3D model form. It is however required to create additional recesses into the top face (7.5 deep with 10 Deg Draft) and front wall (25 deep – No draft) and 4 Dia 12 holes near the corners of the base (offset 15 from the outside of the base).

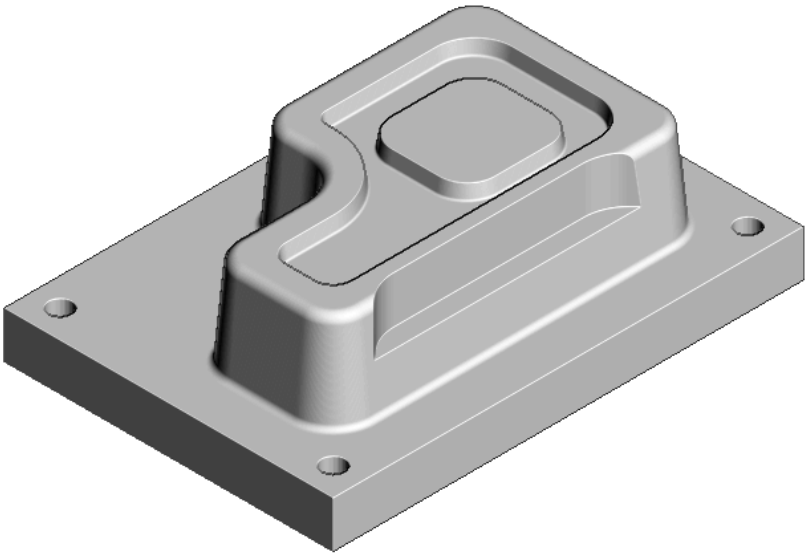

Create individual Patterns for the Top Recess, Front Recess, and Base Corner Holes:-

The **Model** also includes ***2D curves*** which can be made visible by switching on ***Wireframe*** in the **Views** toolbar.

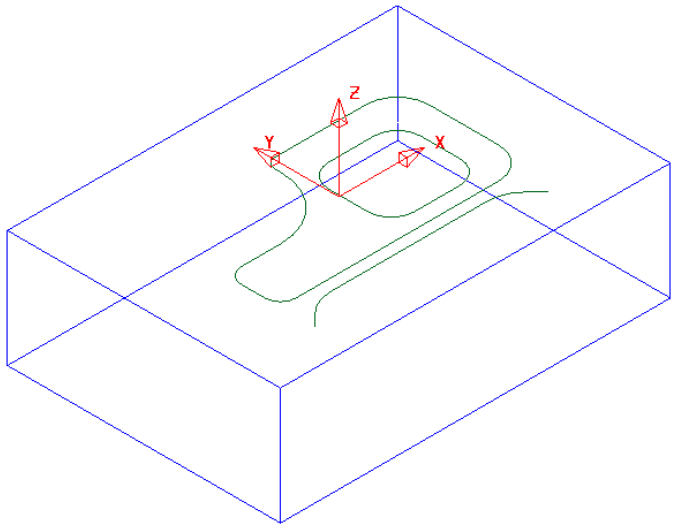

4 Create a new **Pattern** (1).

5 Select both of the closed ***wireframe curves*** on the **Model**.

6 In the **PowerMILL** ***explorer*** right mouse click on the new **Pattern** and from the local menu select **Insert – Model**.

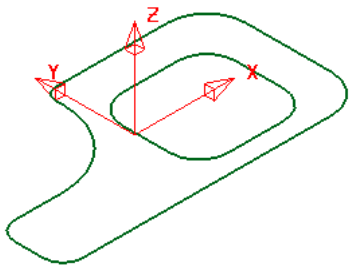

7 Create another new **Pattern** (2) and this time **Insert** the open ***wireframe curve*** into it.

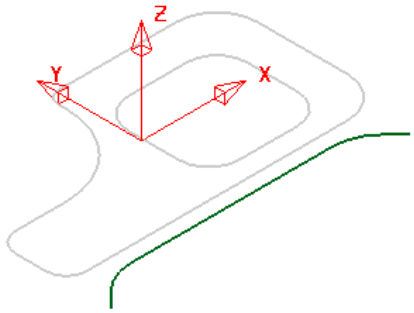

 Copyright © Delcam Ltd

8 Create another new **Pattern** (3).

9 Select the upper base surface on the **Shaded** model and **Insert** it into the new **Pattern**.

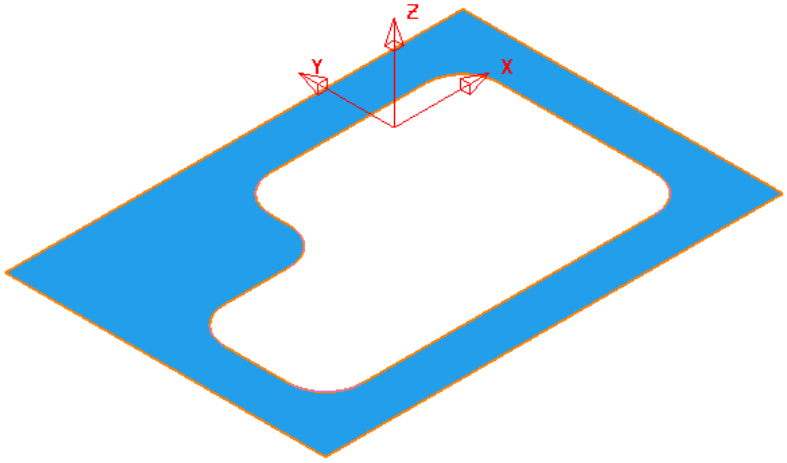

10 Select and **Delete** the inner **Pattern** ***segment***.

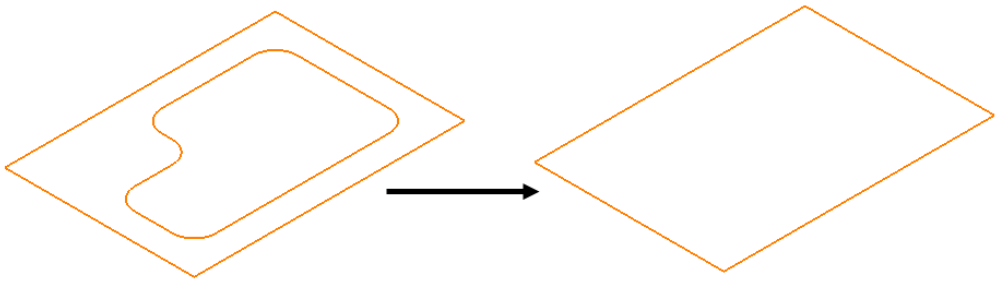

11 Double left mouse click on the remaining **Pattern** segment in the graphics area to access the **Curve Editing** toolbar.

12 **Offset** the ***selected segment*** inwards by **15**.

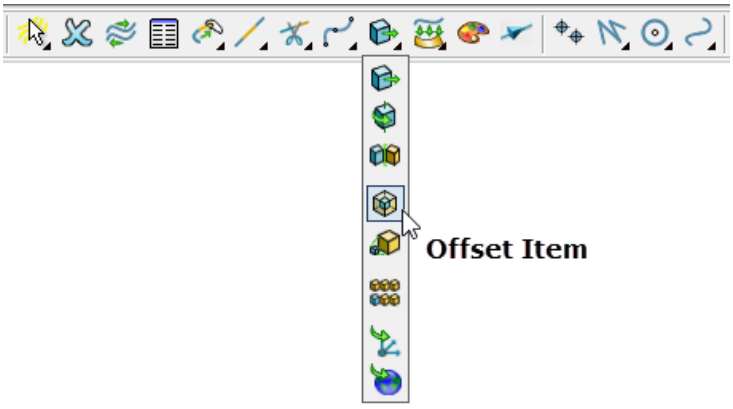

13 To accept the edits, select the ***green tick*** at the end on the **Curve Editor** toolbar.

Machine the top recess with a 10 degree draft angle:-

14 **Activate** one of the existing toolpaths to reinstate the settings (Workplane, Block, and Rapid Move Heights).

15 **Activate** the **D12TR1** tool.

16 From **Toolpath strategies** open the **2D Curve Area Clearance** dialog.

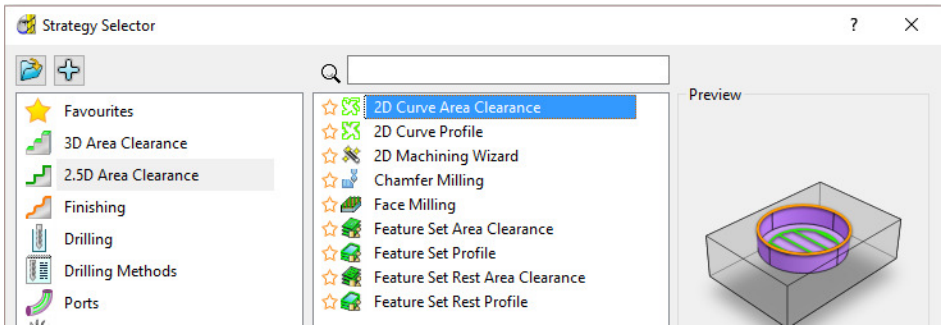

17 Input the data and settings exactly as shown in the following images.

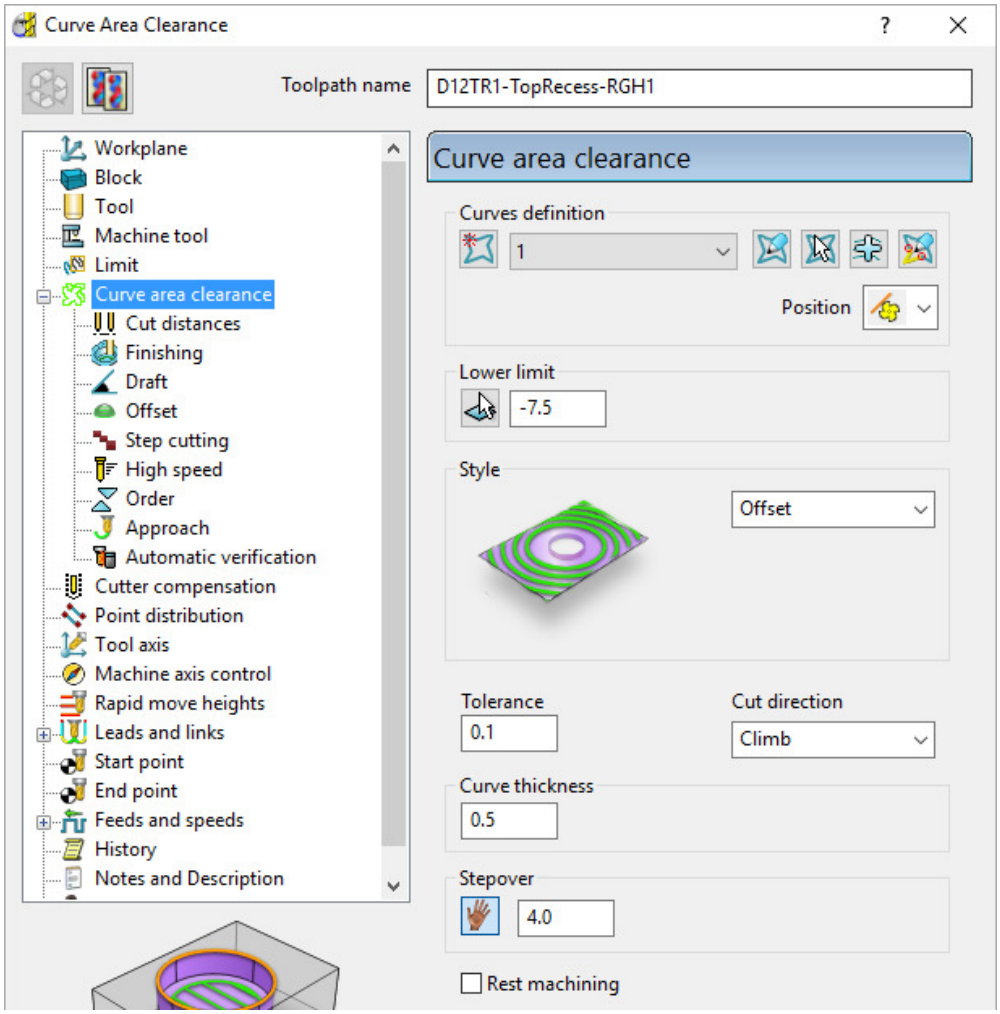

18 Select to preview and if required apply the ***Pattern Decoration*** options to modify the machining area and directions.

 Copyright © Delcam Ltd

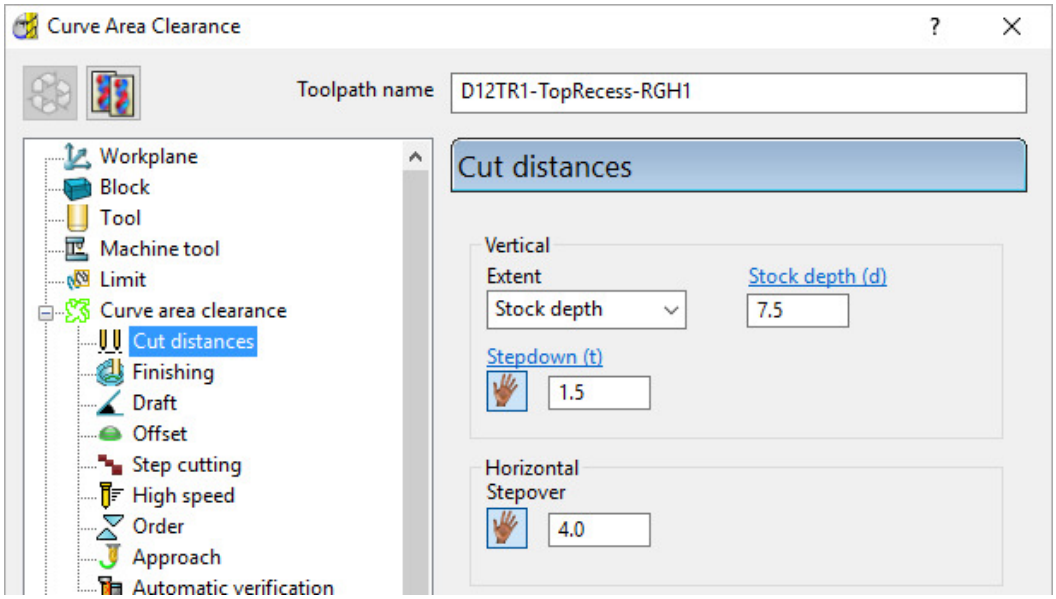

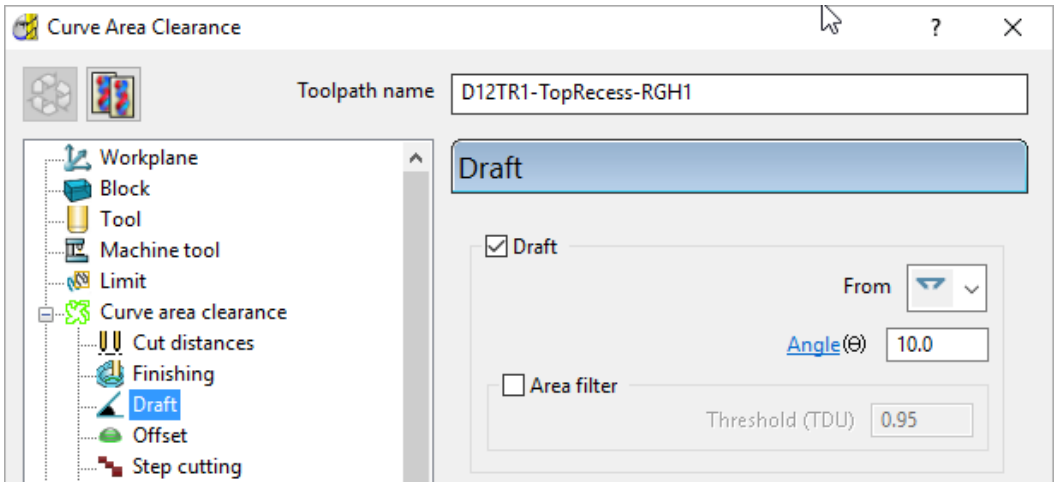

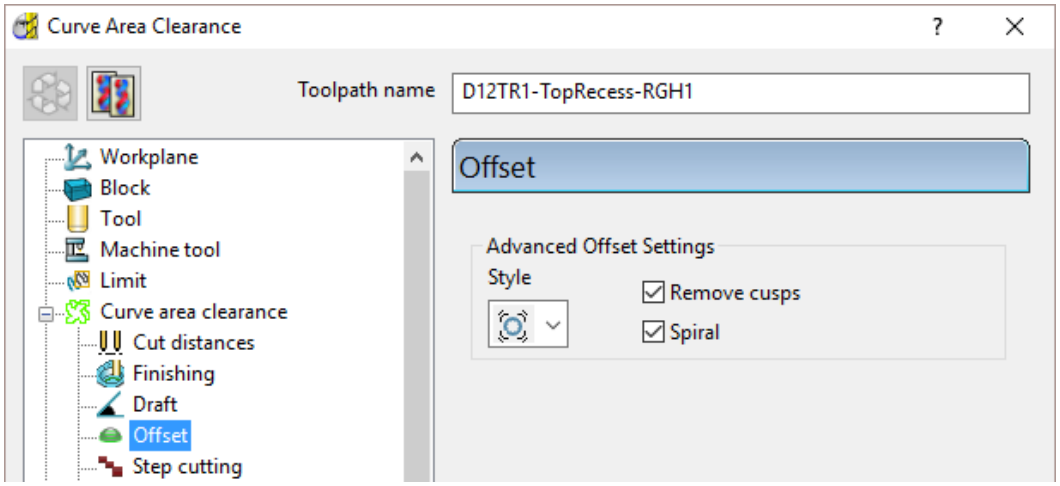

19 Select **Calculate** to process the toolpath and then **Close** the dialog.

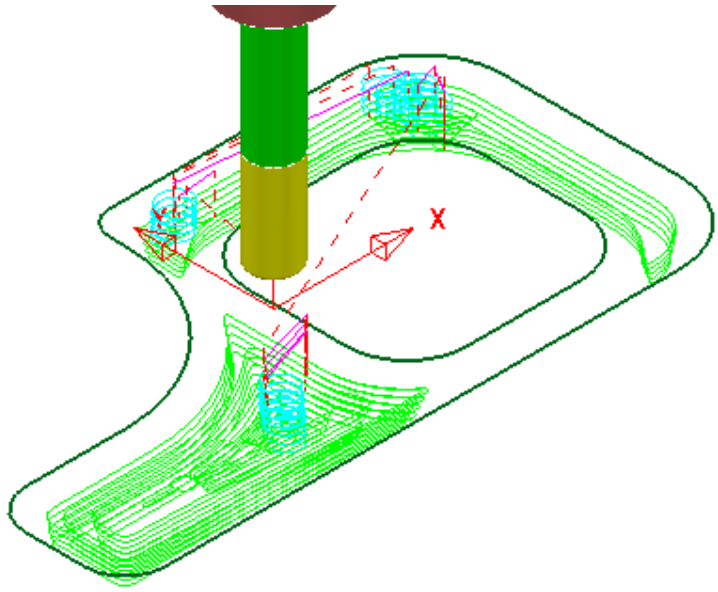

20 **Activate** the **D6TR1** Tool.

21 From **Toolpath strategies** open the **2D Curve Area Clearance** dialog.

22 Input the data and settings exactly as shown in the following images.

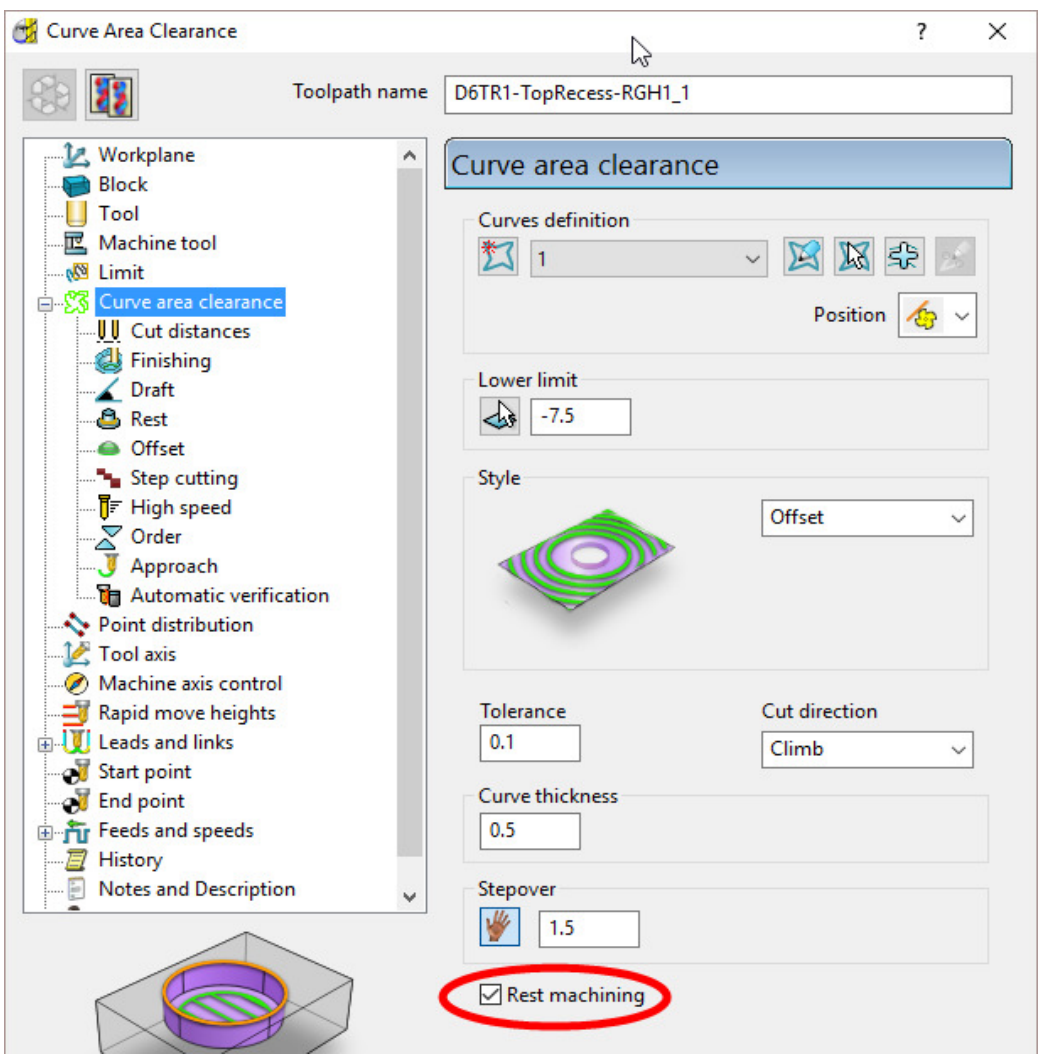

 Copyright © Delcam Ltd

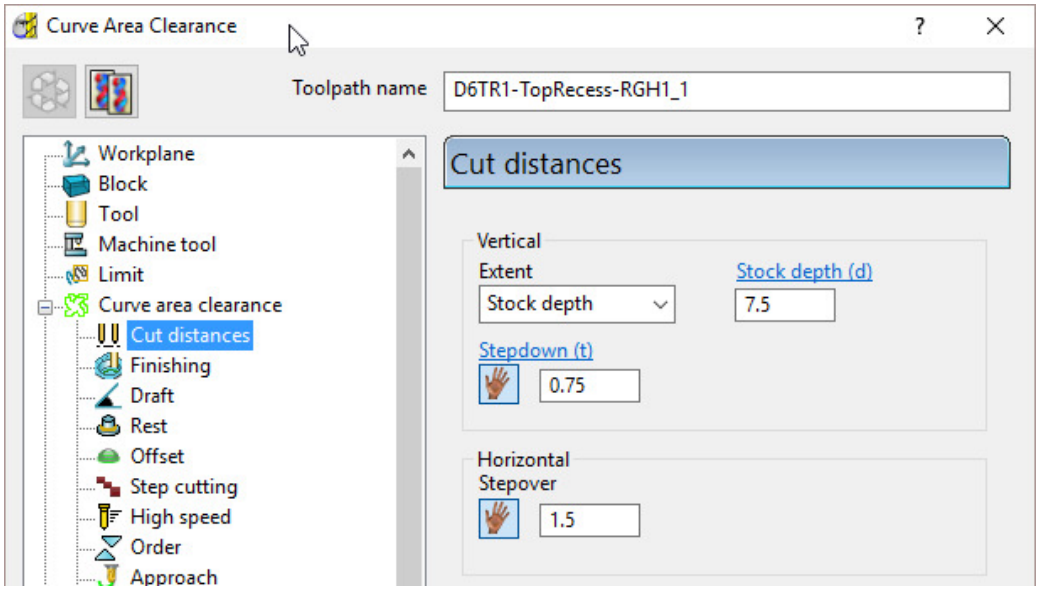

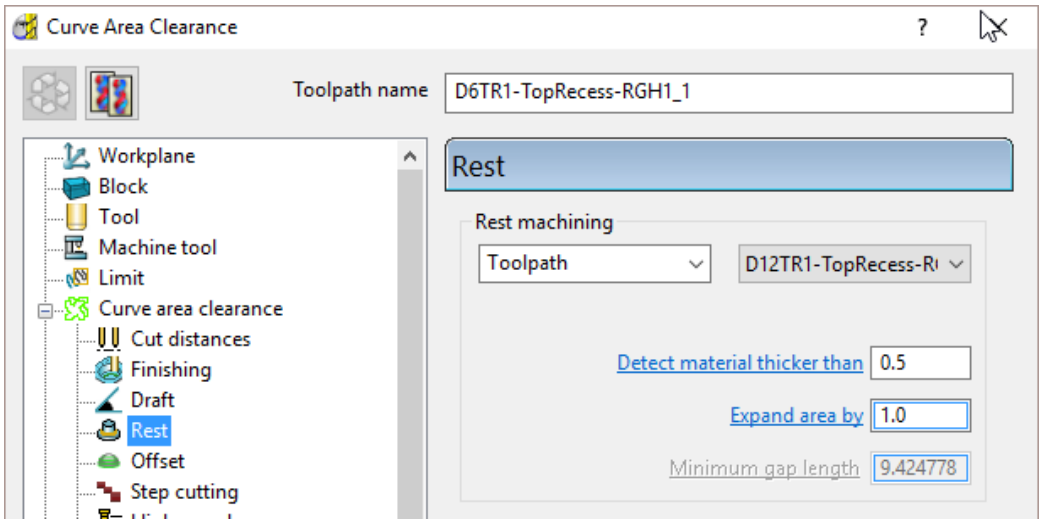

23 Select **Calculate** to process the toolpath and then **Close** the dialog.

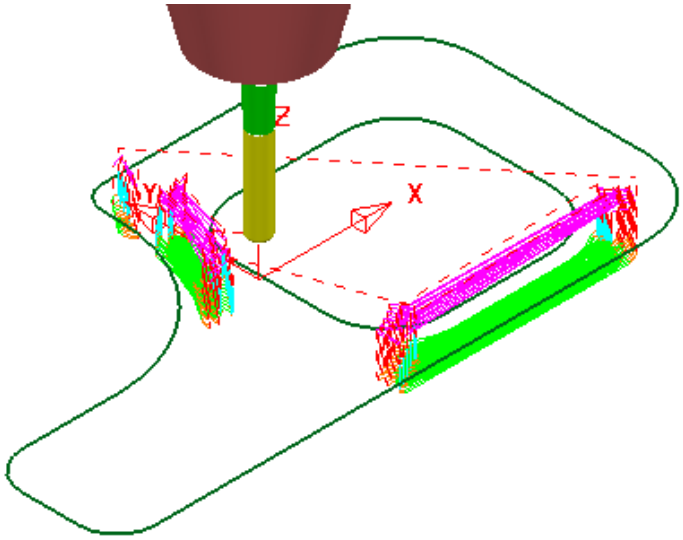

24 From **Toolpath strategies** open the **2D Curve Profile** dialog.

25 Input the data and settings exactly as shown in the following images.

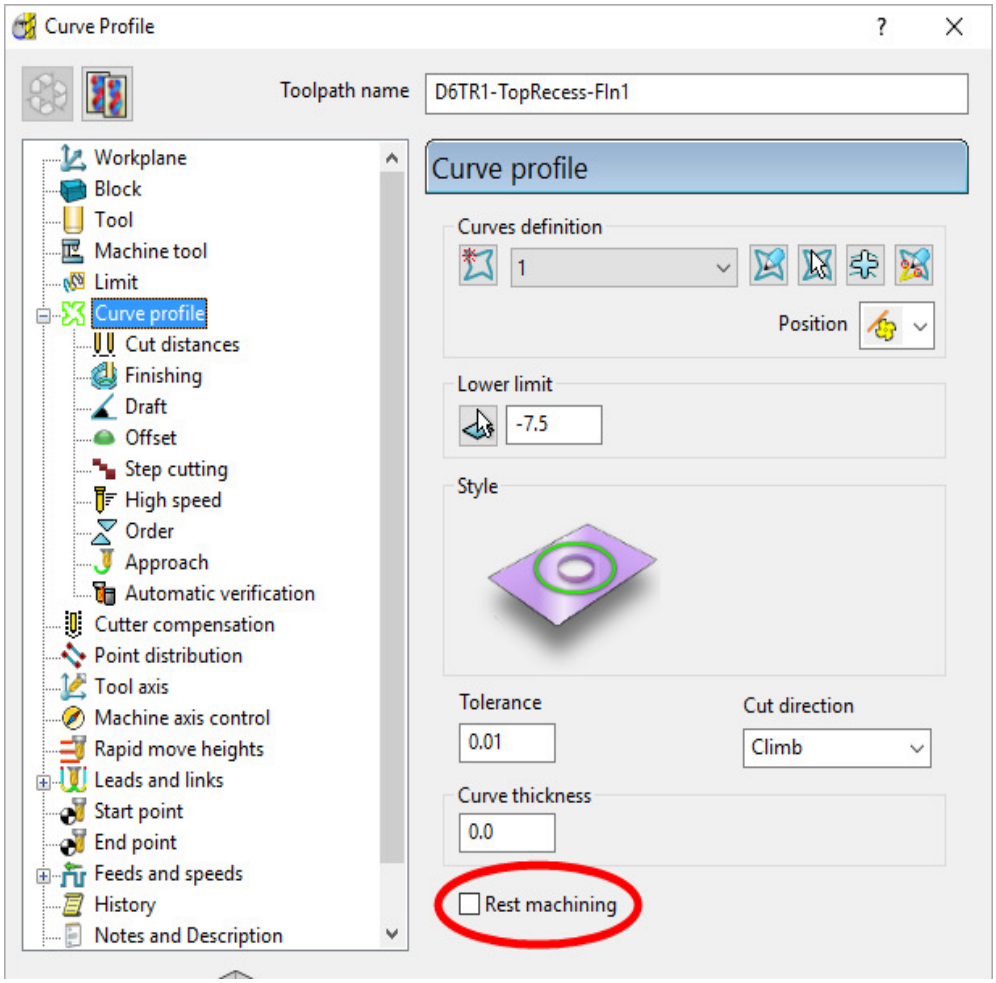

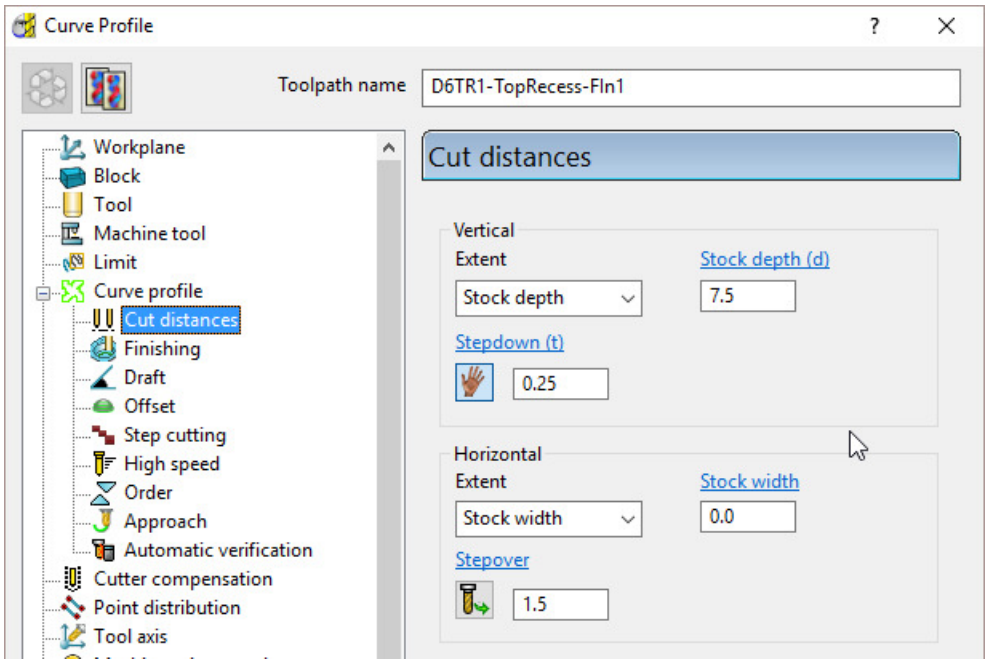

26 Select **Calculate** to process the toolpath and then **Close** the dialog

 Copyright © Delcam Ltd

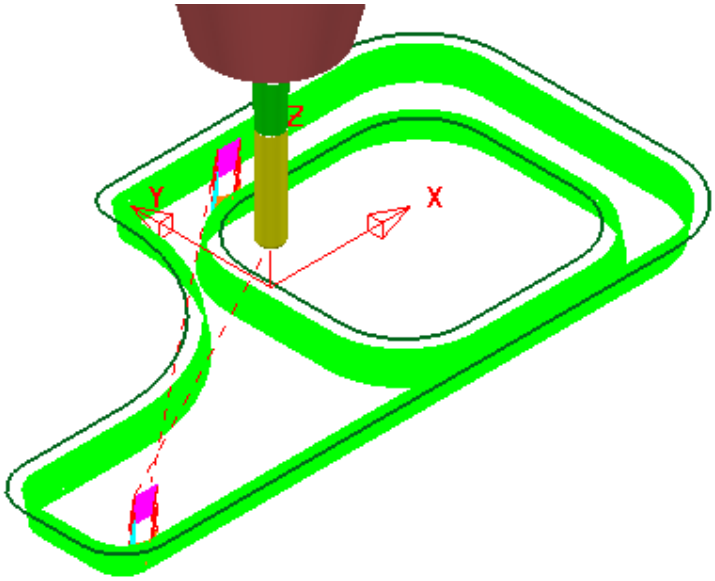

The next stage is to machine the vertical, front recess:-

27 **Activate** the **EM12** Tool.

28 From **Toolpath strategies** open the **2D Curve Profile** dialog.

29 Input the data and settings exactly as shown in the following images.

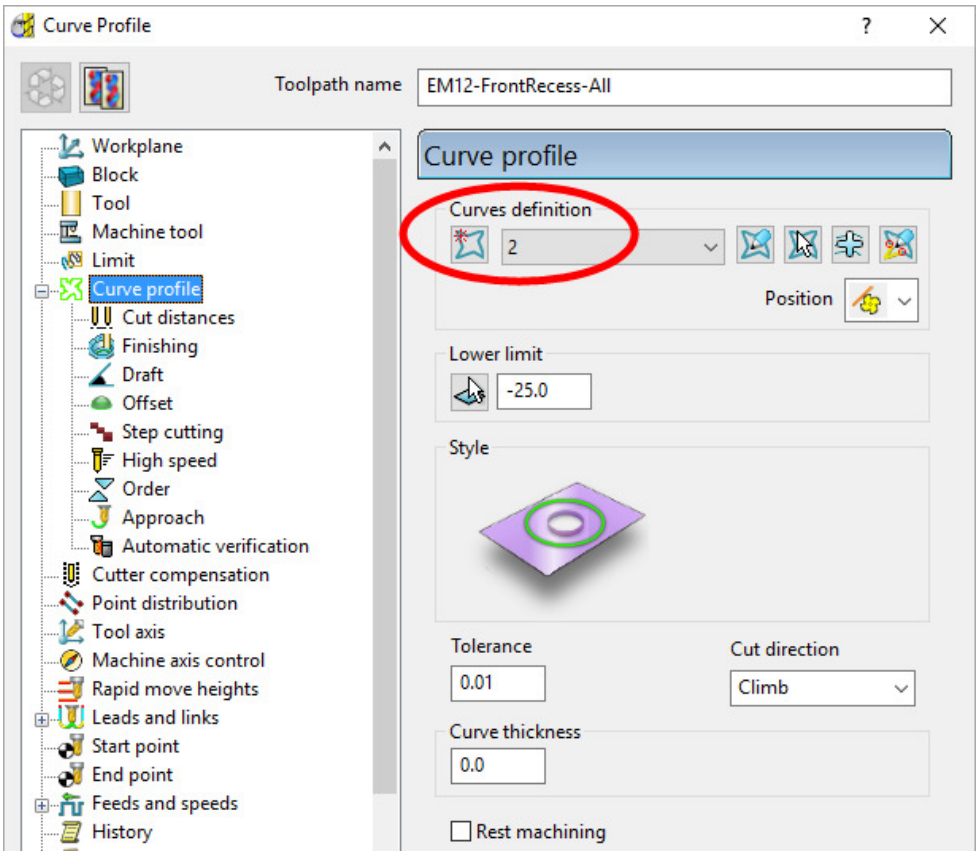

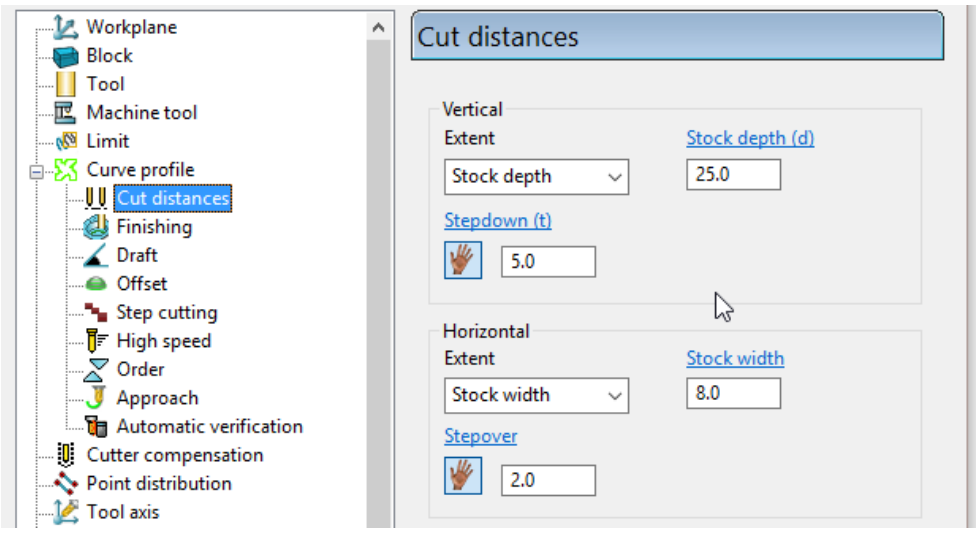

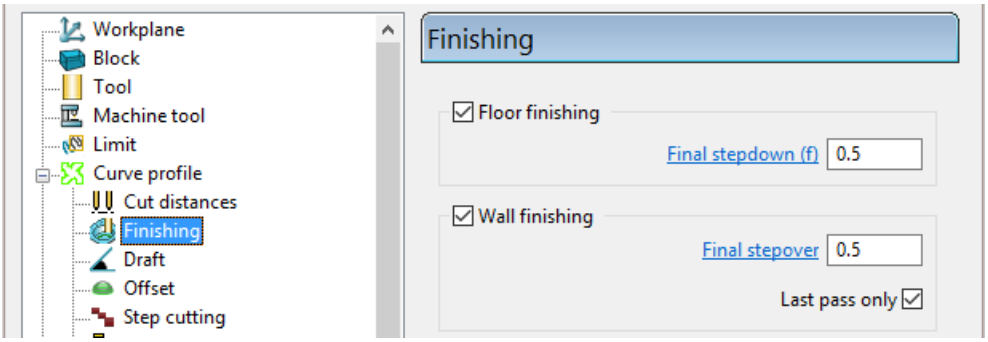

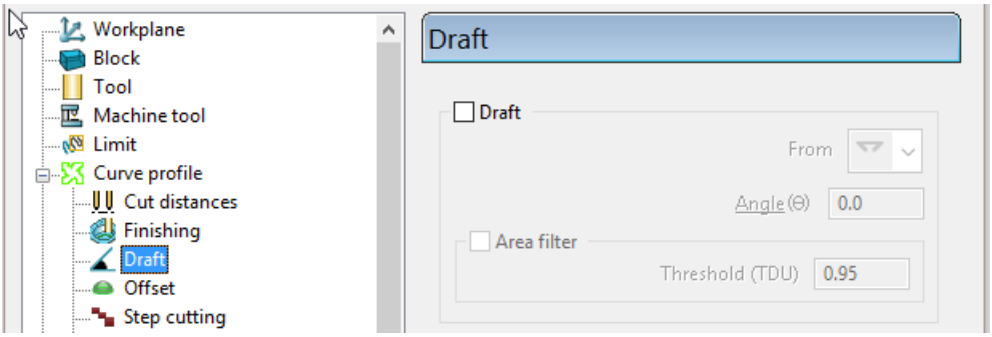

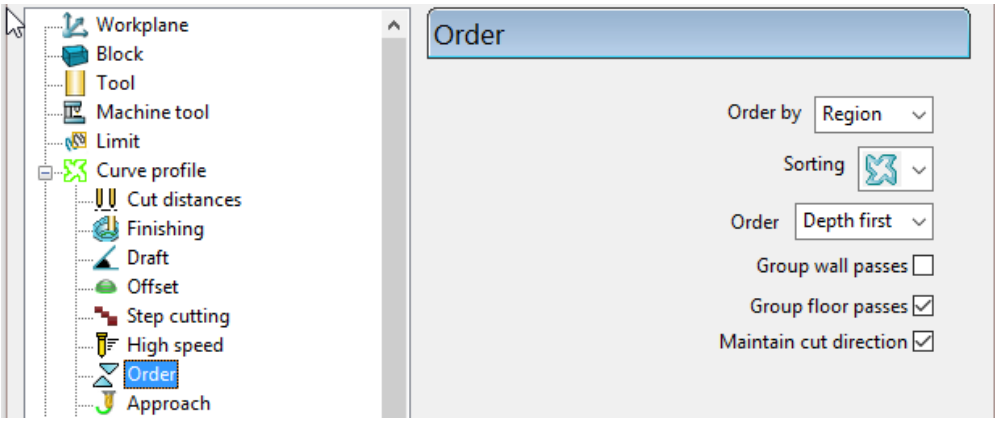

30 Select **Calculate** to process the toolpath and then **Close** the dialog.

 Copyright © Delcam Ltd

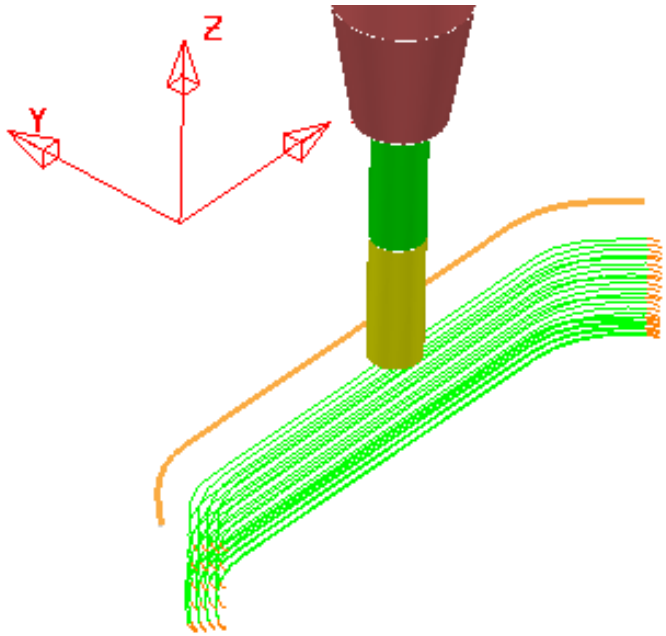

Drill four Dia 12 holes offset 15mm from the base walls:-

The next stage is to create a **Feature Set** defining four Dia 12 through holes down from the corners of **Pattern 3**.

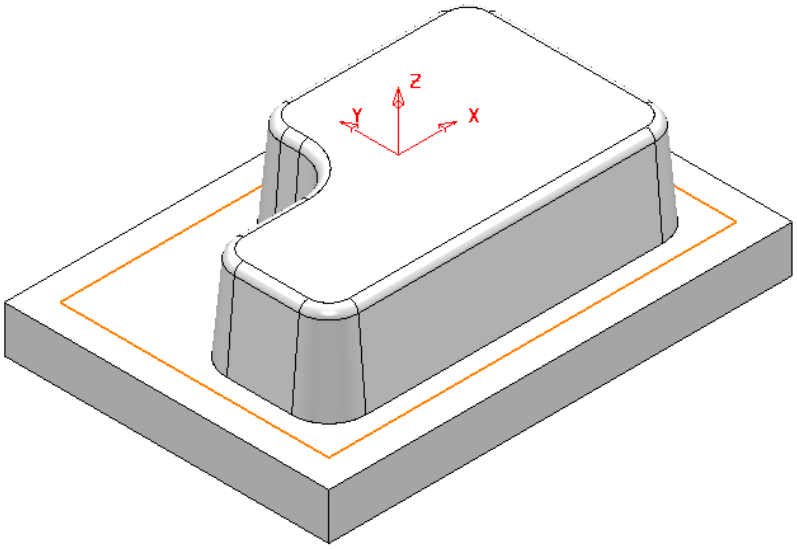

31 Select the rectanglar **Pattern 3** located on top of the base surface.

32 In the **PowerMILL** ***explorer*** right mouse click on **Feature Sets** and from the local menu select **Create Holes**.

33 In the **Create Holes** dialog select the option ***create from*** **Points**.

34 Input the **Absolute** values **-50** (top) and **-75** (bottom).

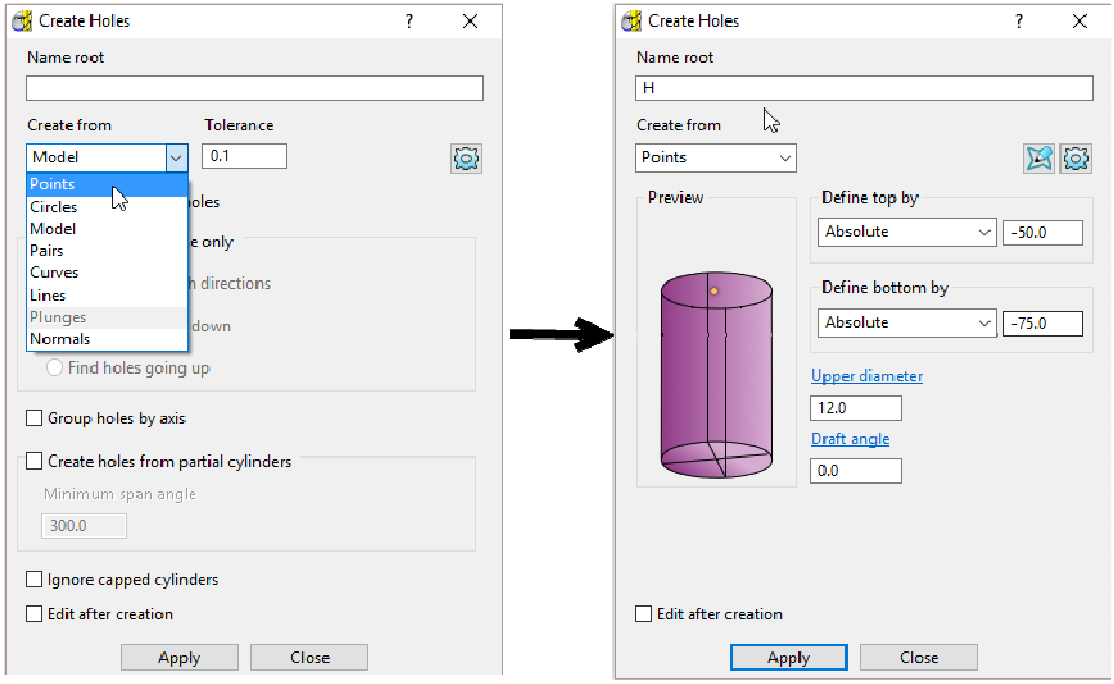

35 Select **Apply** to create four Dia 12 Hole **Features**.

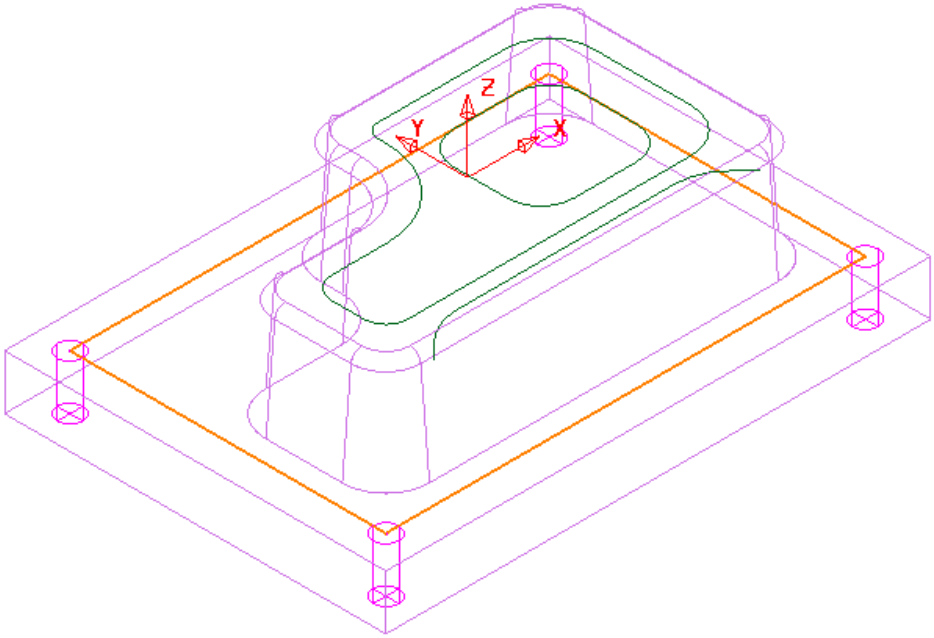

36 **Activate** the **Dia 3 Drill**.

37 From **Toolpath strategies** select the **Drilling – Single Peck** option.

38 Input the data and settings exactly as shown in the following image.

 Copyright © Delcam Ltd

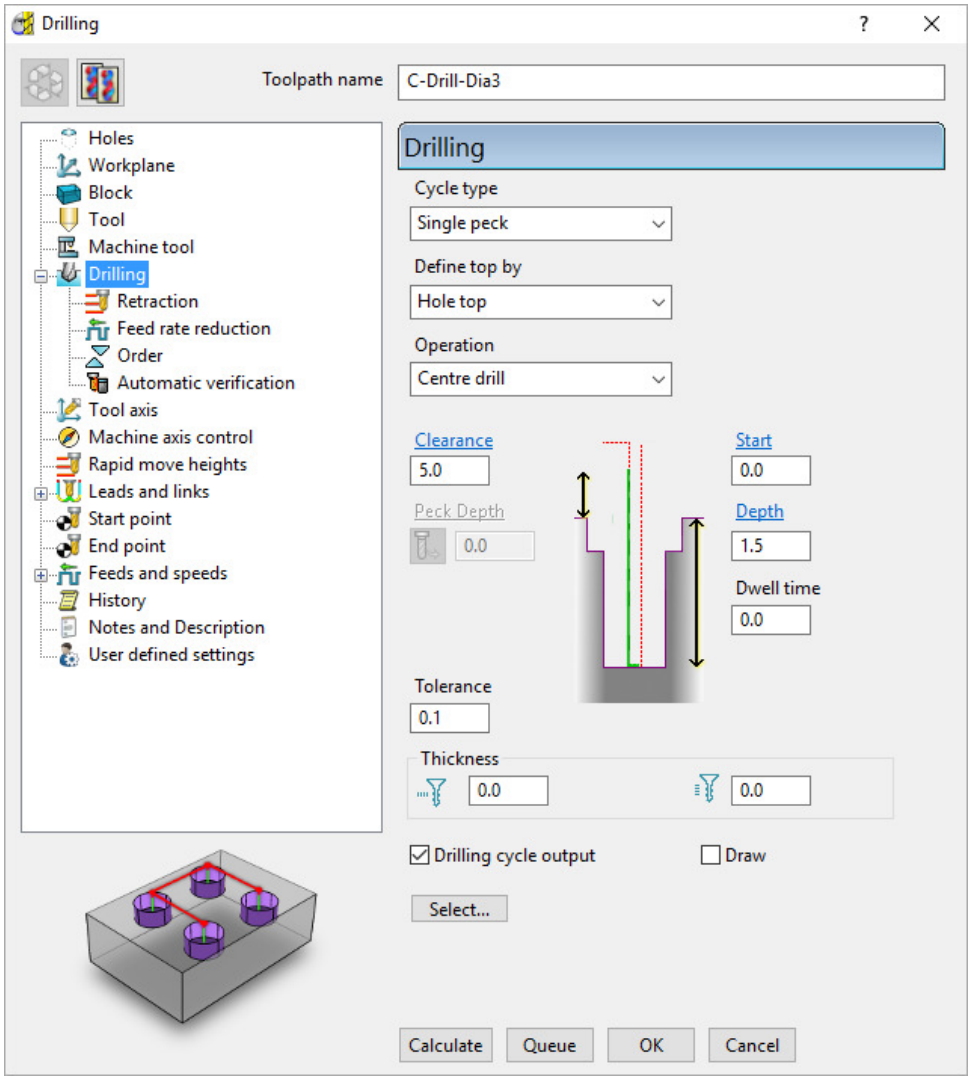

39 **Calculate** the Drilling toolpath and then select **Re-cycle** the strategy.

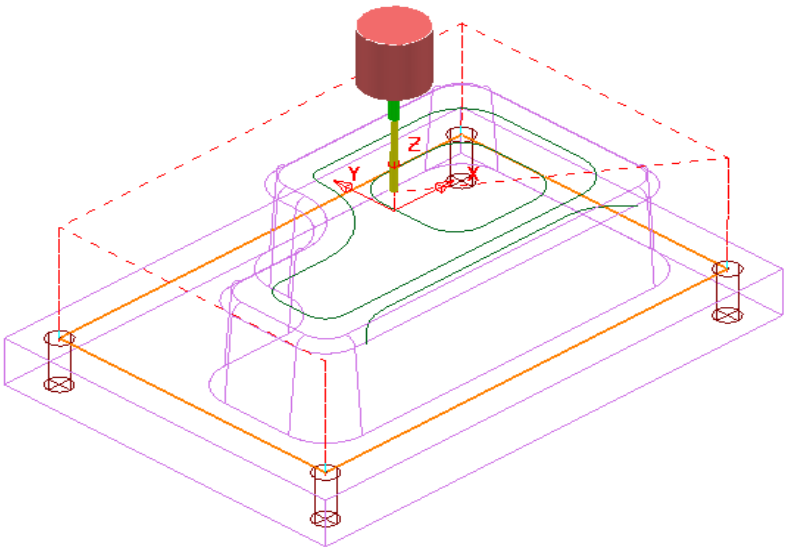

40 **Activate** the **Dia 12 Drill**.

41 Input the data and settings exactly as shown in the following image.

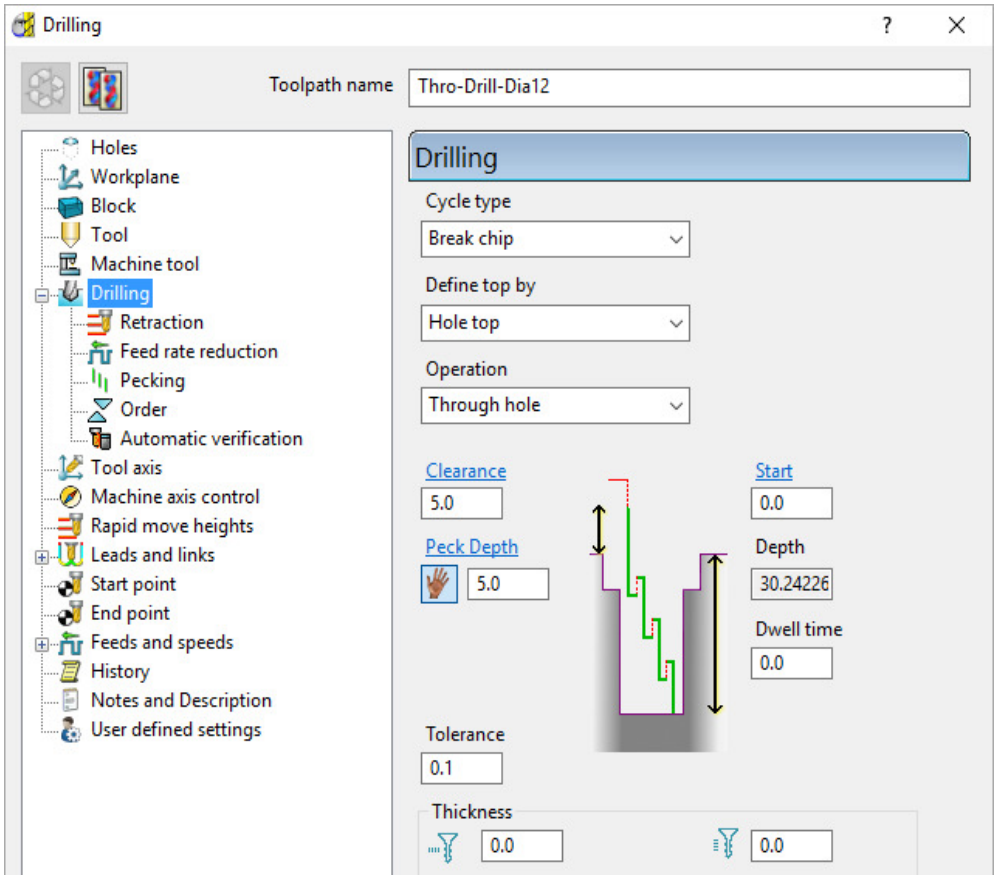

42 **Calculate** the Drilling toolpath and then **Close** the above dialog.

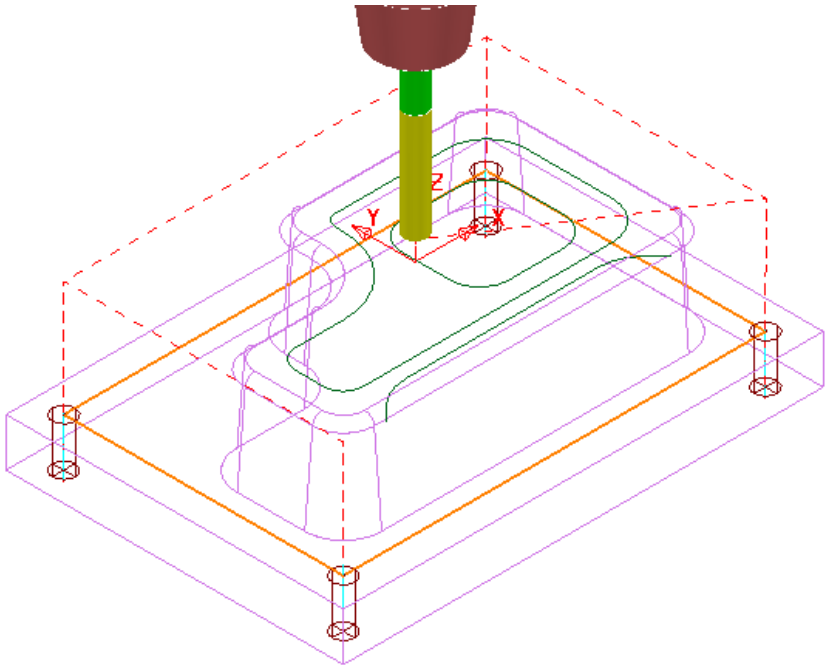

43 **Save the Project** to update:-

….\COURSEWORK\PowerMILL_Projects\2DCurveMachining-2

 Copyright © Delcam Ltd