PowerSHAPE 2016 R1

Tutorials Manual

Electrode creation

Copyright © 1982-2015 Delcam Ltd. All rights reserved.

Delcam Ltd has no control over the use made of the software described in this manual and cannot accept responsibility for any loss or damage howsoever caused as a result of using the software. Users are advised that all the results from the software should be checked by a competent person, in accordance with good quality control procedures.

The functionality and user interface in this manual is subject to change without notice in future revisions of the software.

The software described in this manual is furnished under licence agreement and may be used or copied solely in accordance with the terms of such licence.

Delcam Ltd grants permission for licensed users to print copies of this manual or portions of this manual for personal use only. Schools, colleges and universities that are licensed to use the software may make copies of this manual or portions of this manual for students currently registered for classes where the software is used.

Acknowledgements

This documentation references a number of registered trademarks and these are the property of their respective owners. For example, Microsoft and Windows are either registered trademarks or trademarks of Microsoft Corporation in the United States.

Patent Information

Emboss functionality is subject to patent number GB 2389764 and patent applications US 10/174524 and GB 2410351.

Morphing functionality is subject to patent application GB 2401213.

PowerSHAPE 2016 R1. Published on 13 July 2015

Contents

Electrode creation 2

Creating basic electrodes 2
1. Divide a face 2
2. Create an electrode 8
3. Use solid core from selection to create an electrode 18
4. Edit the electrode solid faces 21
5. Register the solid as an electrode 29
Copying using general edits 32
6. Copy and rotate the electrodes 32
7. Copy and mirror the electrodes 35
Simulating the path of the electrode 40
8. Create and simulate the vector burn 40
9. Simulate the electrode burn motion 45
10. Edit the electrode properties 46
Customising new templates 49
11. Create a new drawing template 49
12. Add text to the template 53
13. Create electrode text substitutions 54
14. Use electrode text substitutions 59
15. Create a border for the text 62
16. Add a view 68
17. Enter additional details in the wizard 71
18. Define custom setup sheets 75
19. Modify the setup sheet 82
20. Tidy up the electrode_template model 85
Adding a frame to an electrode 92
21. Change tools > options to add a frame 92
22. Create an electrode with a frame 96
23. Turn off frames 99
Adding blanks to the wizard 100
24. Add new blanks to the file blank.csv 100
25. Use the new blank 102
26. Add frames to the file blanks.csv 107
27. Use the new frame 109
Exporting and using trode files 115
28. Export a trode file 115
29. Use the electrode extension 118
Summary 122

Electrode creation

Creating basic electrodes

1. Divide a face

If you do not have the licence required for the commands in this tutorial*, go to the next step in the tutorial and click **Import Data (Electrode_1.psmodel)**.

The model will then be provided with the correct data and you will be able to complete the tutorial.

*In most cases selecting an icon will inform you that the necessary licence is missing. In some modules of PowerSHAPE the icon(s) may be missing entirely.

Often faces of a solid need to be split so that the electrode region can be extracted correctly. Splitting the faces of a solid can easily be done with the **Direct modelling** command **Divide face**.

1 Click **Import Data (Electrode_1.psmodel)**.

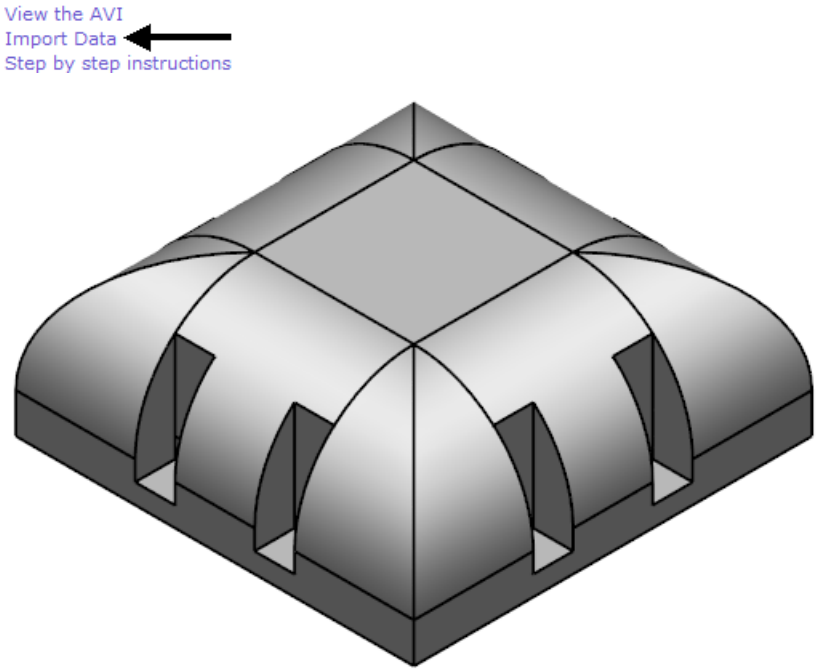

2 Click **Line** .

3 Click **Create a single line** .

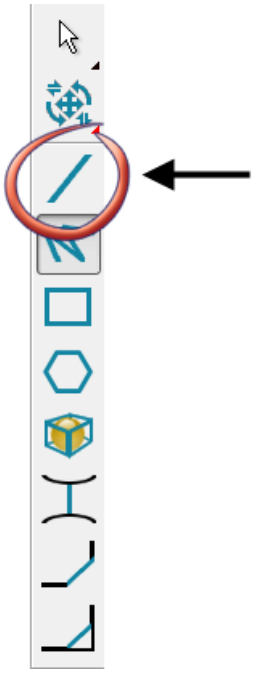

4 Move the the cursor over the solid.

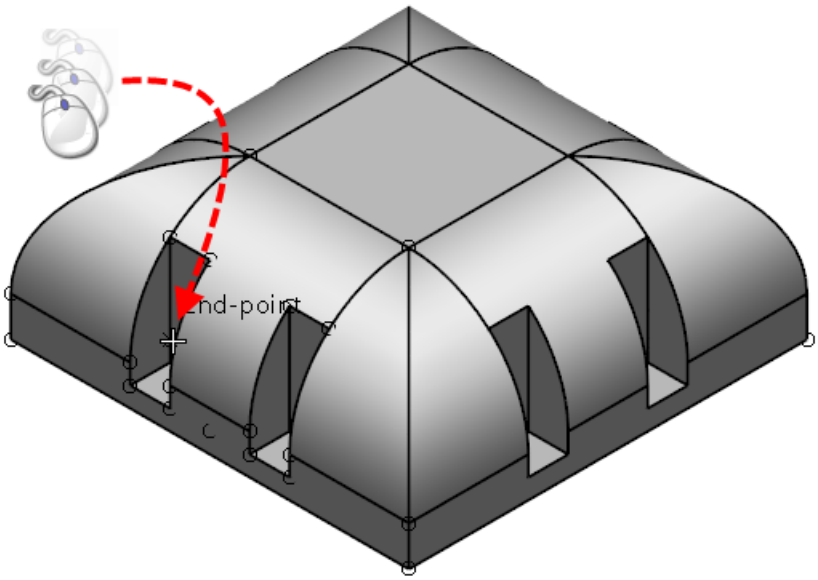

5 When *End-point* displays, click the left mouse button. The start point of the line is created.

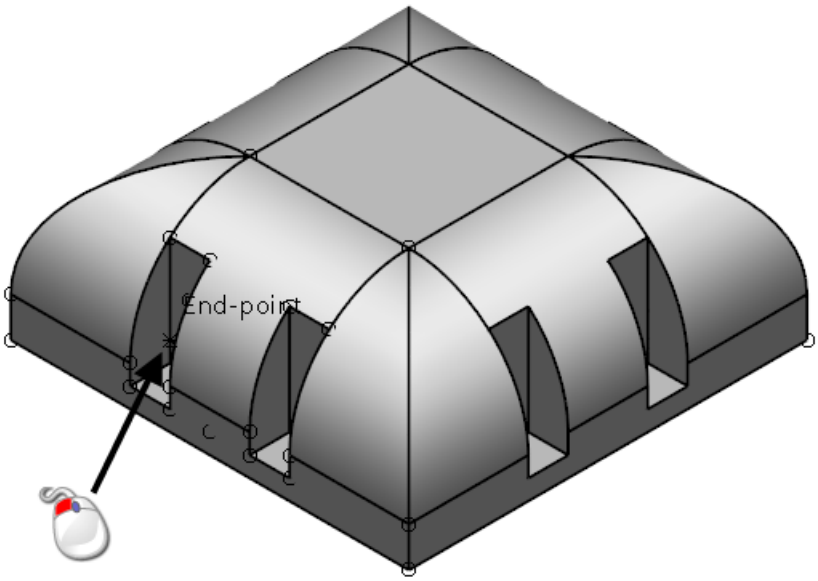

6 Move the cursor along the construction line.

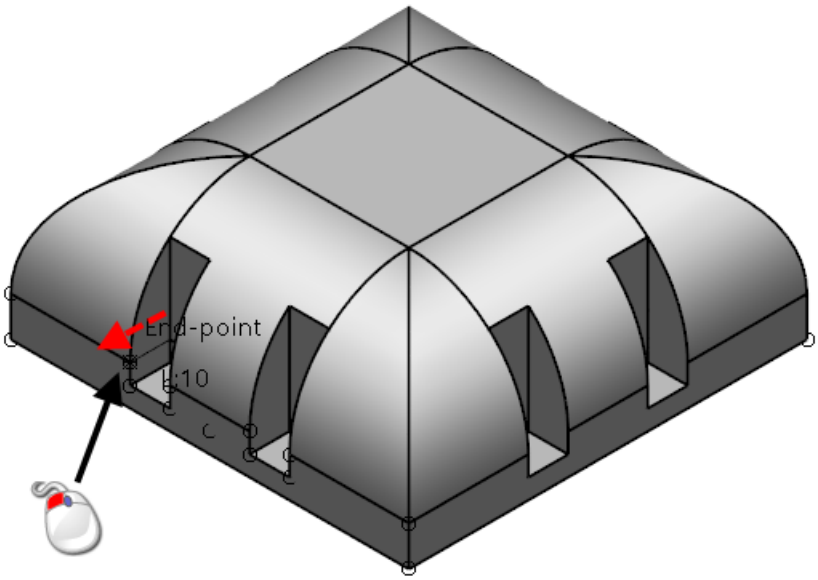

7 When *End-point* displays, click the left mouse button.

The end point of the line is created.

8 Click **Select** .

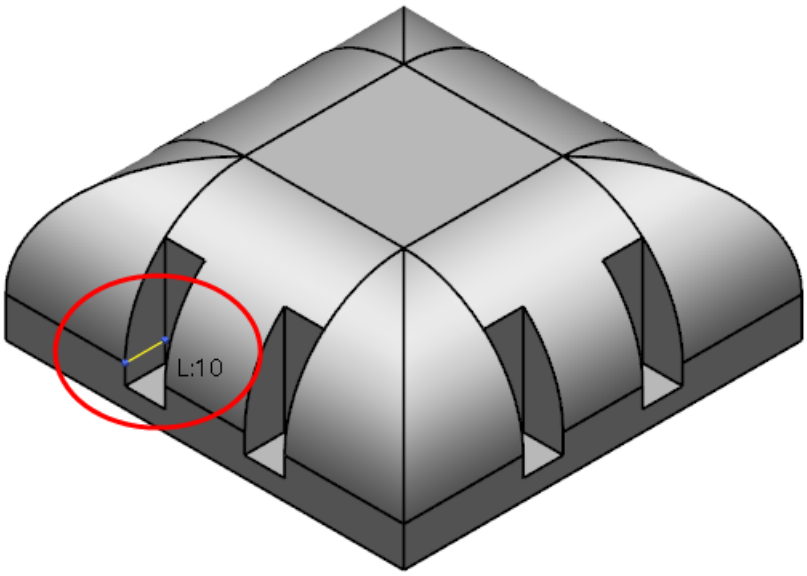

9 Click the solid.

10 Click the face shown below:

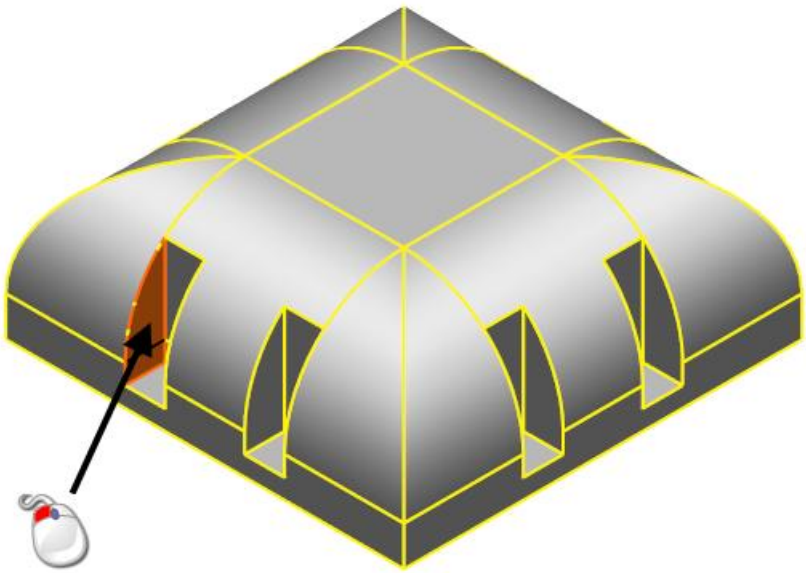

11 Click **Divide faces of a solid using wireframe** .

The Divide faces dialog is displayed.

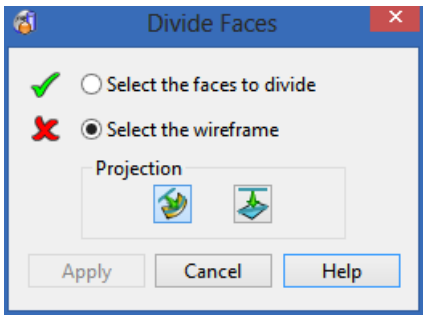

Select the wireframe is active ready for the wireframe used to divide the face to be selected.

12 Click the line shown below:

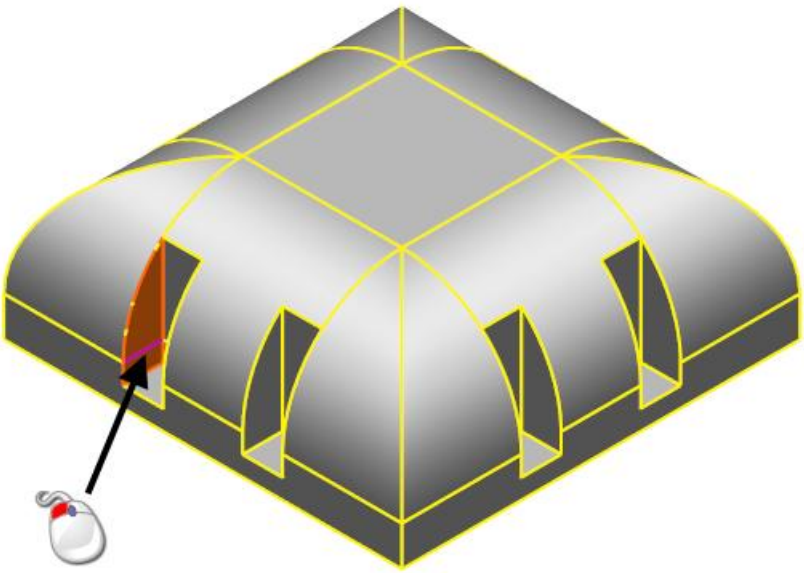

13 Click **Apply**.

14 Click **Cancel.**

15 Click **Quick select all wireframes** .

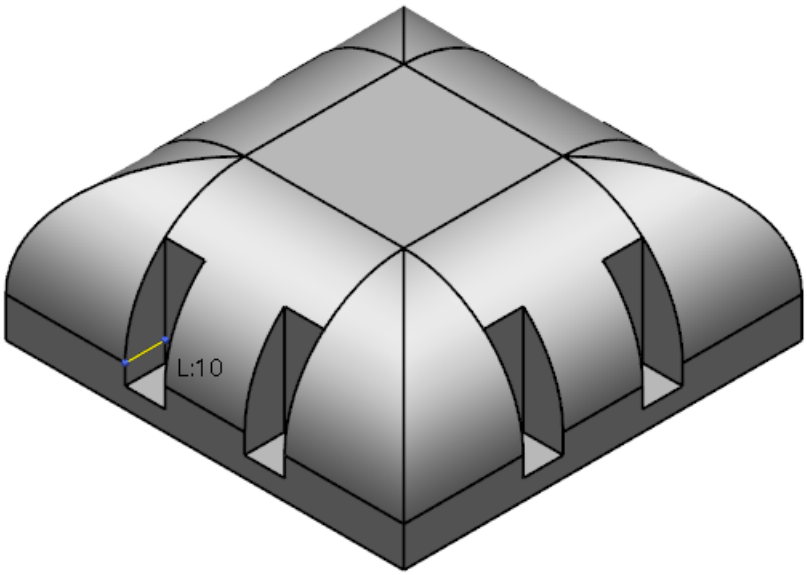

16 Click **Delete** .

17 The face has been divided into two.

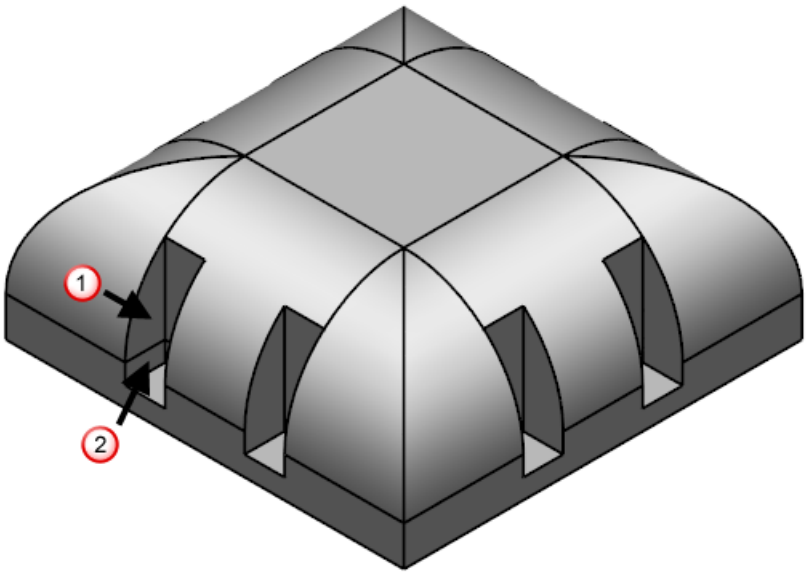

2. Create an electrode

If you do not have the licence required for the commands in this tutorial*, go to the next step in the tutorial and click **Import Data (Electrode_2.psmodel)**.

View the AVI
Import Data
Step by step instructions

The model will then be provided with the correct data and you will be able to complete the tutorial.

*In most cases selecting an icon will inform you that the necessary licence is missing. In some modules of PowerSHAPE the icon(s) may be missing entirely.

1 Click **Module**.

2 Click **Electrode**.

3 Click **Create an electrode** .

The **Electrode Wizard** starts.

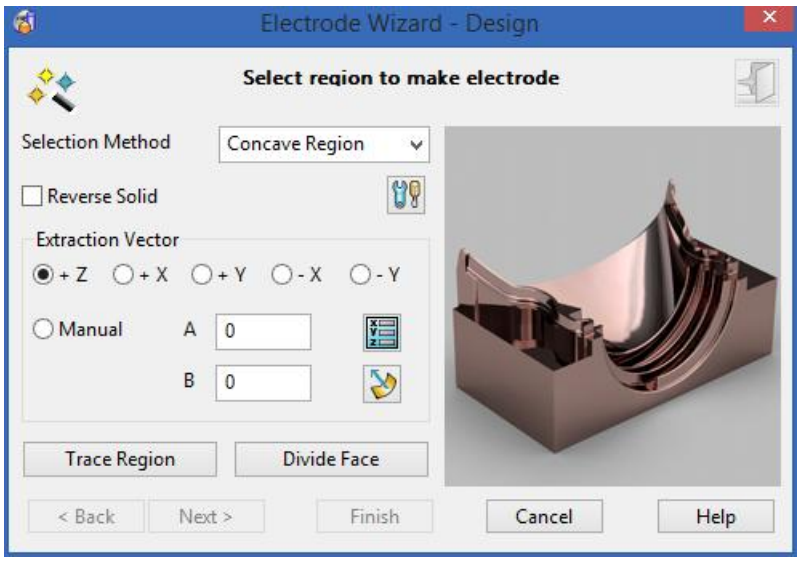

4 Change the **Selection method** to **Single Face**.

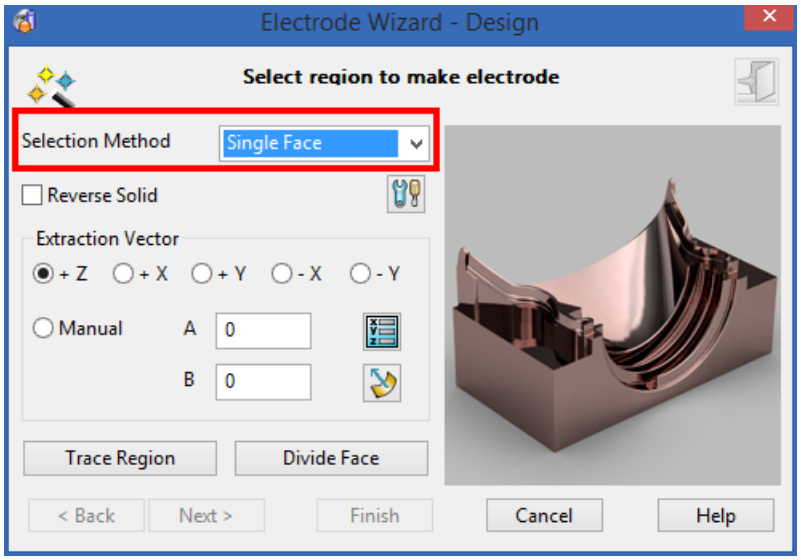

5 Hold down the **Shift** key and click the faces shown below:

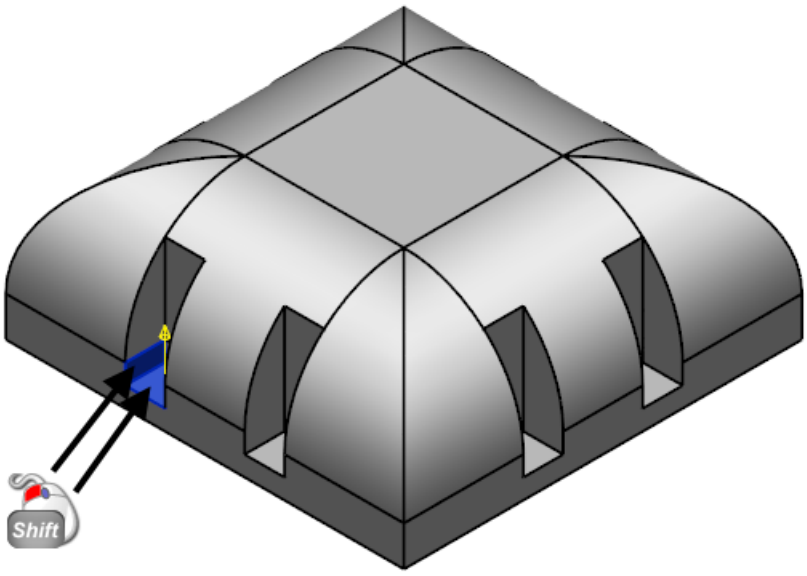

6 Click **Zoom to Box Mode** using the right mouse button.

7 From the flyout, click **Rotate** .

8 Click the left mouse button and drag, to rotate the model to display the view shown below:

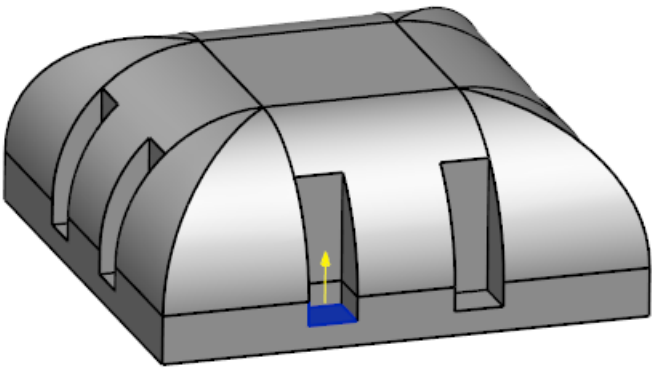

9 Hold down the **Shift** key and click the faces shown below:

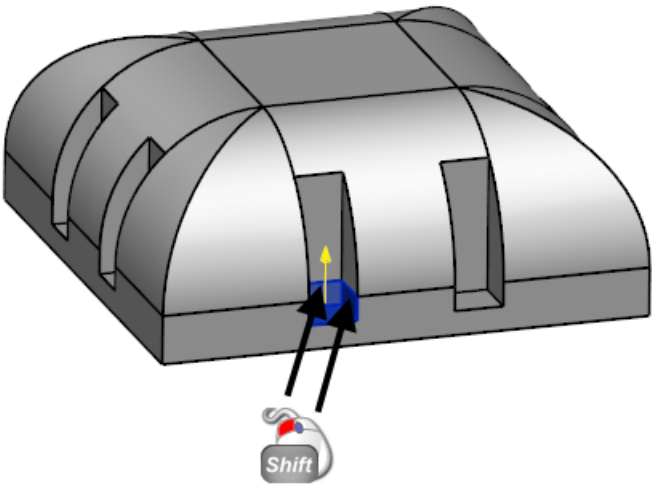

10 Click **View ISO1** .

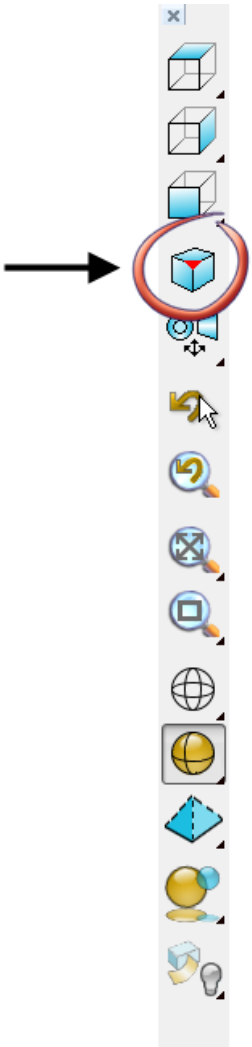

The selected region is displayed in the **Electrode Wizard**.

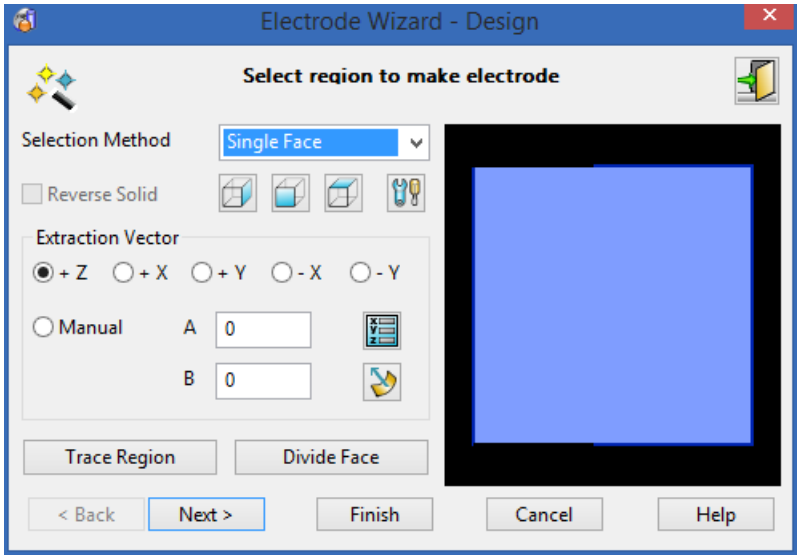

11 Click **Next**.

Use this page to define the extension of the electrode that attaches the burn region to the base.

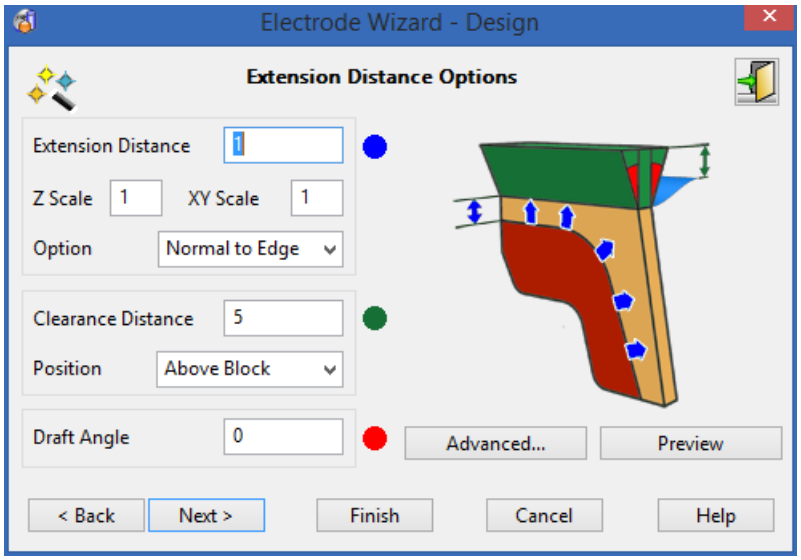

12 Do the following:

1. Change **Extension Distance** to **3**.
2. Change **Option** to **Normal to Edge**.
3. Change **Clearance Distance** to **6**.

④ Change **Position** to **Above Extension**.

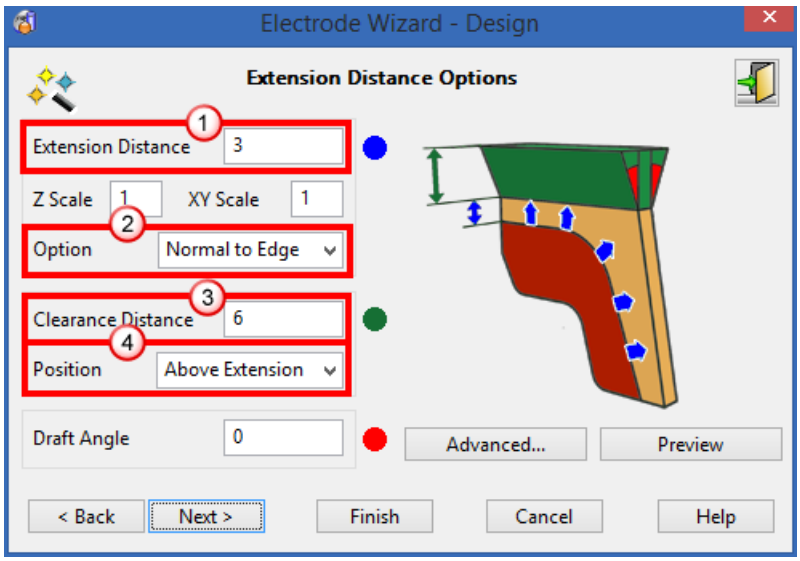

13 Click **Next**.

Use this page to specify the electrode blank. You can create an electrode blank from a catalogue or from a custom blank by selecting the **User Defined** option from the drop down list.

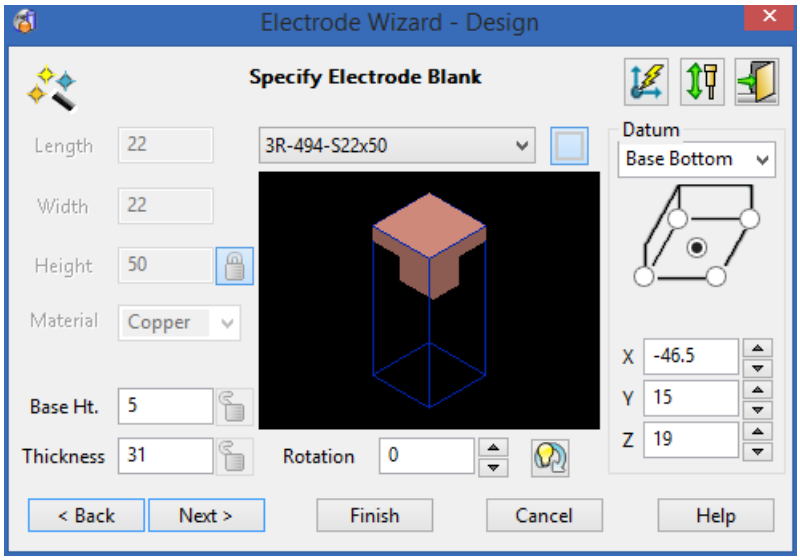

14 Do the following:

① Click **User Defined** from the drop-down list.

② Click **Type of Blank** to display a circle.

③ Enter a **Diameter** of **18**.

④ Click on **Lock Height** to unlock it.

5 Enter a **Height** of **30**.

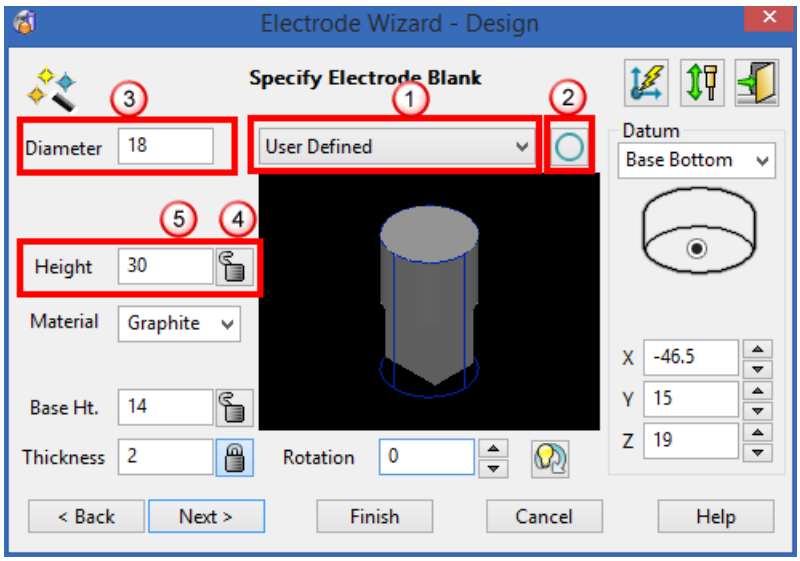

15 Click **Next**.

Use this page to add a holder for the electrode. Select from **Base Holder, Machining Holder or EDM Holder.**

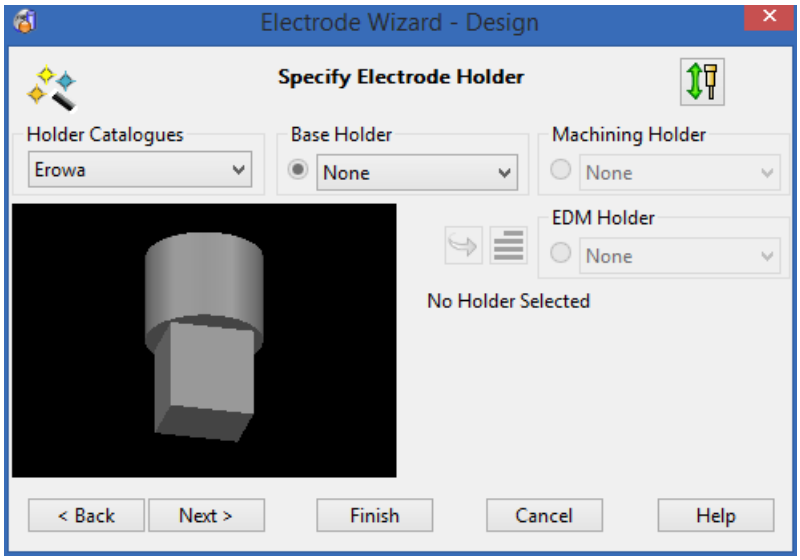

16 Click **Next**.

Use this page to set the following options for the electrode:

- User defined name.
- Specific levels and groups in the model.
- Choose to create drawings of the electrode.
- Define the spark gap to be displayed in the Setup sheet of the drawing along with other data.
- Modify the setup sheets.

17 Click **Generate Setup Sheets**, it is displayed ticked.

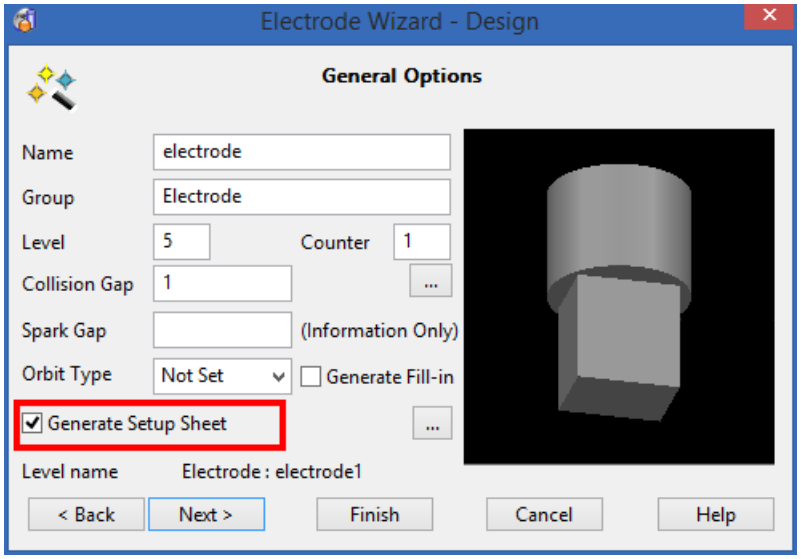

18 Click **Raise setup sheet control form** ...

19 Click **GA Sheet**, it is displayed ticked.

20 Click **One-off modification**, it is displayed unticked.

The changes will be stored in a file in the shareddb directory.

21 Make sure **Detail Setup Sheet** and **Combined Setup Sheet** are ticked.

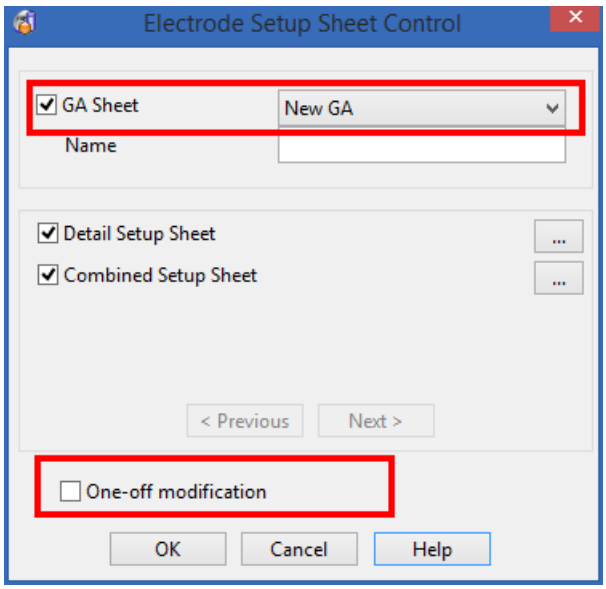

22 Click **OK**.

23 Click **Next**.

A family of electrodes can be defined from one electrode. This family is used to spark the following different stages of the same region:

- Rough

- Semi
- Finish

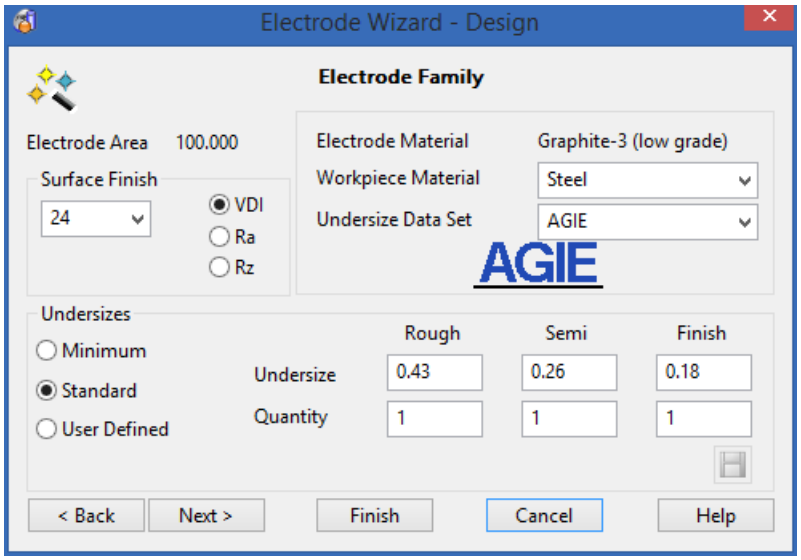

24 Click **Next**.

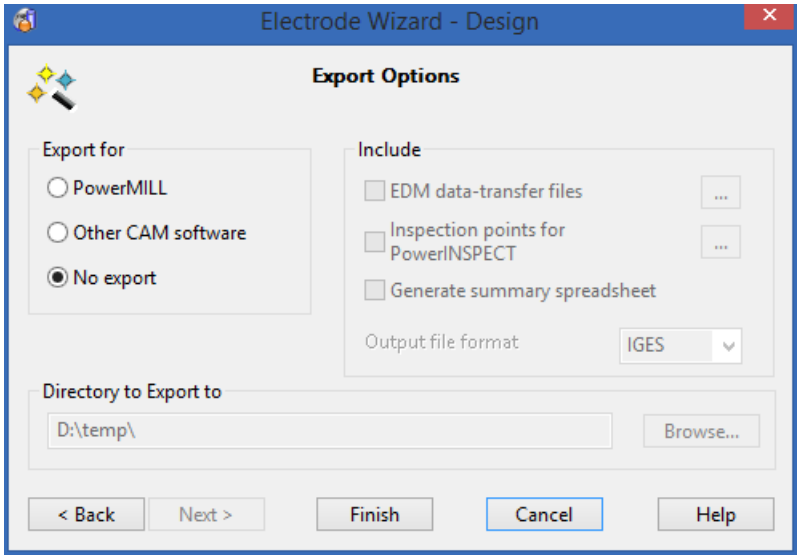

25 Click **Finish**.

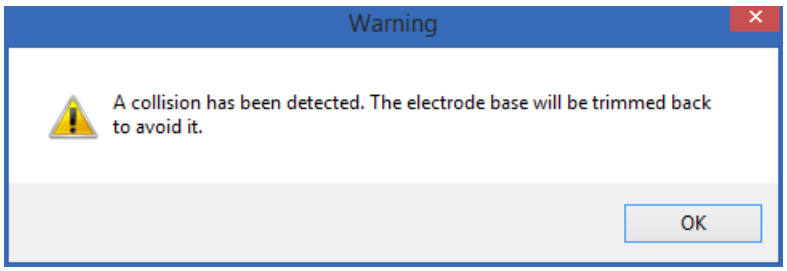

The **Wizard** detects a collision between the electrode and the model because the blank of the electrode is intersecting the model.

When the blank is created, the **Electrode Wizard** adjusts the shape of the blank to avoid the collision and fits the blank around the model.

26 Click **OK**.

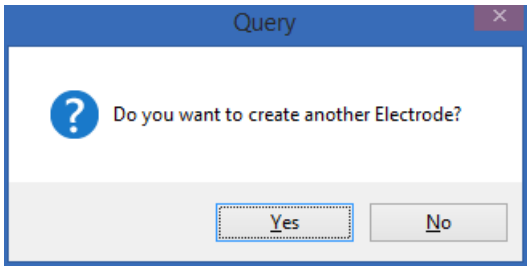

27 Click **No**.

The templates are generated, shown in the image below:

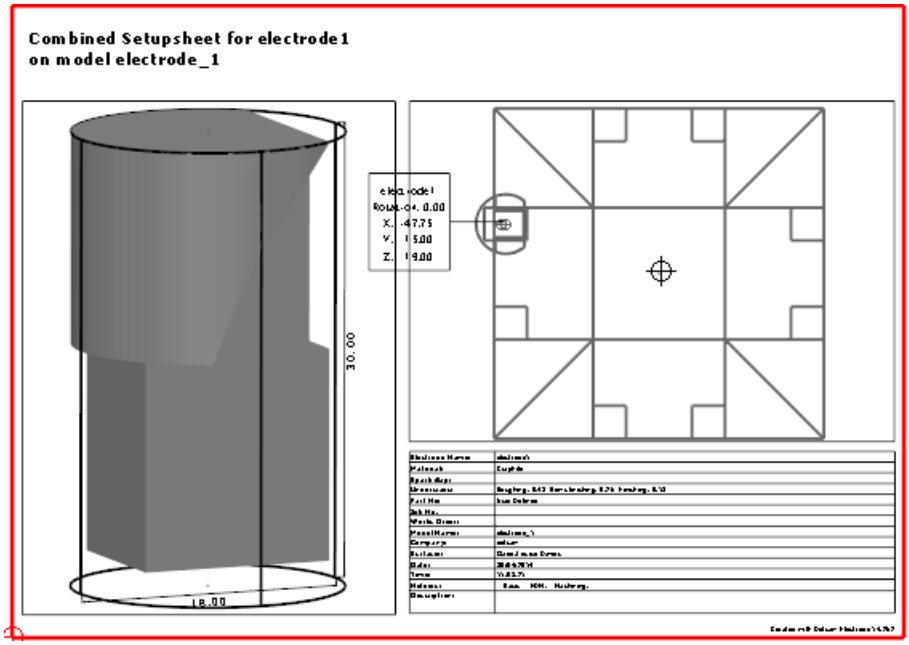

28 Click **Switch to electrode model window** .

The electrode is displayed fitted around the model.

Your model should look like the one shown below:

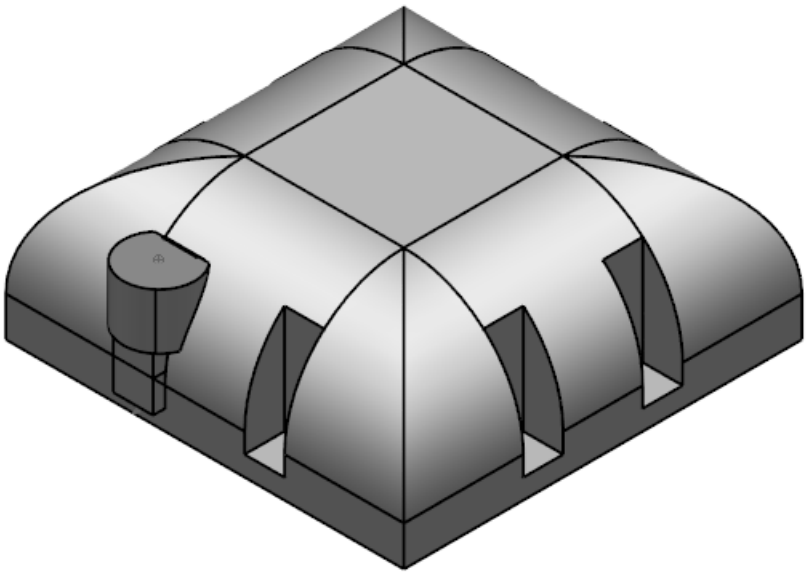

3. Use solid core from selection to create an electrode

If you do not have the licence required for the commands in this tutorial*, go to the next step in the tutorial and click **Import Data (Electrode_3.psmodel)**.

View the AVI
Import Data
Step by step instructions

The model will then be provided with the correct data and you will be able to complete the tutorial.

*In most cases selecting an icon will inform you that the necessary licence is missing. In some modules of PowerSHAPE the icon(s) may be missing entirely.

Solid core from selected faces can be used to create electrodes from tricky areas of a model like slots in the side of a model. Direct modelling tools can then be used to move, rotate and offset faces to stop the electrode from burning into the model.

1 Click the solid.

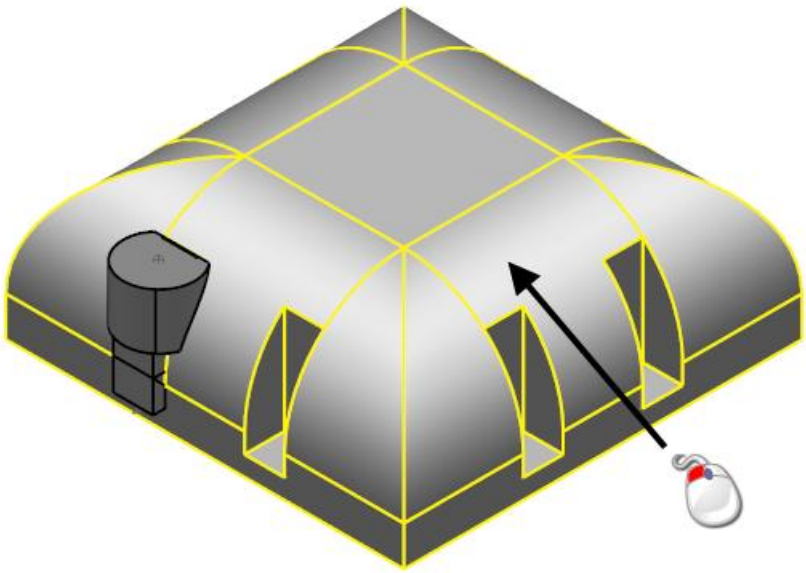

2 Click **Select faces of concave regions** .

3 Click the face shown below:

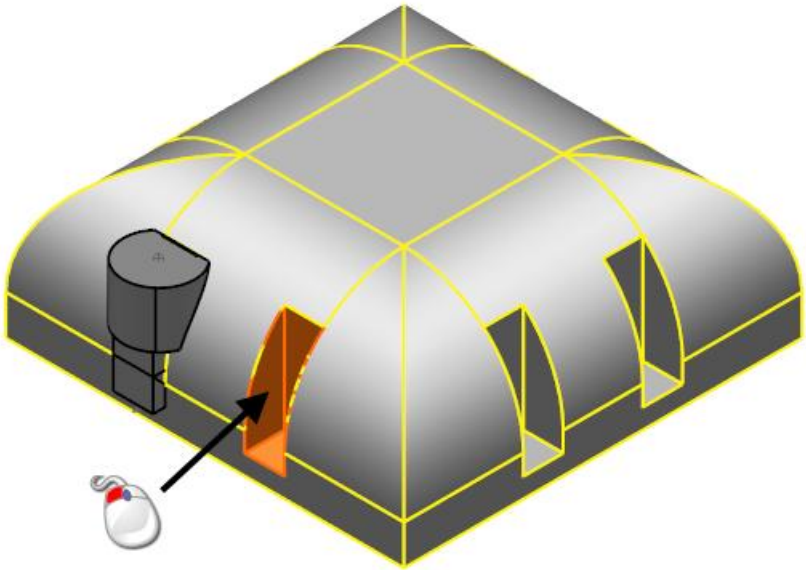

4 Click **Solid** .

5 Click **Create solid core from selection** .

The Solid Core From Selection dialog is displayed.

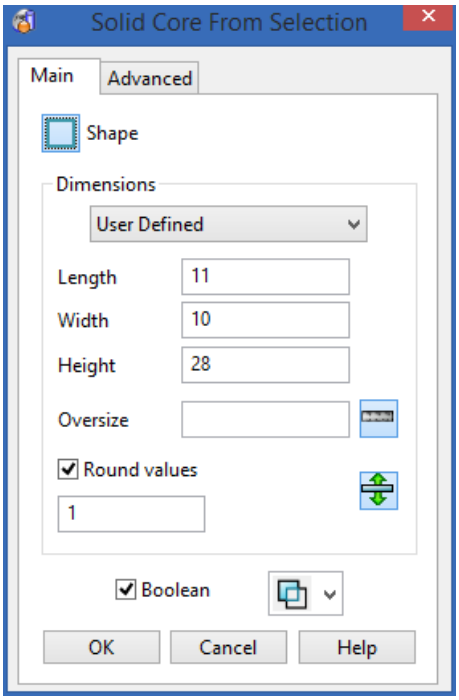

6 Click **3R-494-S12x50** from the **Dimensions** drop-down list.

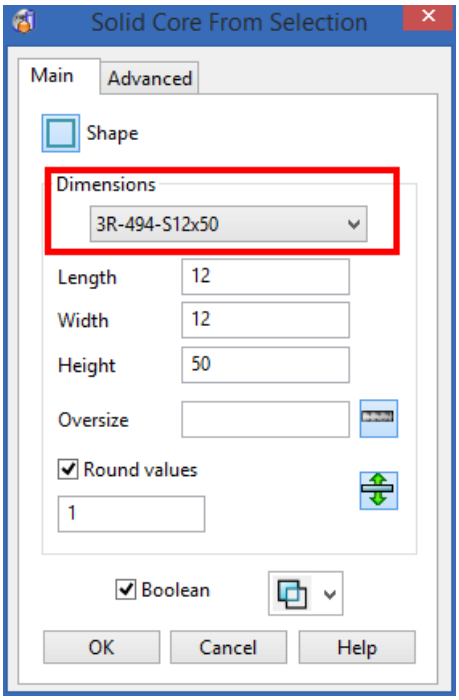

7 Enter a **Length** of **20**.

8 Enter a **Height** of **35**.

A preview of the selection box is drawn in the model.

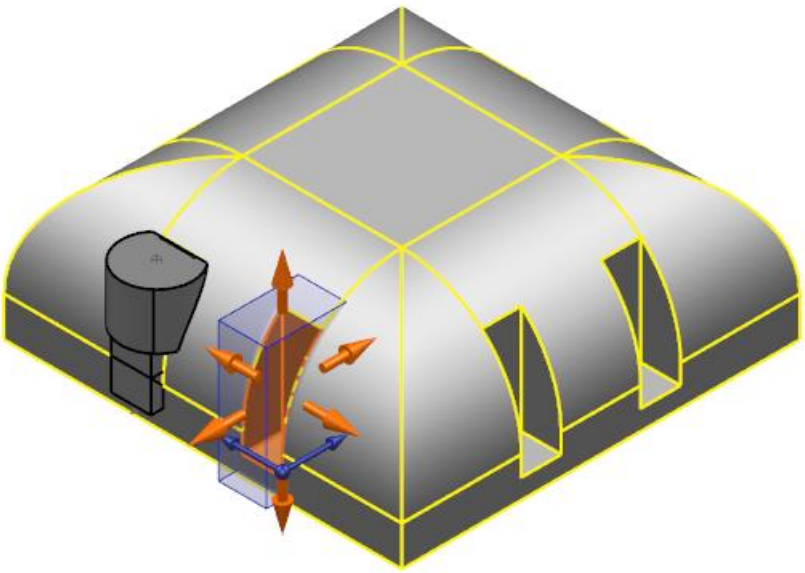

9 Click **OK**.

The core is created.

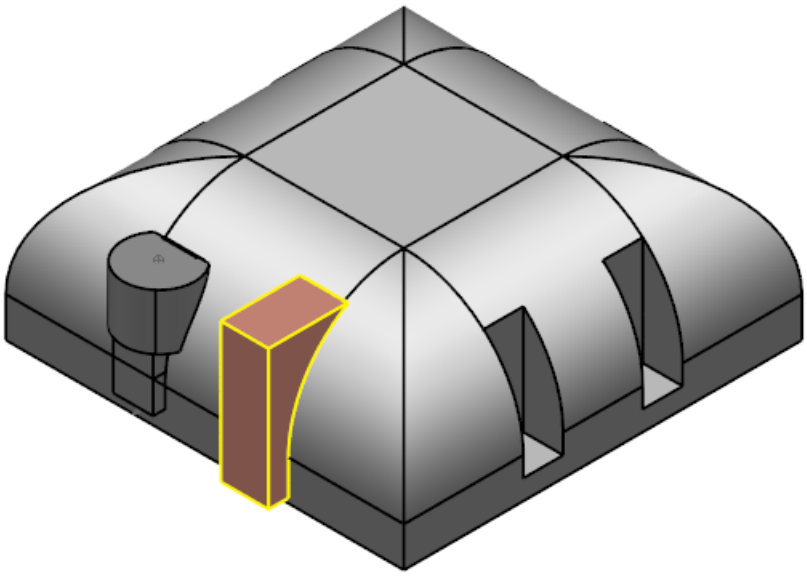

10 Click anywhere in the graphics window to deselect the model.

4. Edit the electrode solid faces

Use Direct modelling to offset the faces of the electrode solid to remove collisions between the electrode and the model **Electrode_4.psmodel**.

1 Click the solid.

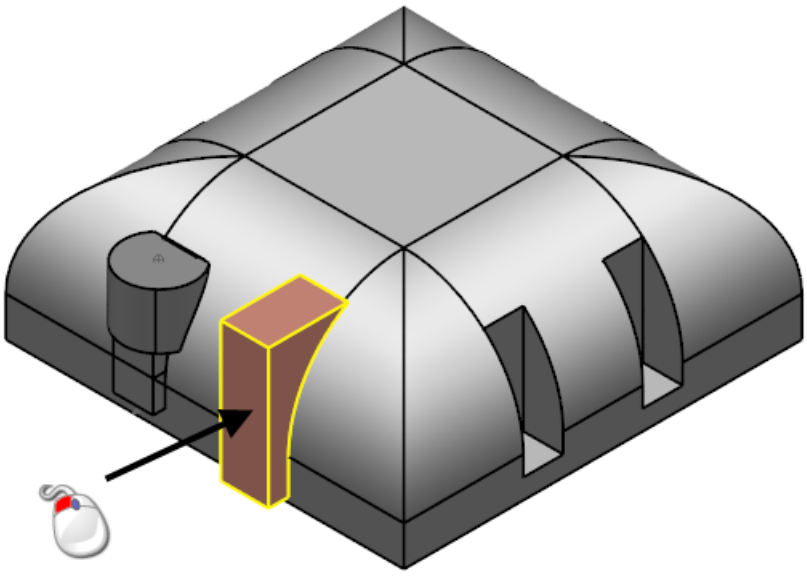

2 Click **View.**

3 Click **Blank.**

4 Click **Blank Except.**

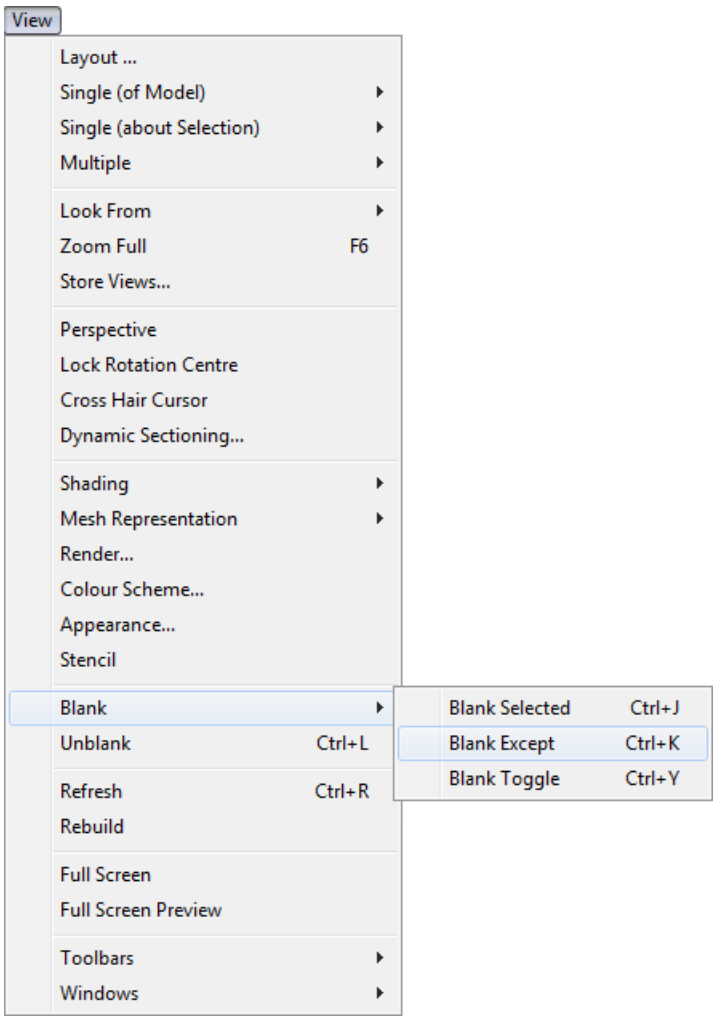

5 Click **View ISO3** .

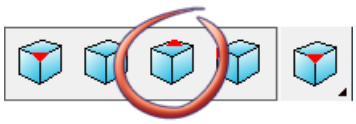

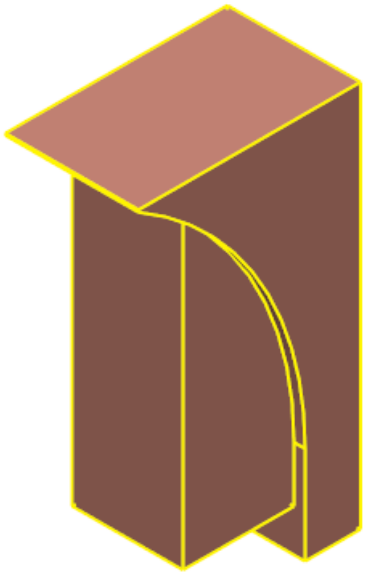

6 Click **Select faces of continuous regions** .

7 Click the face shown below:

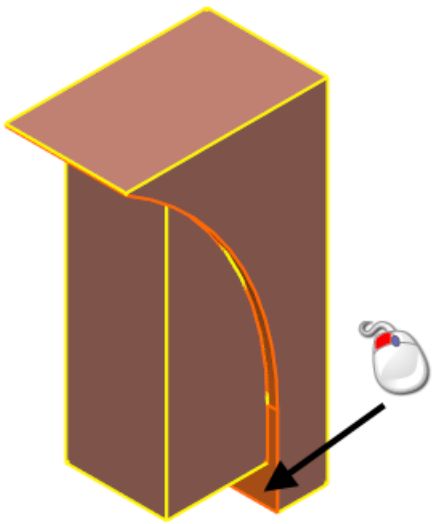

8 Click **Show General Edits Options** .

Keep clicking the button until the toolbar shown below is displayed.

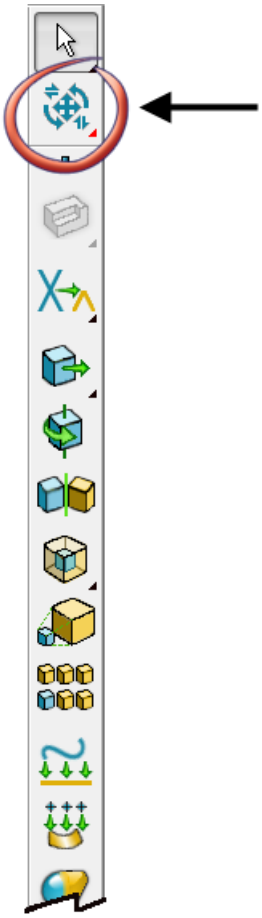

9 Click **Offset items** .

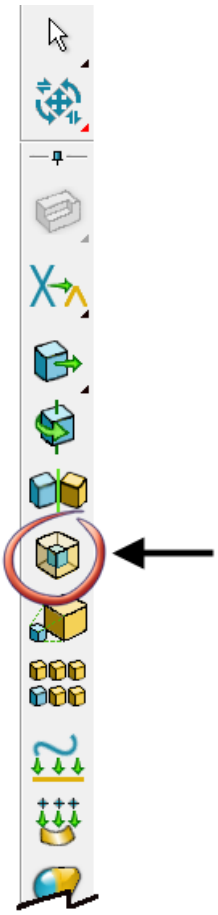

The **Offset** toolbar is displayed.

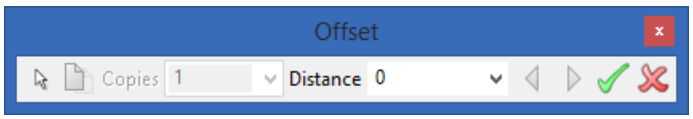

10 Enter a **Distance** of **-1** .(Press **Enter**.)

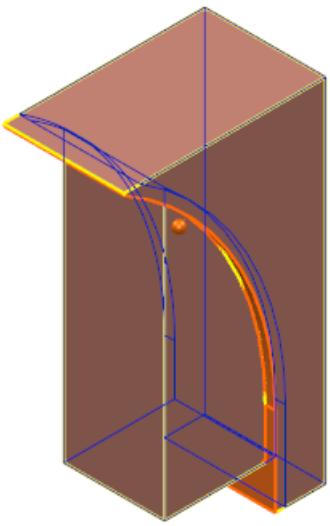

11 Click **Apply** .

12 Click **OK**.

13 Click **Dismiss** .

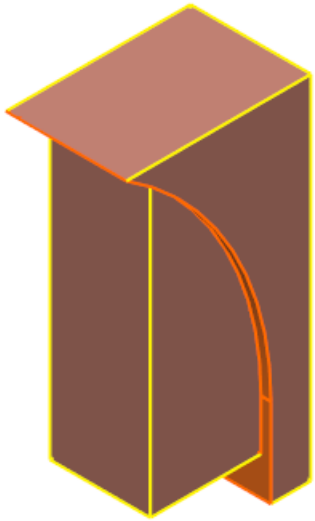

14 Click **Blank Selected** using the right mouse button.

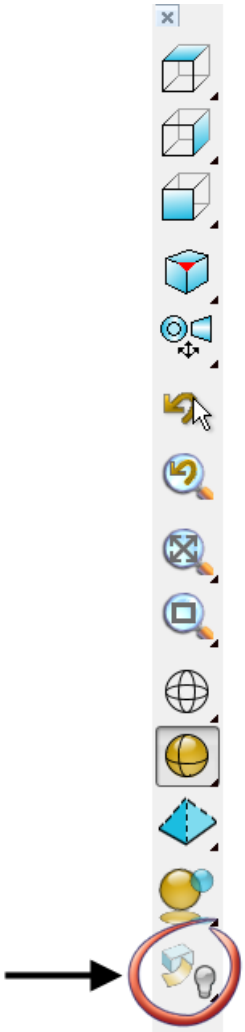

15 From the flyout, click **Unblank**.

16 Click **View from Front** .

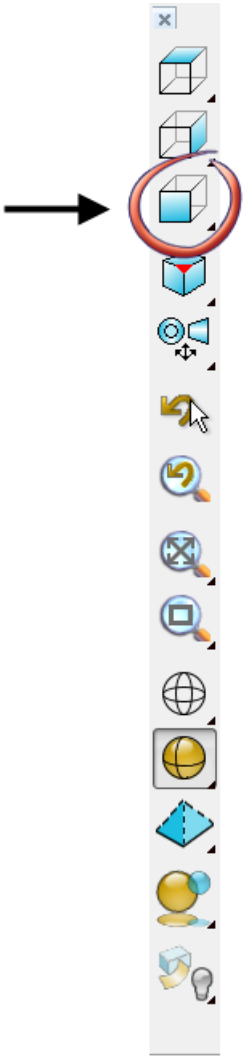

17 Click anywhere in the graphics window to deselect the model.

A gap can be seen between the electrode and model.

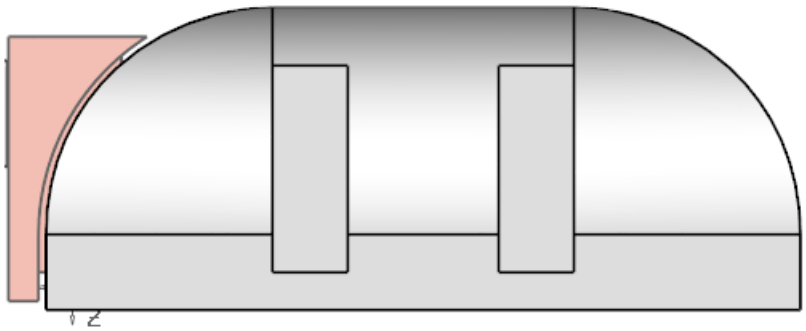

5. Register the solid as an electrode

Register the solid as an electrode and add it to the setup sheets.

1 Click **Tools > Options** from the Main menu.

2 Click **Manufacturing > Electrode > General**.

3 Click **Automatically calculate burn vector** it is displayed unticked. This will help to positon the blank correctly.

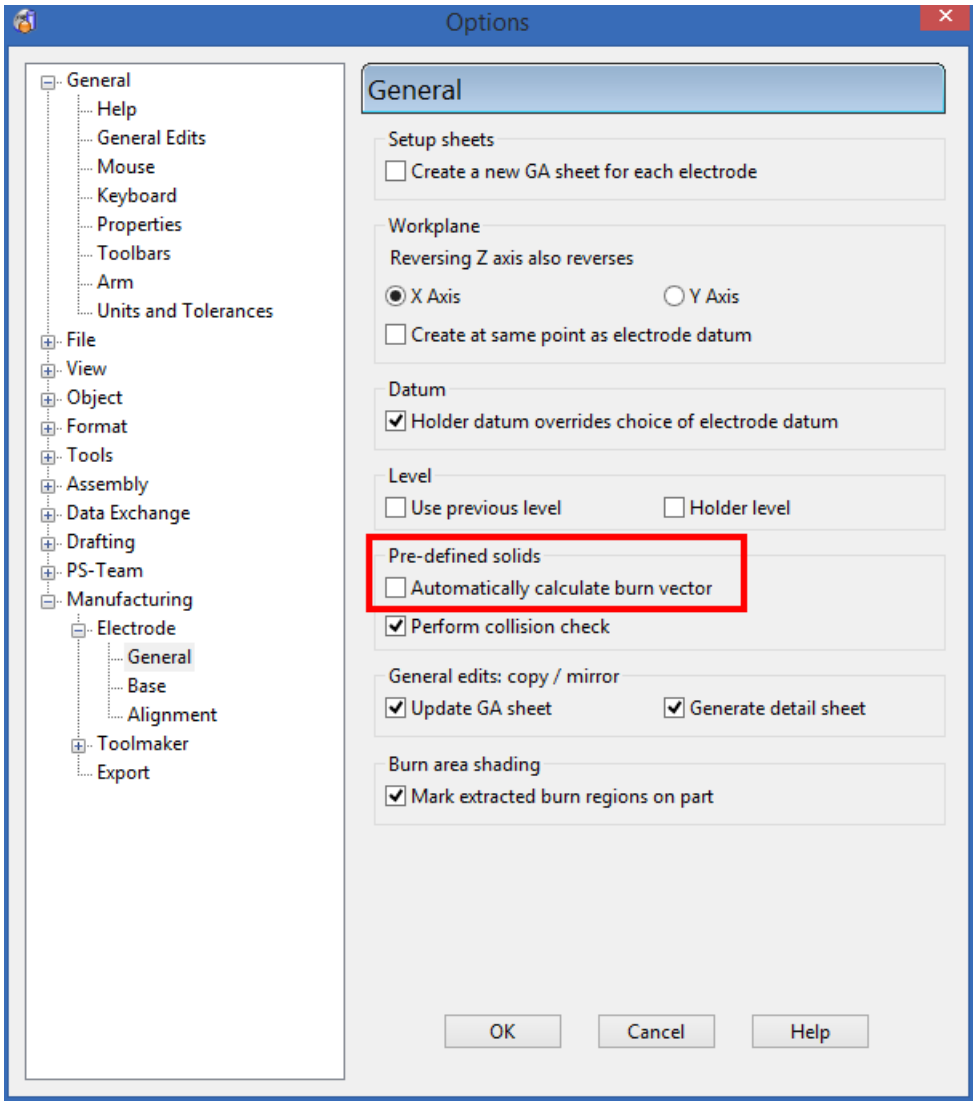

4 Click **OK**.

5 Click the solid.

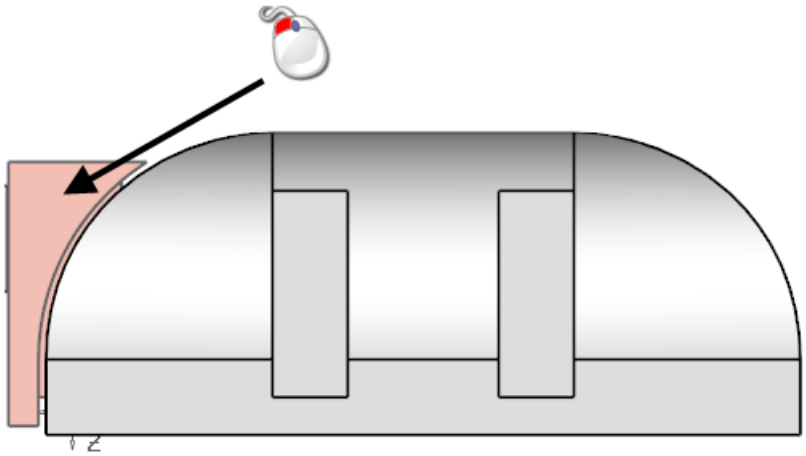

6 Click **Create an electrode** .

7 Click **No**.

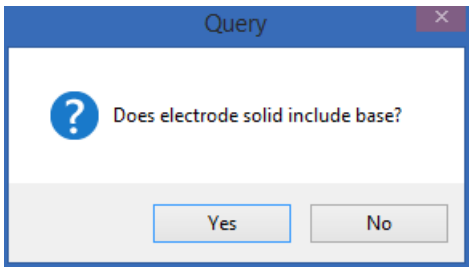

8 Click **3R-494-S22x50** from the **Dimensions** drop-down list.

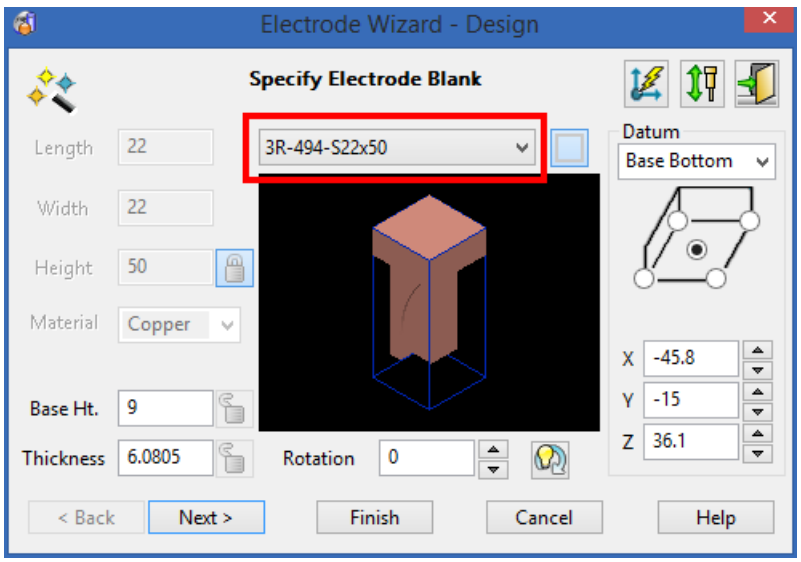

9 Click **Finish**.

10 Click **OK**.

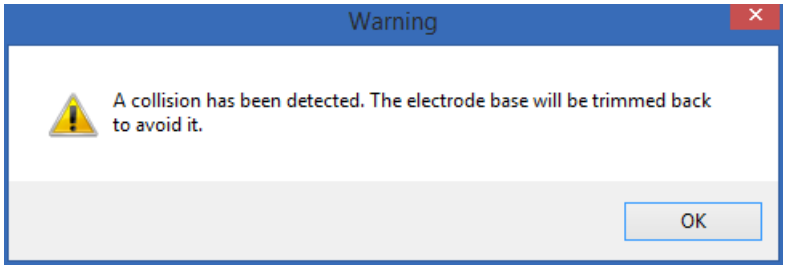

11 Click **No**.

The solid is turned into an electrode and drawings are created for the electrode.

12 Click **Switch to electrode model window** .

13 From the flyout, click **View ISO1** .

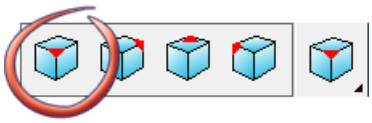

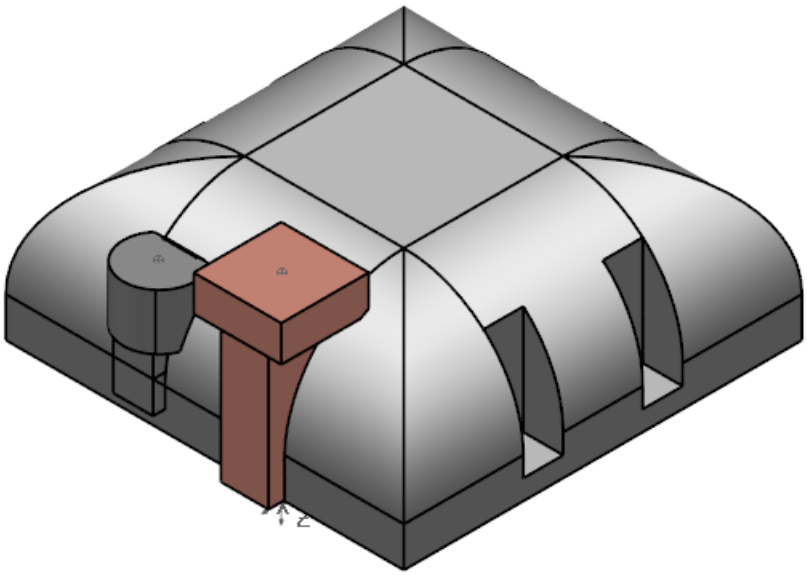

Copying using general edits

6. Copy and rotate the electrodes

Use General Edits to rotate and copy the electrodes with model **Electrode_6.psmodel**.

1 Hold down the **Shift** key and click the two electrodes, as shown below:

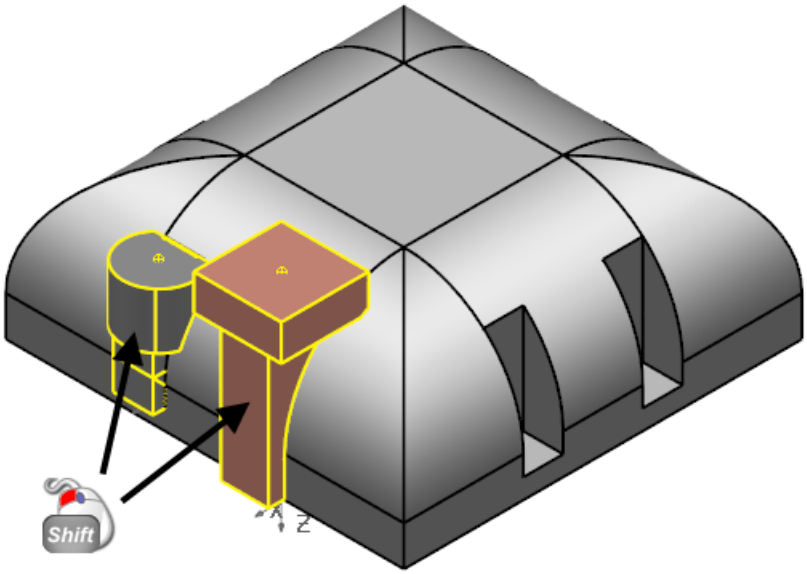

2 Click **Show General Edits Options** .

The General Edits toolbar is displayed.

3 Click **Rotate items** .

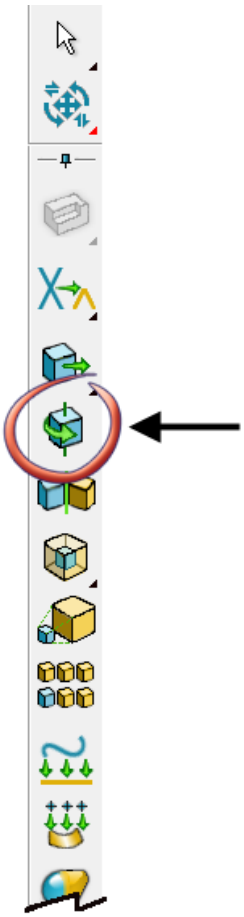

The **Rotate** toolbar is displayed.

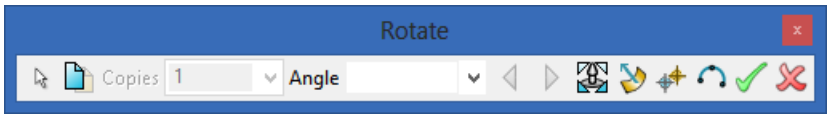

4 Click **Copy the selected items** .

5 Click **90** from the **Angle** drop-down list.

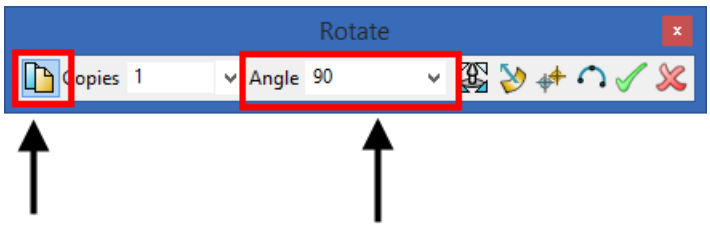

A preview is drawn on the model.

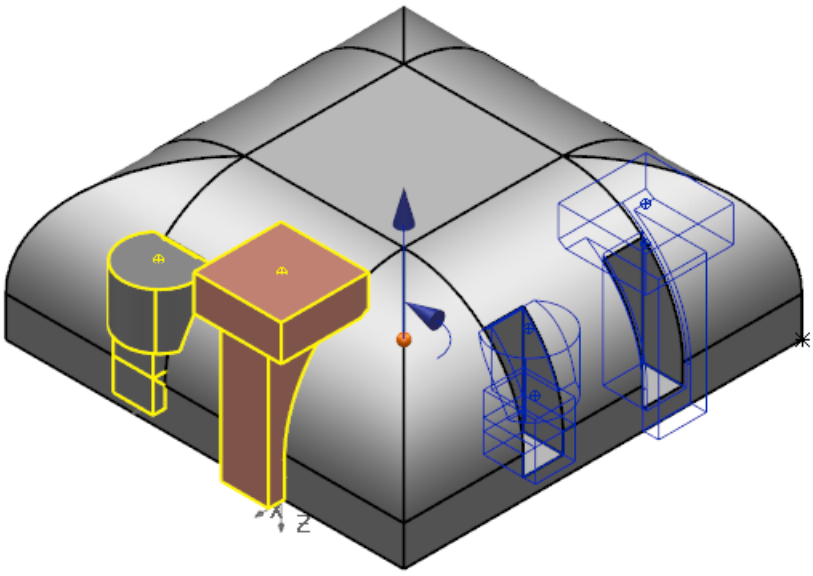

6 Click **Apply** .

7 Click **No**.

8 Click **Dismiss** .

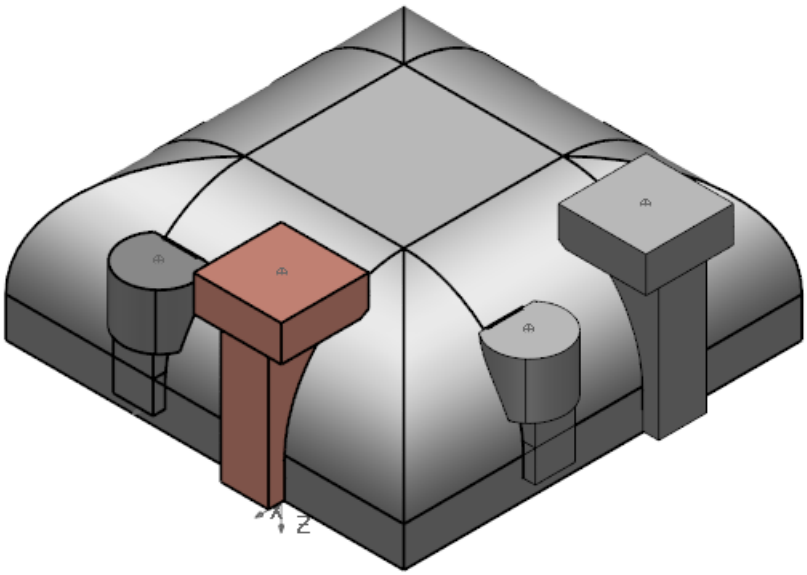

9 Click **Switch to electrode GA window** .

The electrodes have been added to the GA drawing.

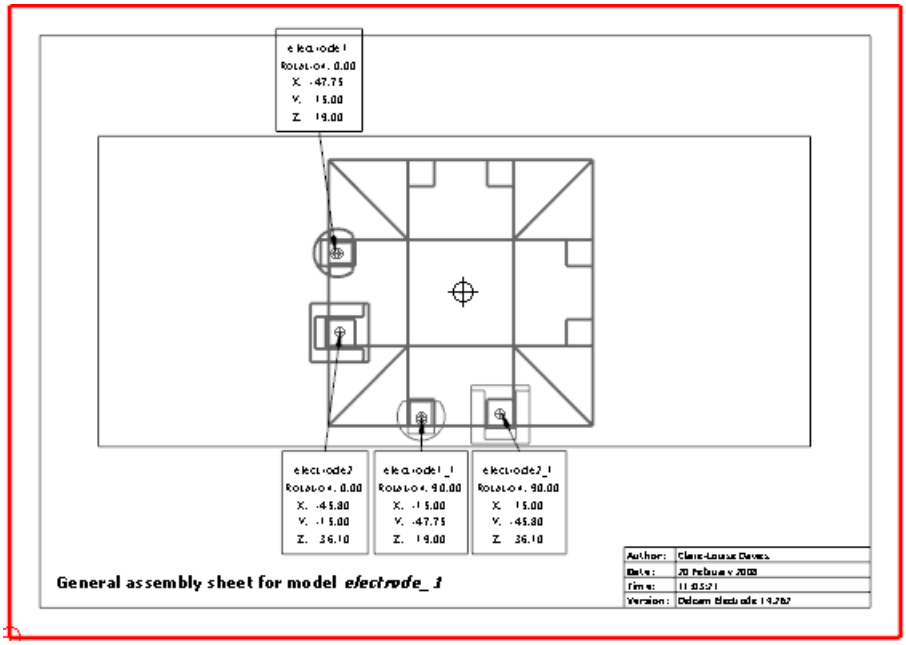

10 Click **Switch to electrode model window** .

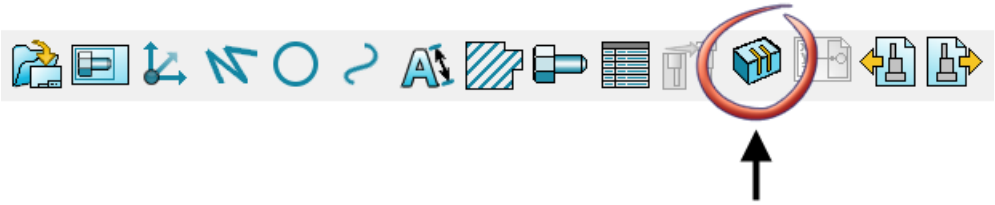

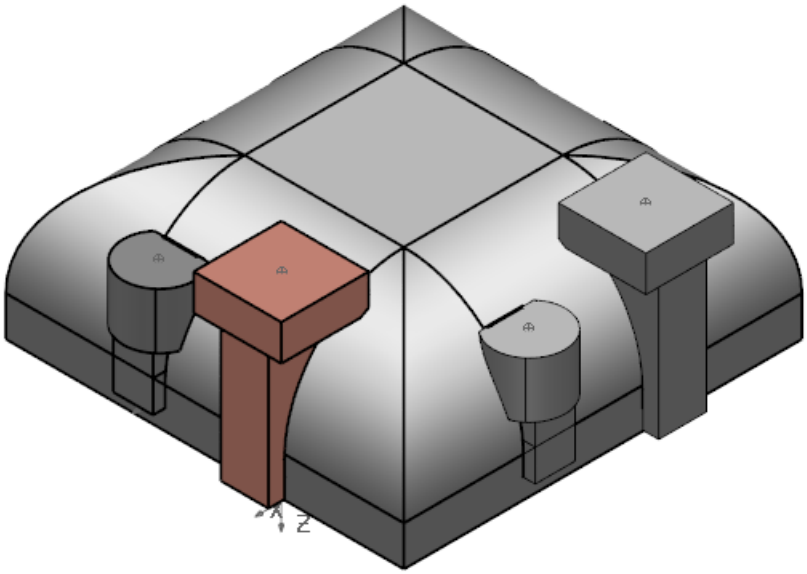

7. Copy and mirror the electrodes

Use General edits to mirror and copy the electrodes with model **Electrode_7.psmodel**.

1 Hold down the **Shift** key and click the two electrodes shown in the image below:

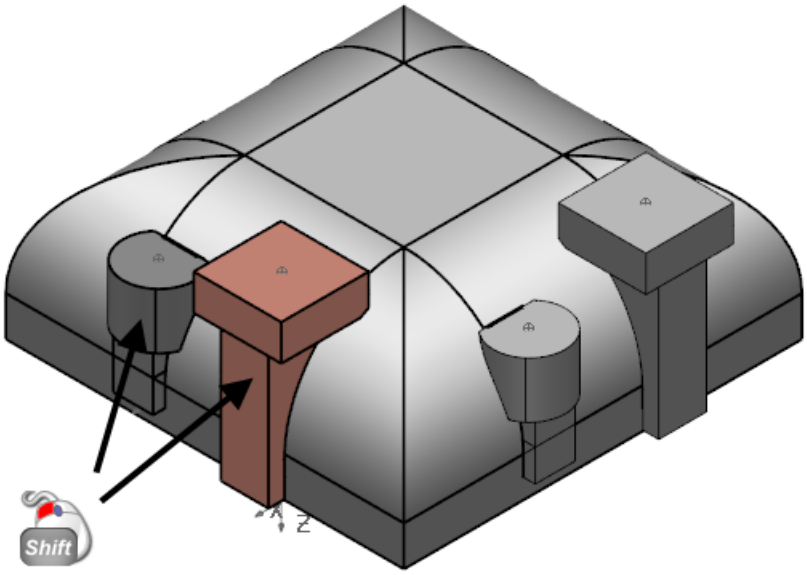

The two original electrodes are selected.

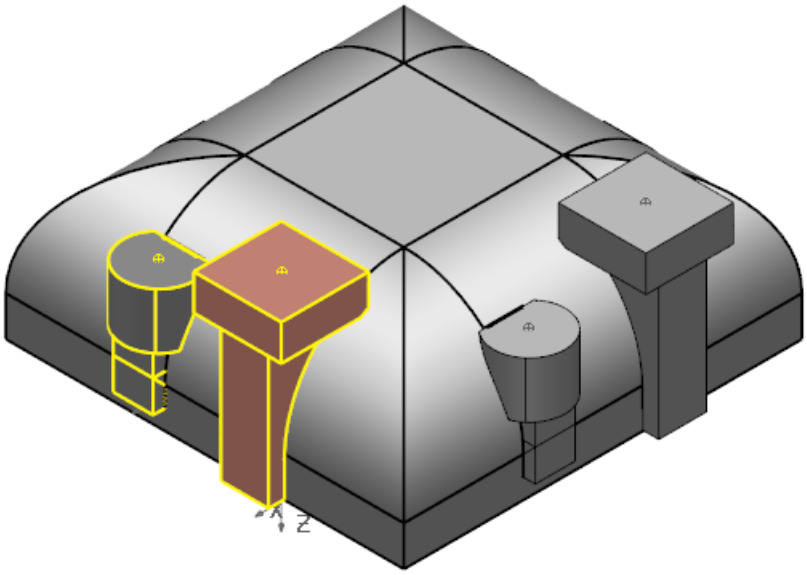

2 Click **Show General Edits Options** .

Keep clicking the button until the toolbar shown below is displayed.

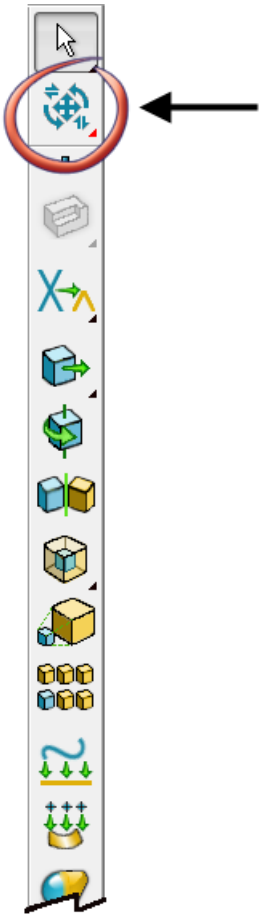

3 Click **Mirror/symmetrise object** .

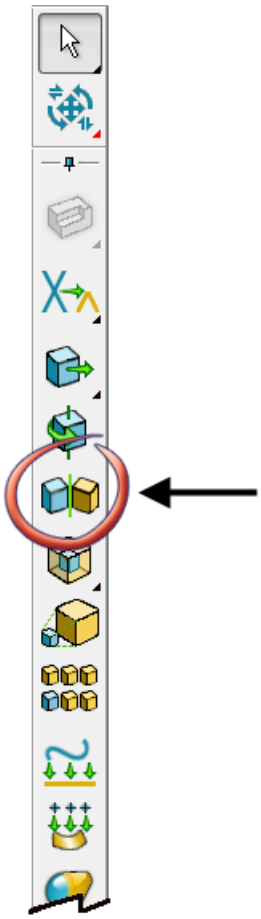

The **Mirror** toolbar is displayed.

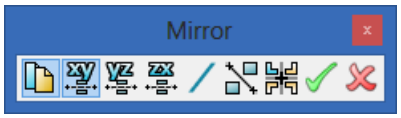

4 Click **Mirror in YZ** .

Previews are drawn of the electrodes.

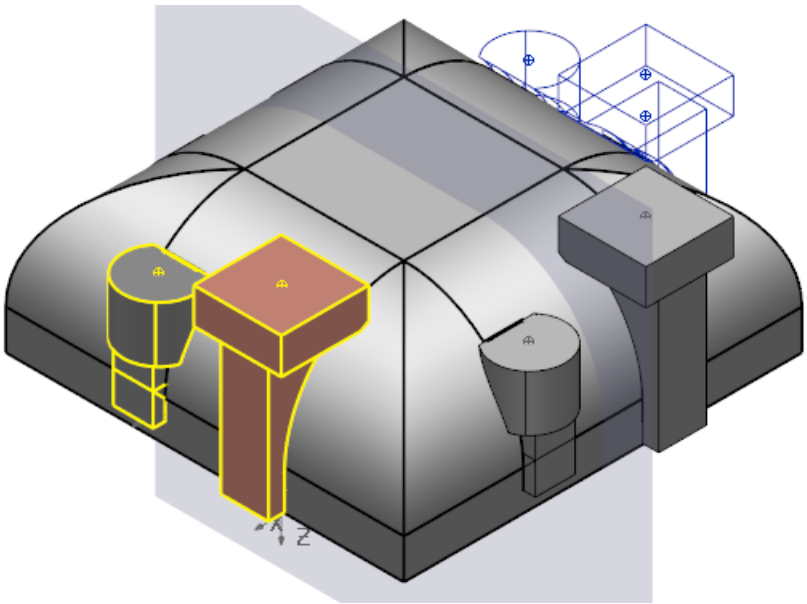

5 Click **Apply** .

6 Click **No**.

7 Click **Dismiss** .

Copies of the electrodes are created.

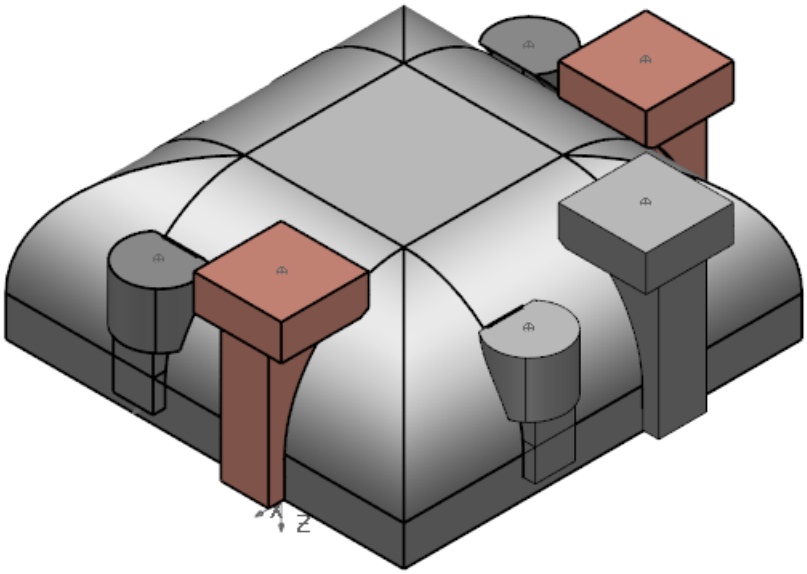

8 Click **Switch to electrode GA window** .

This shows the two existing electrodes and the new electrodes.

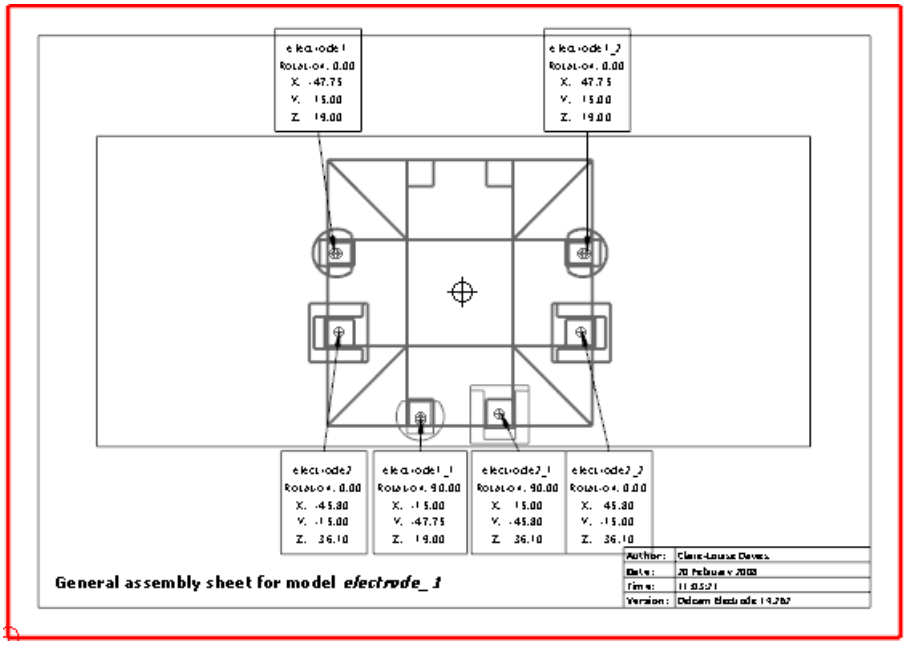

9 Click **Switch to electrode model window** .

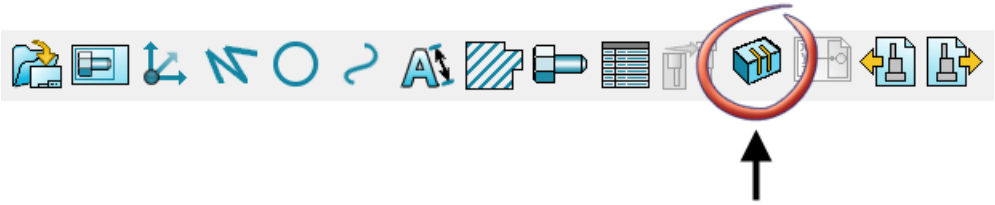

Simulating the path of the electrode

8. Create and simulate the vector burn

1 Click **Import Data (Electrode_8.psmodel)**.

View the AVI
Import Data
Step by step instructions

2 Click the solid.

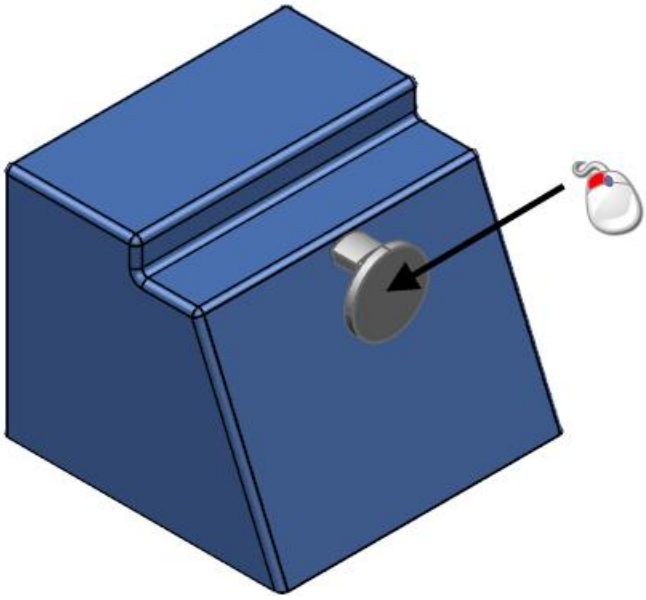

3 Click **Create an electrode** .

4 Click **Yes**.

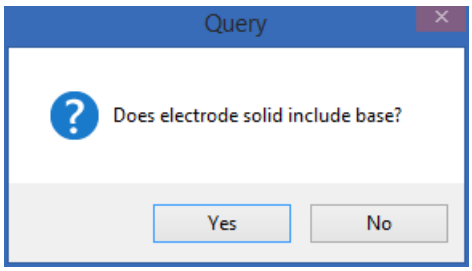

5 Click **Define burn area** .

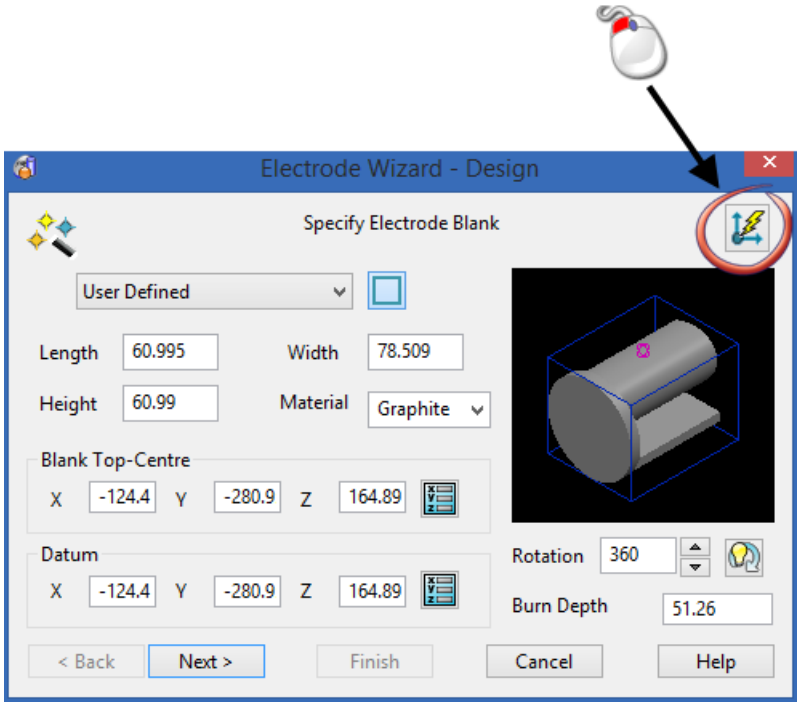

The Vector Burn dialog is displayed.

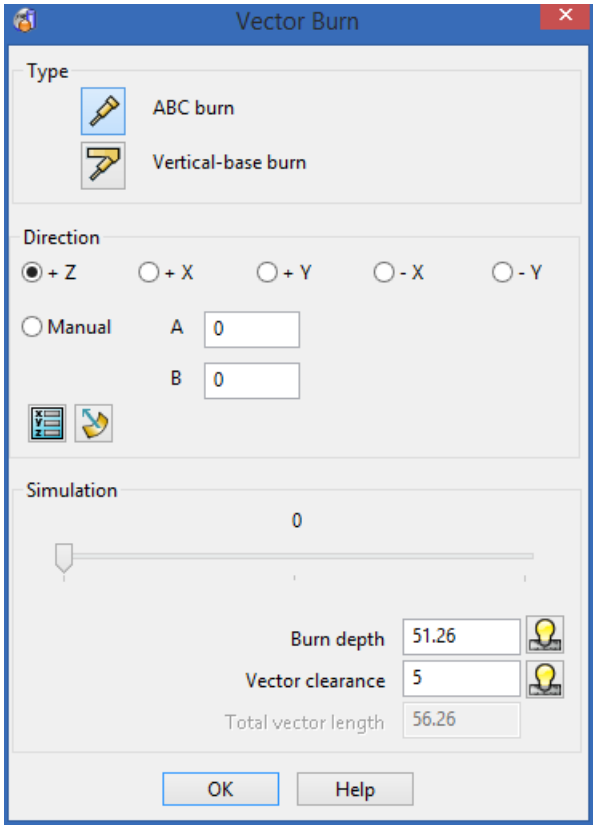

6 Click a **Direction** of-**Y**.

7 Drag the **Simulation** slider to see the Vector burn movement.

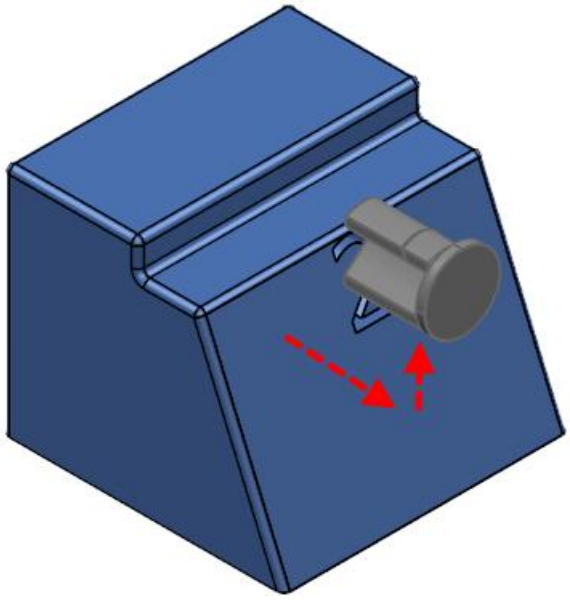

8 Click **Automatically calculate burn depth** .

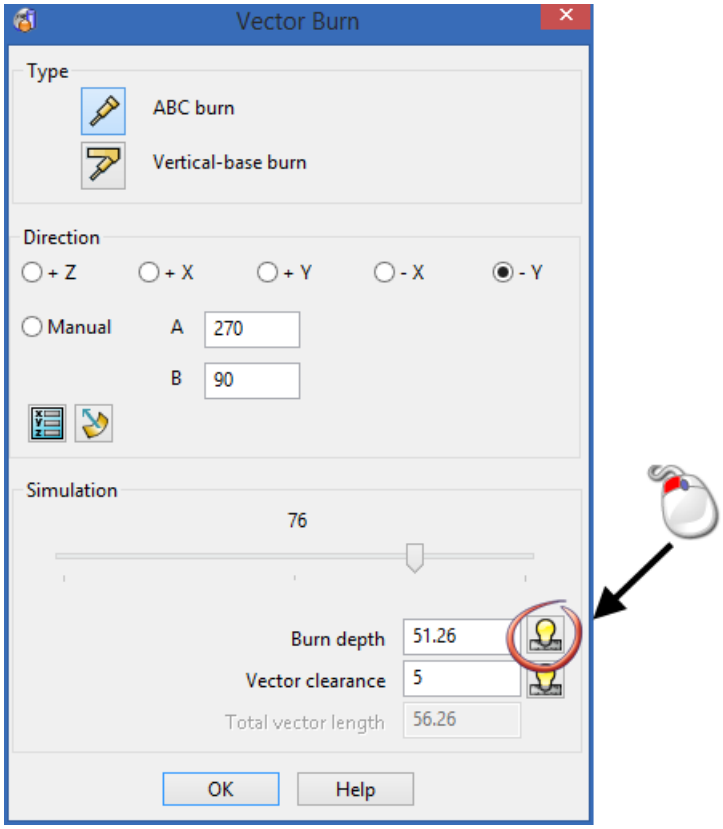

The Burn depth value is calculated and updated.

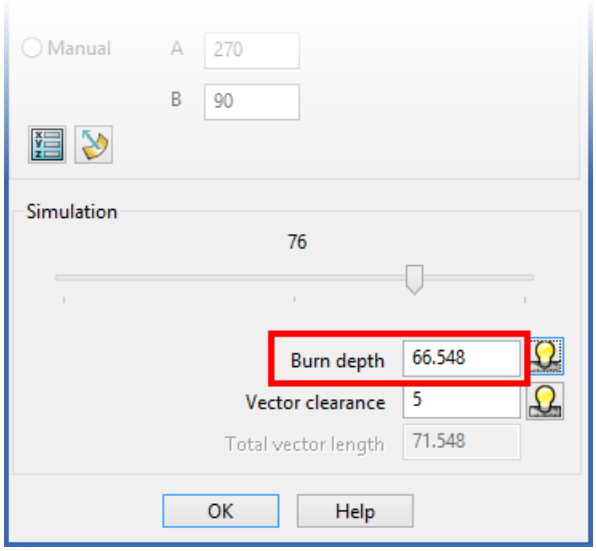

9 Click **OK**.

10 Click **Next**.

11 Click **Finish**.

12 Click **No**.

13 Click **Switch to electrode model window** .

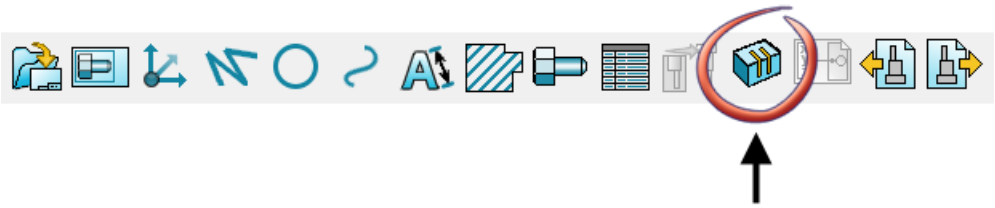

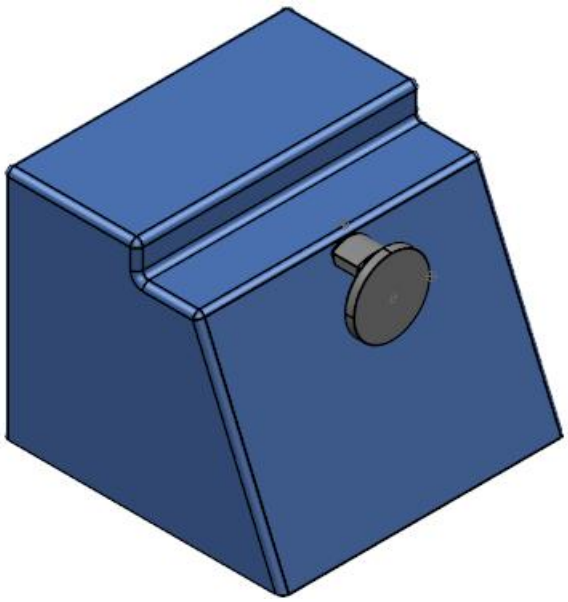

9. Simulate the electrode burn motion

1 Click on the electrode **Electrode_9.psmodel** using the right mouse button.

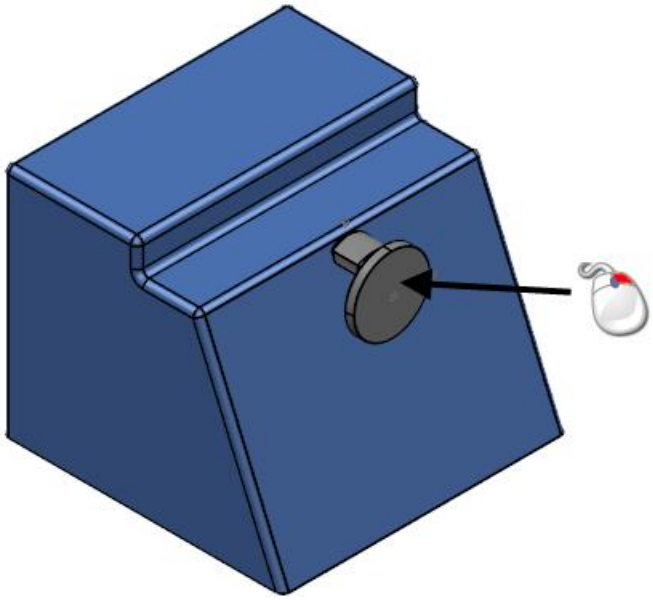

2 Click **Burn-area Shading**.

3 Click on the electrode using the right mouse button.

4 Click **Simulation**.

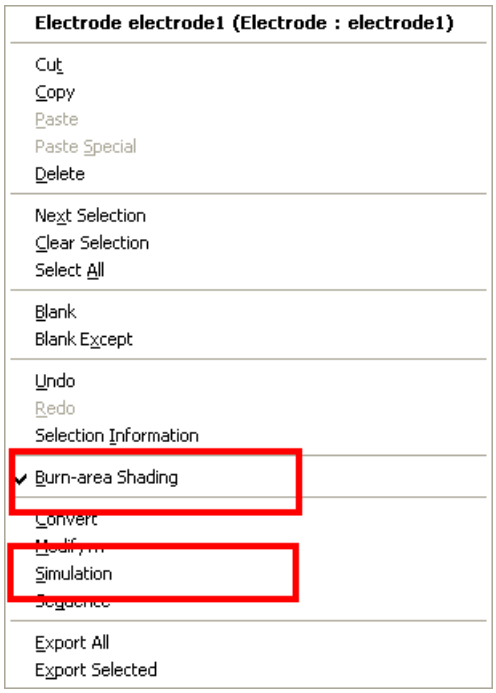

The **Electrode Simulation** dialog is displayed.

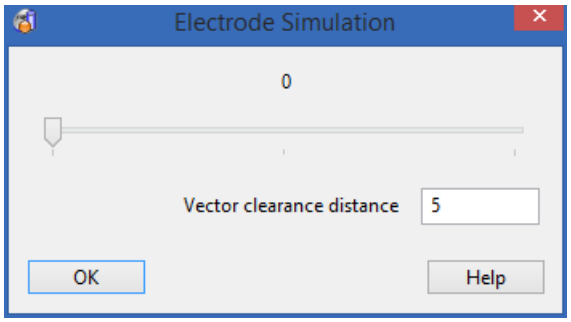

5 Move the slider from the left to the right.

The electrode is moved out of the model and up.

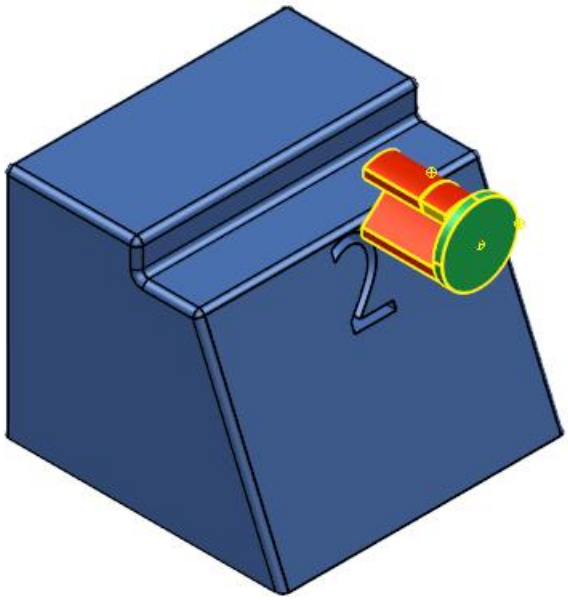

The simulation of the electrode burning motion reflects the **Extraction Vector** you defined in the previous step of the tutorial.

6 Click **OK**.

10. Edit the electrode properties

1 Click **Import Data (Electrode_10.psmodel)**.

View the AVI
Import Data
Step by step instructions

2 Click on the electrode using the right mouse button.

3 Click **Modify**.

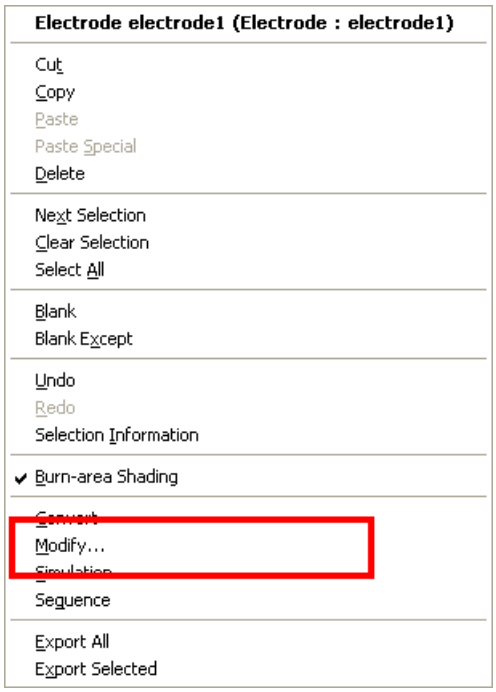

The **Edit Electrode** dialog is displayed.

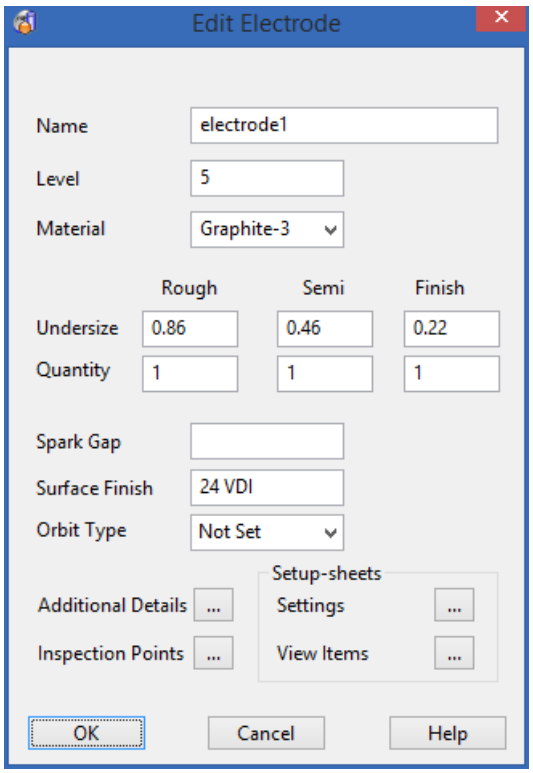

Do the following:

1 Change the **Material** to **Copper**.

② Enter a **Spark Gap** of **2**.

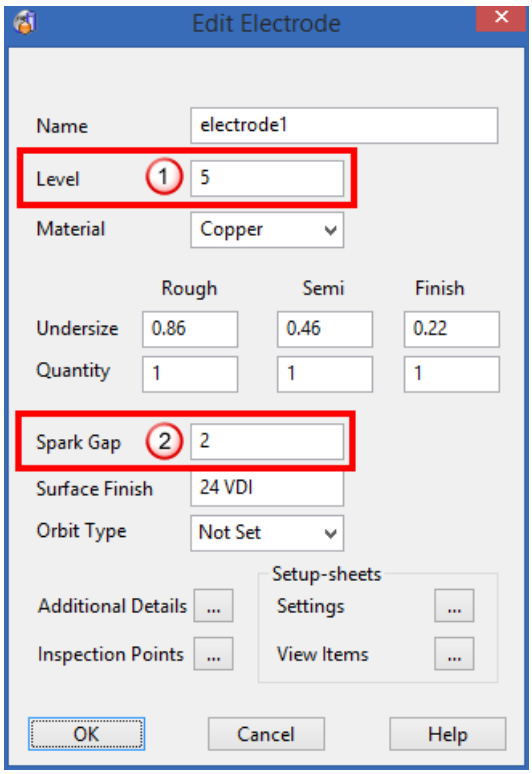

4 Click **OK**.

The setup sheets are generated with the new settings.

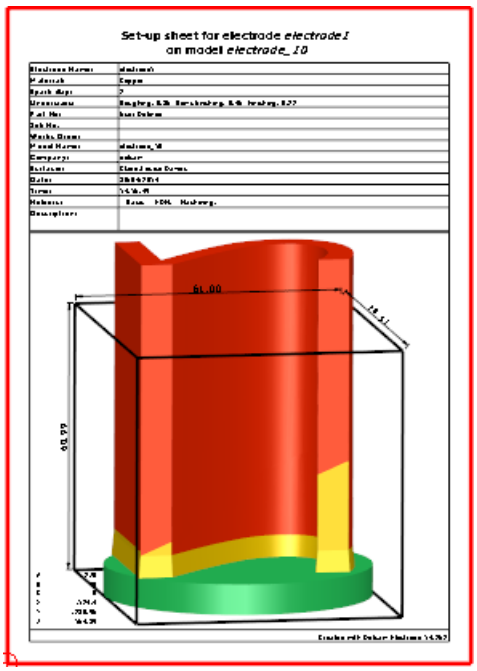

5 Click **Switch to electrode model window** .

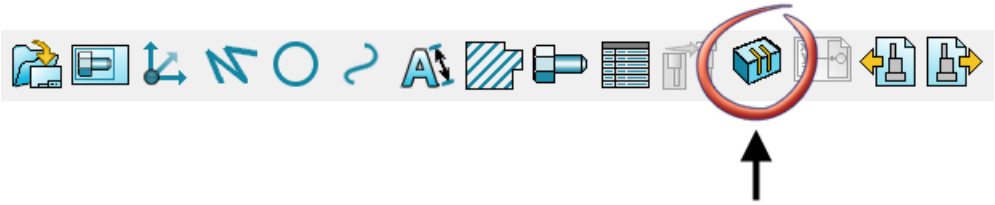

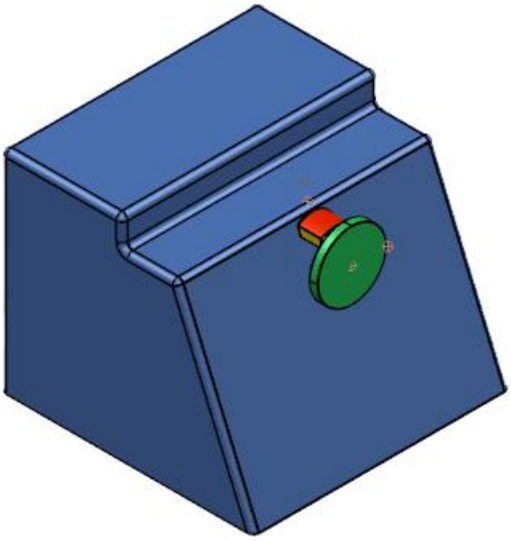

6 Click **File** from the main menu.

7 Click **Close**.

8 Click **No**.

Customising new templates

11. Create a new drawing template

Add your own custom drawing to the electrode_template psmodel. Add views, text and electrode substitution text to set the template to your own standard.

1 Click **Module**.

2 Click **Electrode**.

3 Click **Open an existing Model** .

The **Open Model** dialog is displayed:

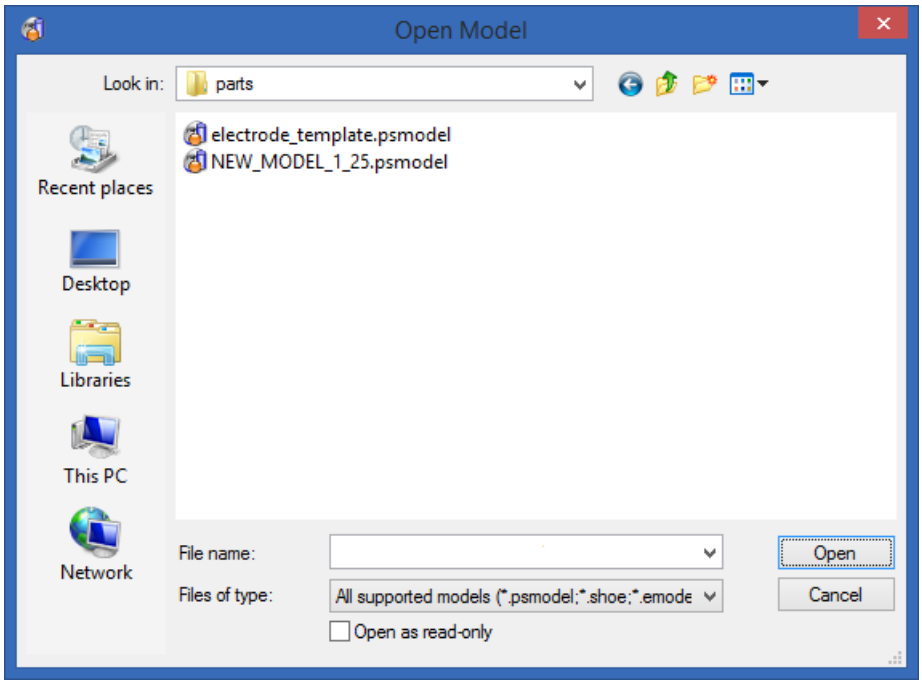

This **Open Model** dialog is displayed when you are working outside the shareddb.

The following **Open Model** dialog shown below is displayed when you are working inside the shareddb.

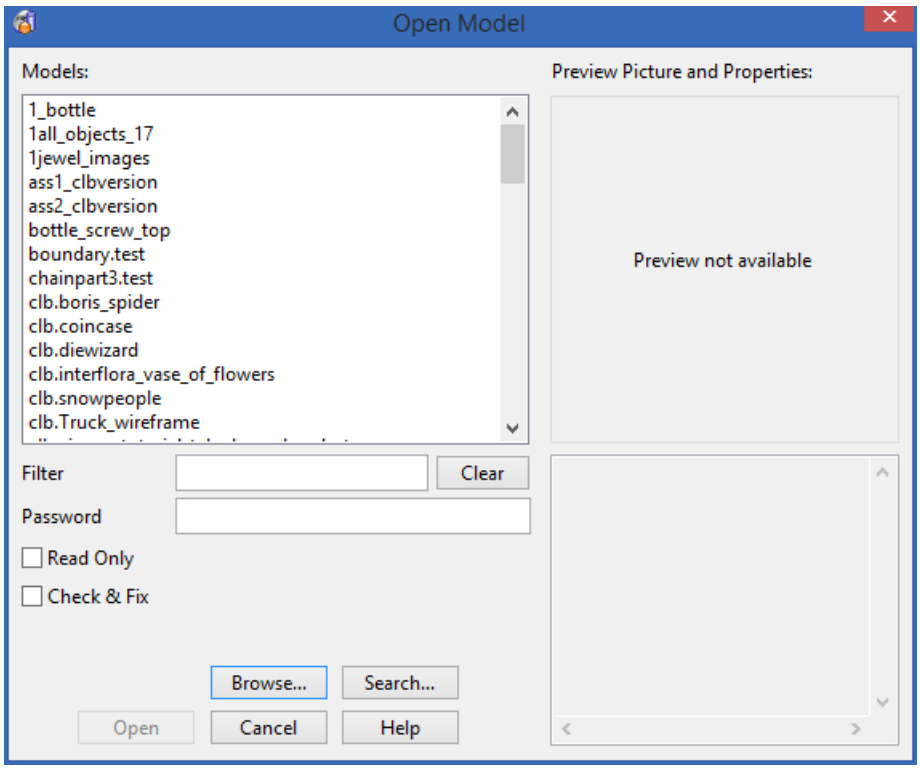

4 Select **electrode_template** from the list.

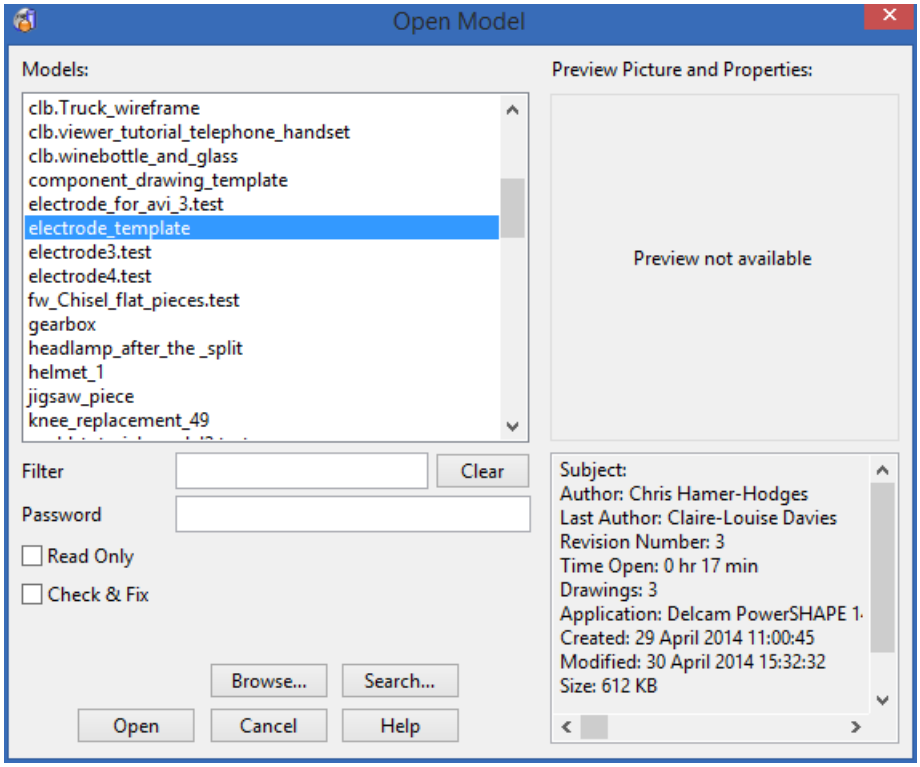

5 Browse to the following folder (based on the default install directories).

C:\Users\Public\Public Documents\Delcam\parts

6 Click **electrode_template**.

7 Click **Open**.

8 Click **Modelling Mode** using the right mouse button.

9 From the flyout, click **Drafting Mode** .

The Drawing Selector dialog is displayed.

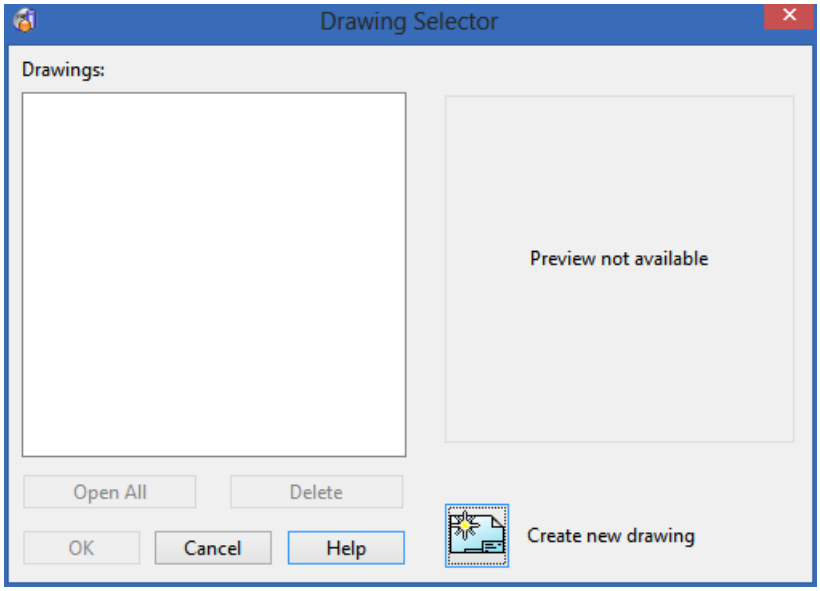

10 Click **Create new drawing** on the dialog.

View creation mode is started automatically.

12. Add text to the template

1 Click **Annotation** .

2 Click **Horizontal Text** .

3 Do the following:

① Select the text font **Tahoma.**

② Change the text height to **10.**

③ From the drop-down list, select the text justification **left justify.**

④ From the drop-down list, select the text origin **bottom left.**

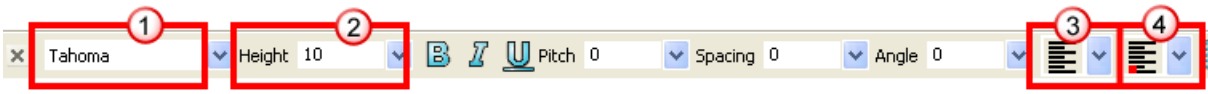

4 Click in the **Command Input** box in the **Status Bar** and type:

550 2.5

5 Press **Enter.**

6 Write the text shown below.

Name (Press **Enter**.)

Job Details (Press **Enter**.)

Works Orders (Press **Enter**.)

Description (Press **Enter**.)

Email (Press **Enter**.)

Electrode Name (Press **Enter**.)

Material

7 Your drawing should like the image shown below:

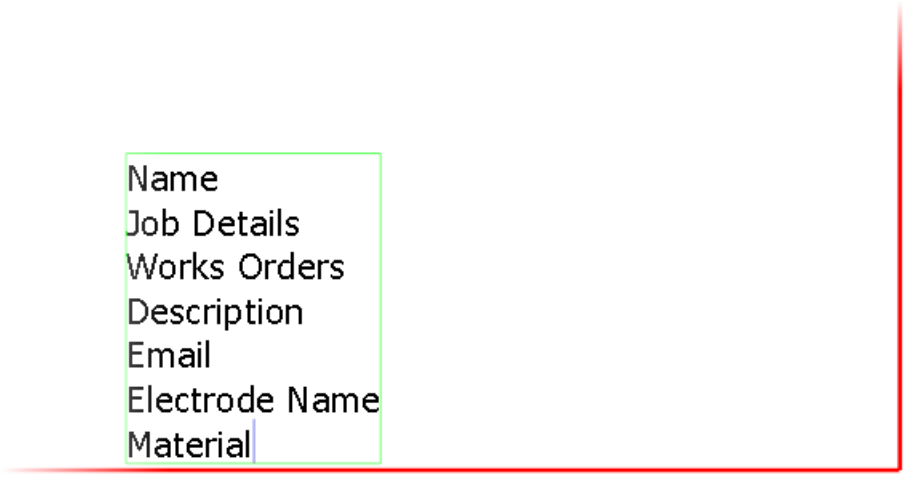

8 Click **Select** .

13. Create electrode text substitutions

Use standard text substitutions or create new ones that the values can be entered when the electrode wizard is run.

1 Click **Show General Edits Options** using the right mouse button.

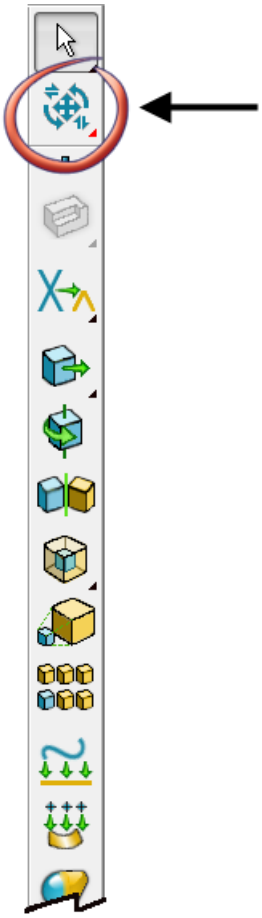

The **General Edits** options flyout is displayed.

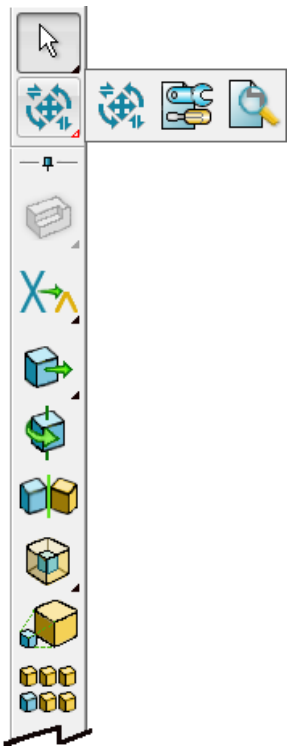

2 Click **Show the model analysis options** .

The model analysis toolbar is displayed.

3 Click **Show model contents list** .

The File Properties dialog is displayed.

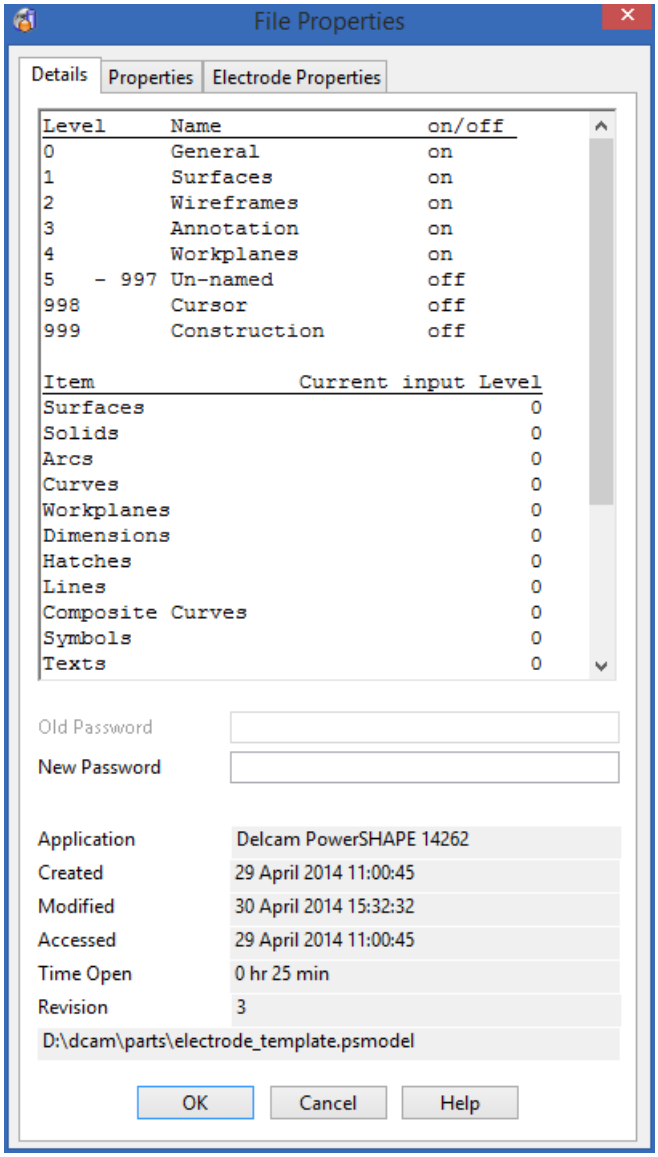

4 Click the **Electrode Properties** tab.

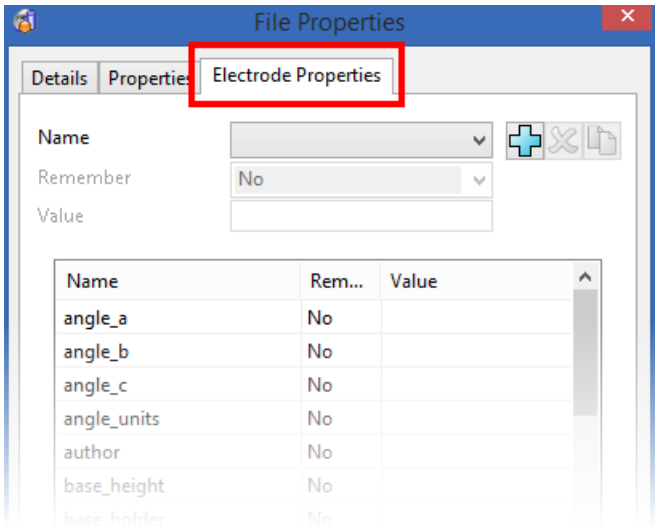

5 Click **New electrode property** .

detail4 is displayed in the **Name** drop-down list.

6 Click **Yes** from the **Remember** drop-down list.

Selecting **Yes** will remember the value in the electrode dialog for each electrode created.

7 Enter **Email** for the **Value**.

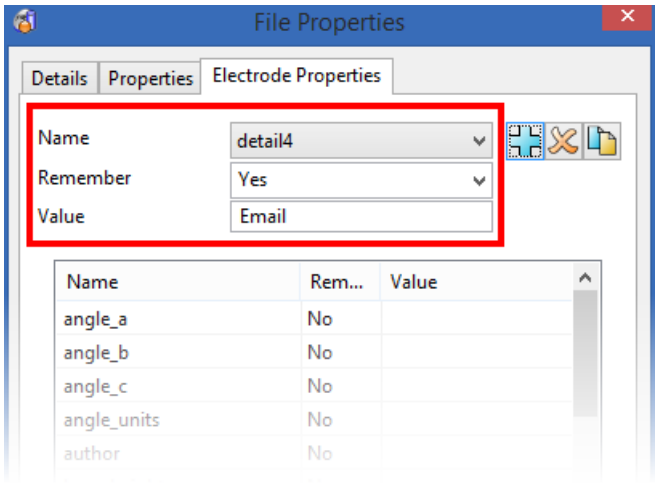

It is added into the list as follows:

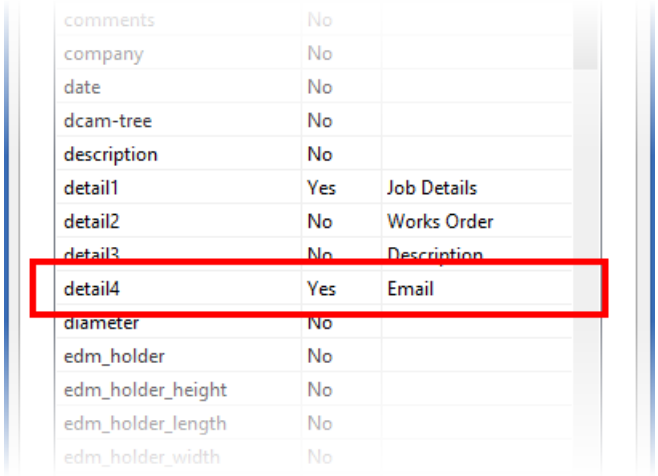

8 Click **OK**.

The property can be added to a drawing using the text substituion string **%[detail4]**.

It is displayed in the **Addition details** dialog (from the **Electrode wizard**) as **Email**.

14. Use electrode text substitutions

1 Click **Annotation** .

2 Click **Horizontal Text** .

3 Click in the **Command Input** box in the **Status Bar** and type:

660 2.5

4 Press **Enter**.

5 Click **Display text substitutions** from the Text toolbar.

The Text Substitutions dialog is displayed.

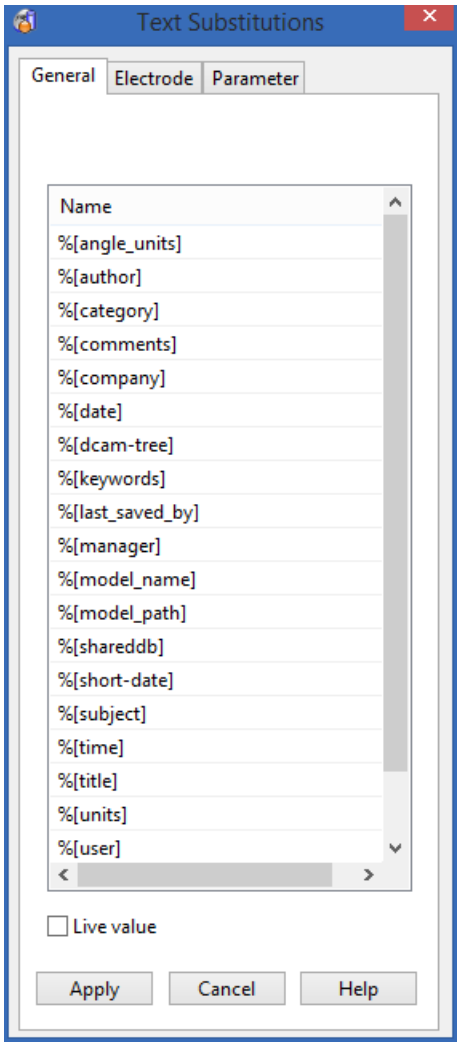

6 Click the **Electrode** tab.

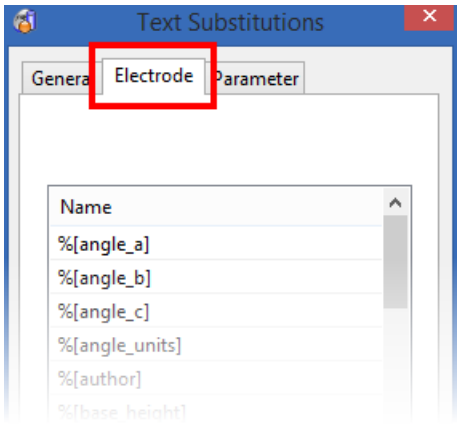

7 Scroll the list and click **%[user]**.

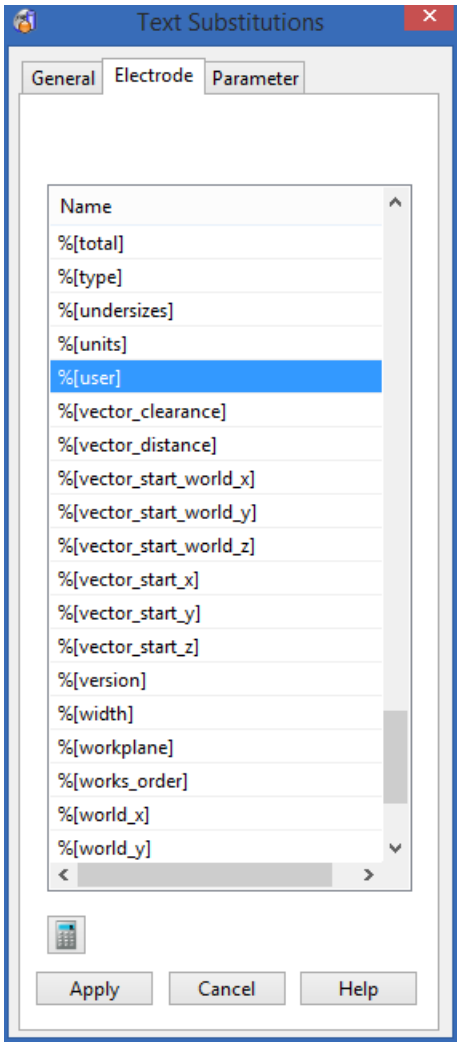

8 Click **Apply**.

The code is displayed on the drawing.

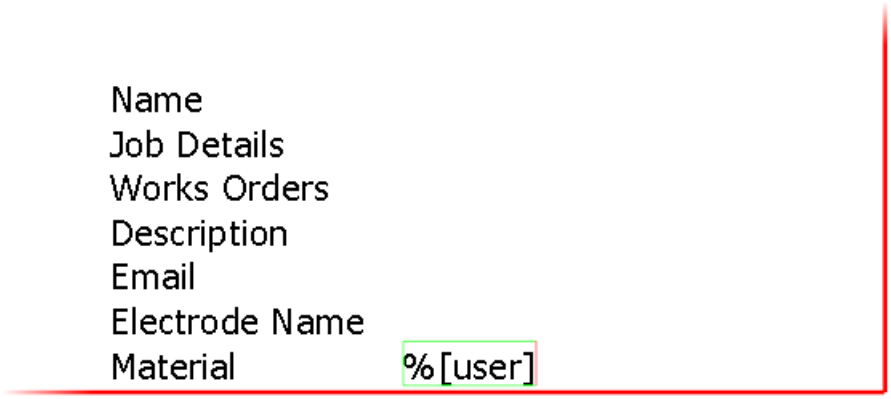

9 Move back to the drawing, make sure the cursor is at the end of the active text box.

10 Press **Enter**.

The value of user is automatically filled in and it is taken from the user login account. The other values will be filled in when an electrode is created.

11 Repeat the last 3 steps for the following:

%[job_detail] (Press **Enter**.)

%[works_order] (Press **Enter**.)

%[description] (Press **Enter**.)

%[detail4] (Press **Enter**.)

%[electrode_name] (Press **Enter**.)

%[material]

%[electrode_name] is one of a number of strings that can be added to a template. For further details, see the Electrode reference help.

12 Your drawing should like the image shown below:

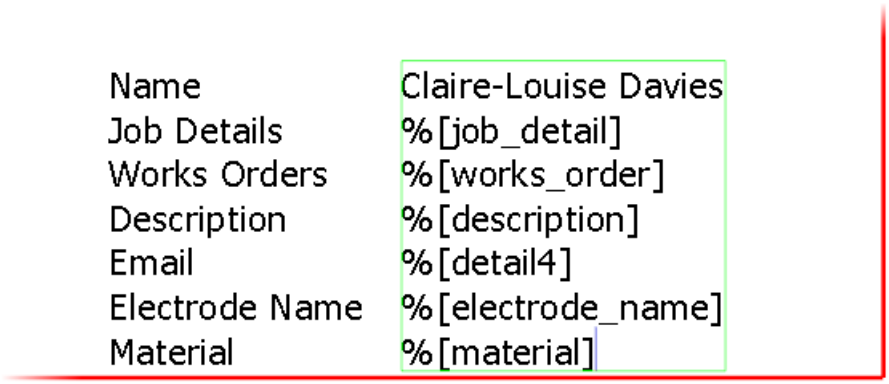

13 Click **Cancel.**

14 Click **Select** .

15 Click anywhere in the graphics window to deselect the model.

15. Create a border for the text

1 Click **Line** .

2 Click **Continuous Lines** .

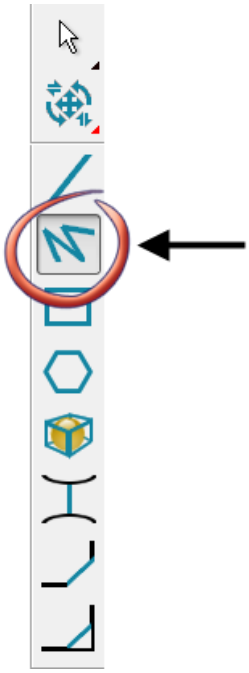

3 Click in the **Command Input** box in the **Status Bar** and type:

540 (Press **Enter**.)

0 118 (Press **Enter**.)

300 (Press **Enter**.)

4 Click **Select** .

5 Click anywhere in the graphics window to deselect the model.

Two lines are created, shown in the image below.

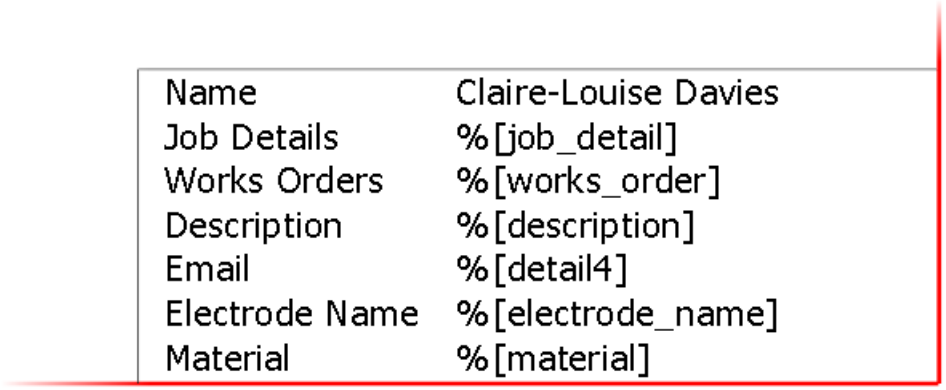

Name	Claire-Louise Davies
Job Details	%[job_detail]
Works Orders	%[works_order]
Description	%[description]
Email	%[detail4]
Electrode Name	%[electrode_name]
Material	%[material]

6 Click the horizontal line, shown in the image below:

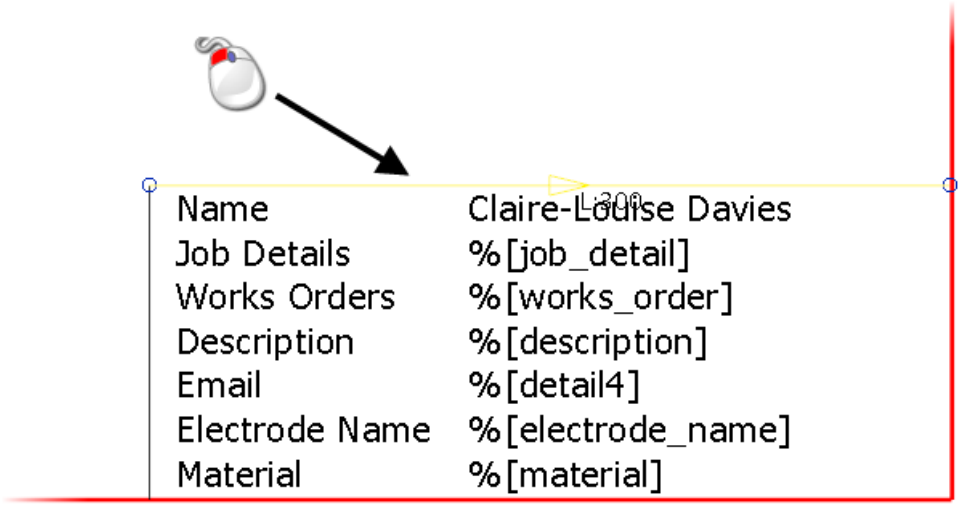

7 Click **Show General Edits Options** .

Keep clicking the button until the toolbar shown below is displayed.

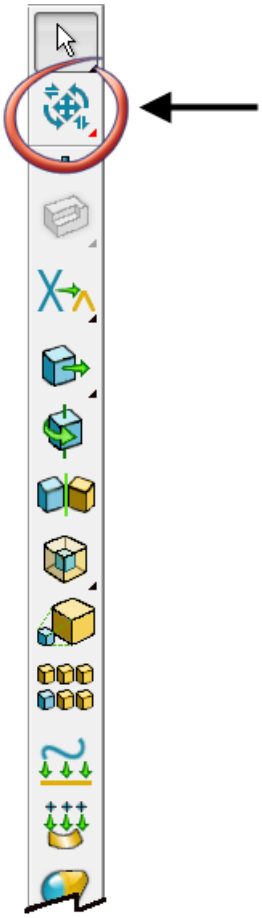

8 Click **Move/copy items** .

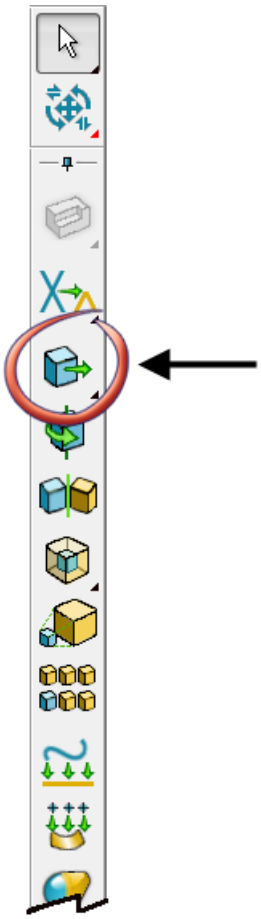

The **Move** toolbar is displayed.

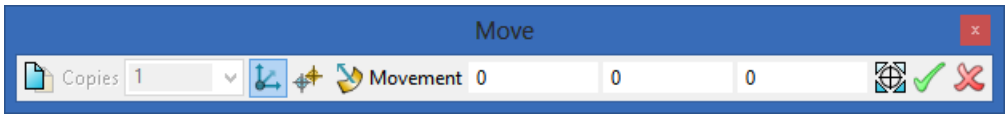

9 Click **Keep Original** .

10 Enter **6** copies.

11 Enter **-17** in the **Y** Axis.

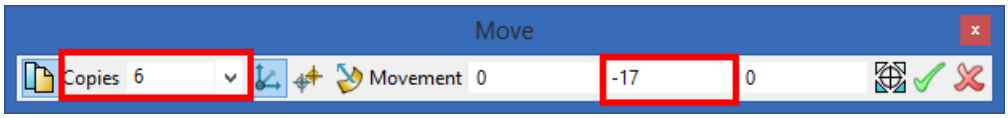

12 Click **Apply** .

13 Click **Dismiss** .

Your drawing should look like the image shown below:

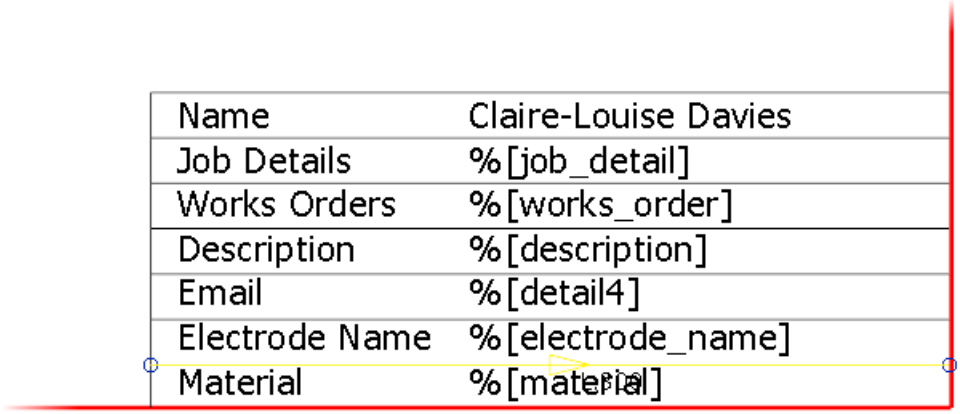

14 Click the vertical line, shown below:

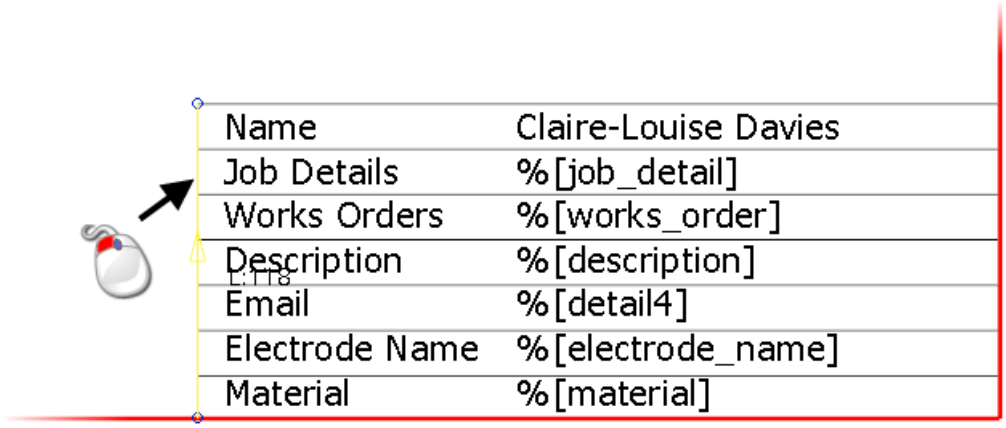

15 Click **Move/copy items** .

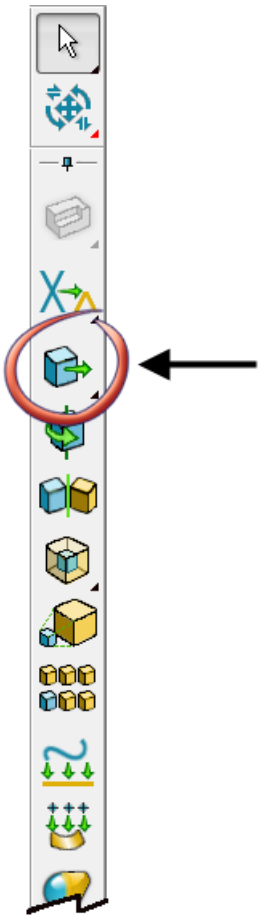

The **Move** toolbar is displayed.

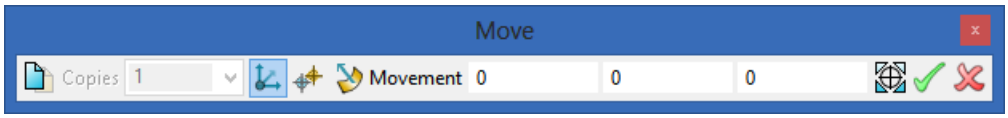

16 Click **Keep Original** .

17 Enter **1** copy.

18 Enter **110** in the **X** Axis.

19 Click **Apply** .

20 Click **Dismiss** .

21 Click anywhere in the graphics window to deselect the model.

Name	Claire-Louise Davies
Job Details	%[job_detail]
Works Orders	%[works_order]
Description	%[description]
Email	%[detail4]
Electrode Name	%[electrode_name]
Material	%[material]

16. Add a view

1 Click **View** .

2 Click **Single View** .

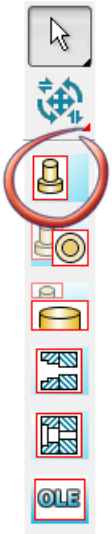

3 Click to position the view, shown in the image below:

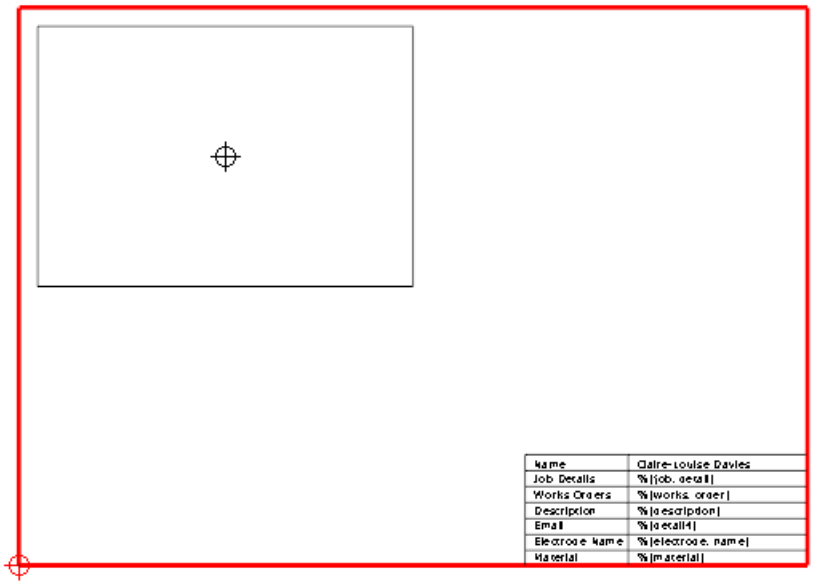

4 Click on the view using the right mouse button.

5 Select **Modify**.

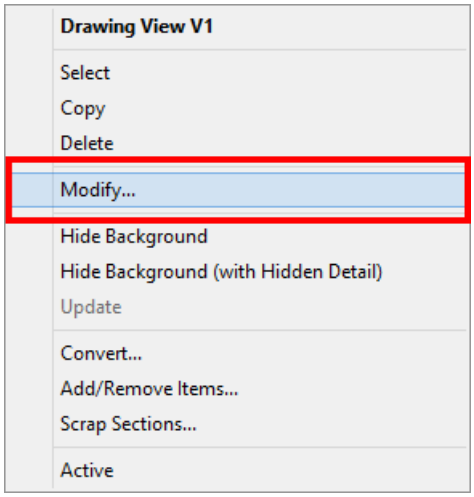

The Edit View dialog is displayed.

6 Do the following:

① Change the **Direction** to **Isometric**.

② Change the **Detail** to **Dynamic Hidden**.

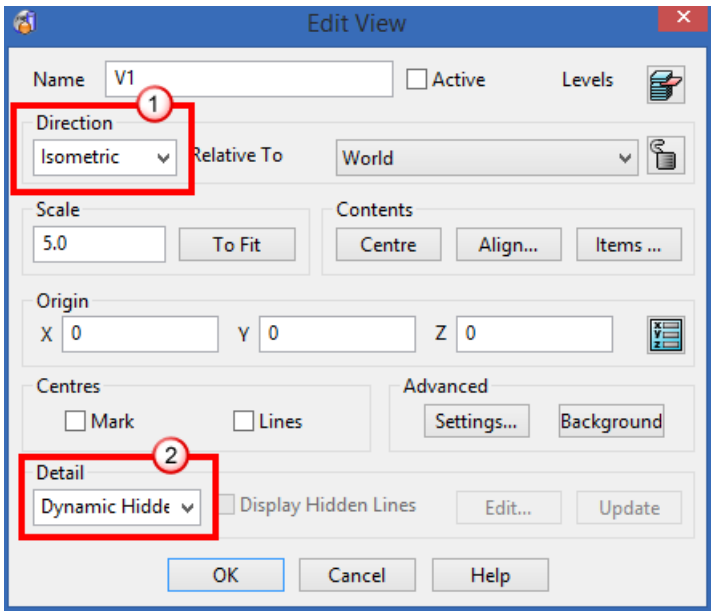

7 Click **OK**.

8 Click **Save model** .

The new drawing has now been created and saved in the **electrode_template** model.

9 Click **File** from the main menu.

10 Click **Close**.

17. Enter additional details in the wizard

1 Click **Import Data (Electrode_17.psmodel)**.

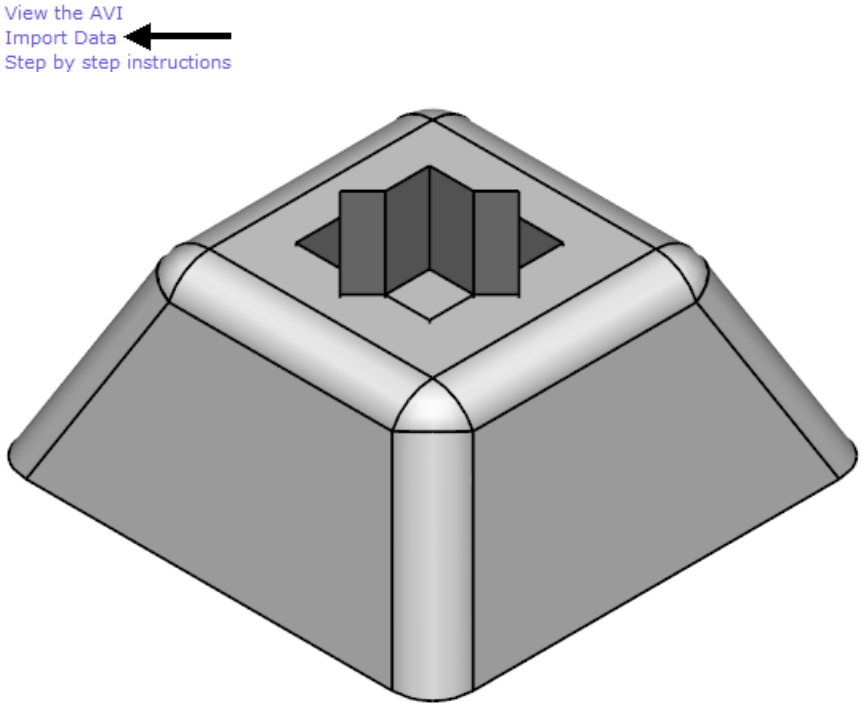

2 Click **Create an electrode** .

The **Electrode Wizard** is displayed.

3 Click the concave area shown in the image below.

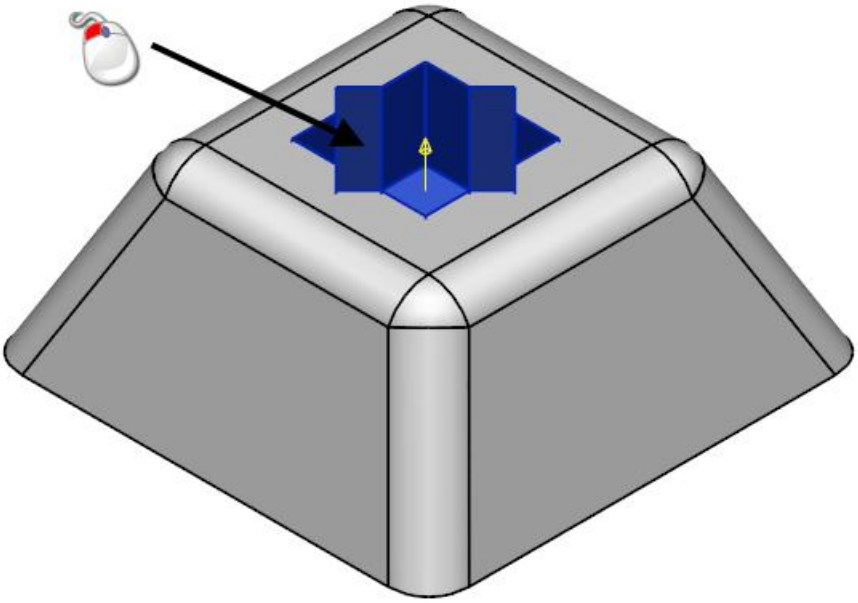

The selected area is displayed in the **Electrode Wizard**.

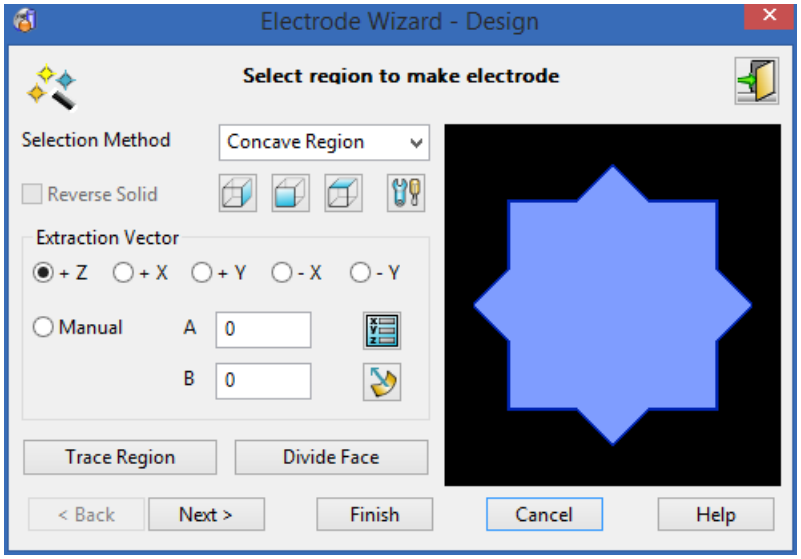

4 Click **Next**.

5 Do the following:

1. Change **Extension Distance** to **1**.
2. Change **Option** to **Normal to Edge**.
3. Change **Clearance Distance** to **5**.

④ Change **Position** to **Above Block**.

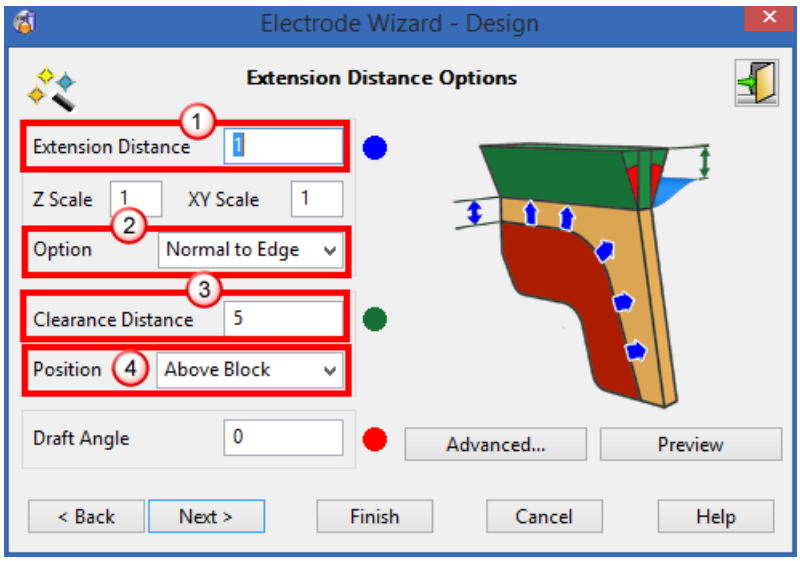

6 Click **Next**.

7 Do the following:

① Click **User Defined** from the drop-down list.

② Click **Type of Blank** to display a circle.

③ Enter a **Diameter** of **24.**

④ Click on **Lock Height** to unlock it.

⑤ Enter a **Height** of **22**.

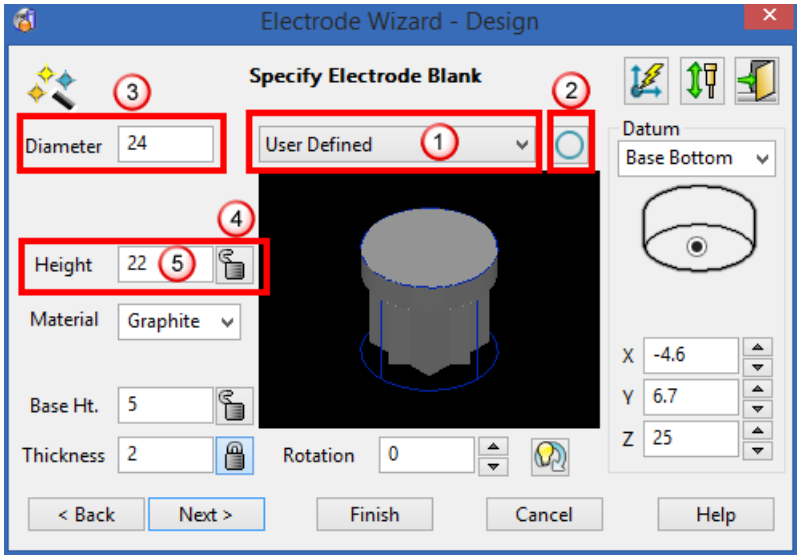

8 Click **Next**.

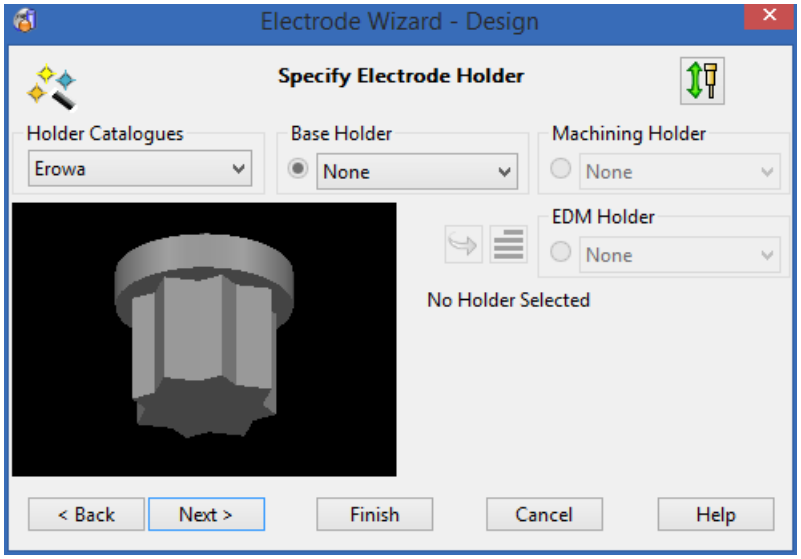

9 Click **Next**.

10 Do the following:

1. Select **Generate Setup Sheet**.
2. Click **Additional Options** ...

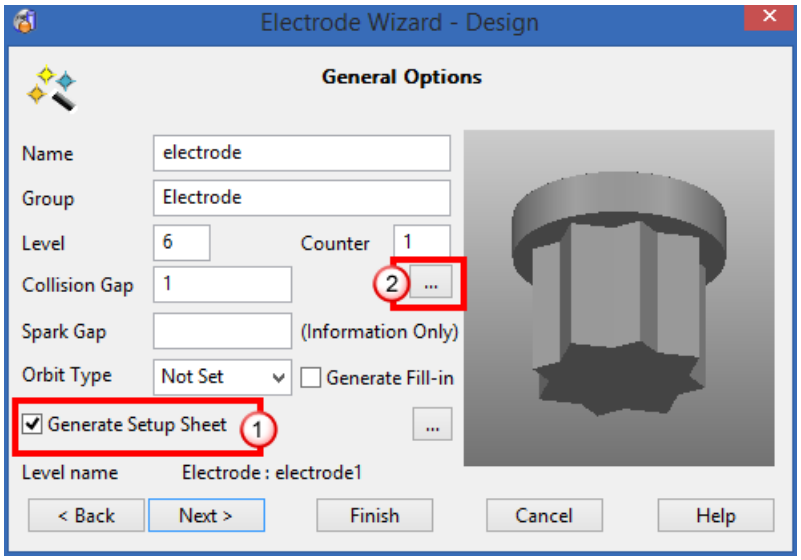

The Additional Electrode Details dialog is displayed.

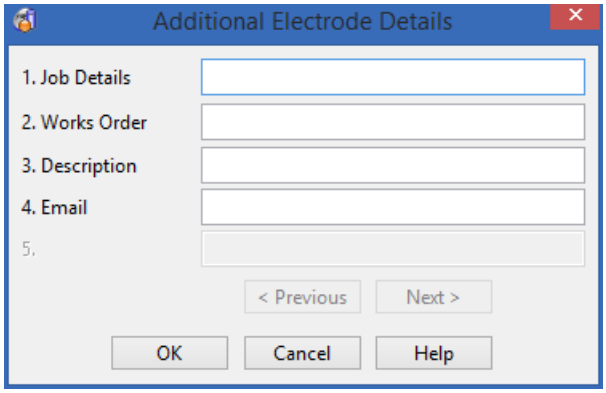

11 Enter the following details:

Job Details: **Electrode Star**

Works Order: **1001**

Description: **Create an Electrode**

Email: **delcam@delcam.com**

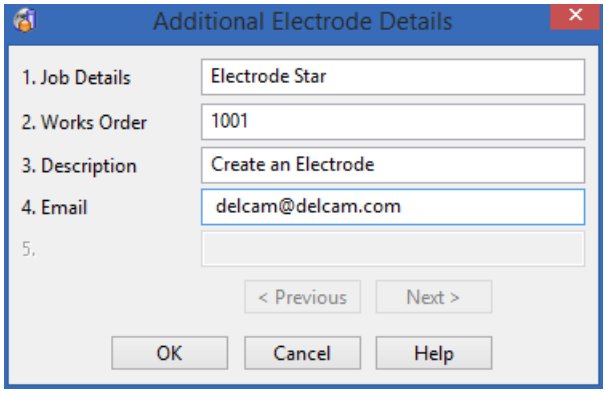

As **yes** was set in the **File properties**, the value for **Email** will be remembered and will become the default value.

12 Click **OK**.

18. Define custom setup sheets

1 Click **Raise setup-sheet control form** ...**.**

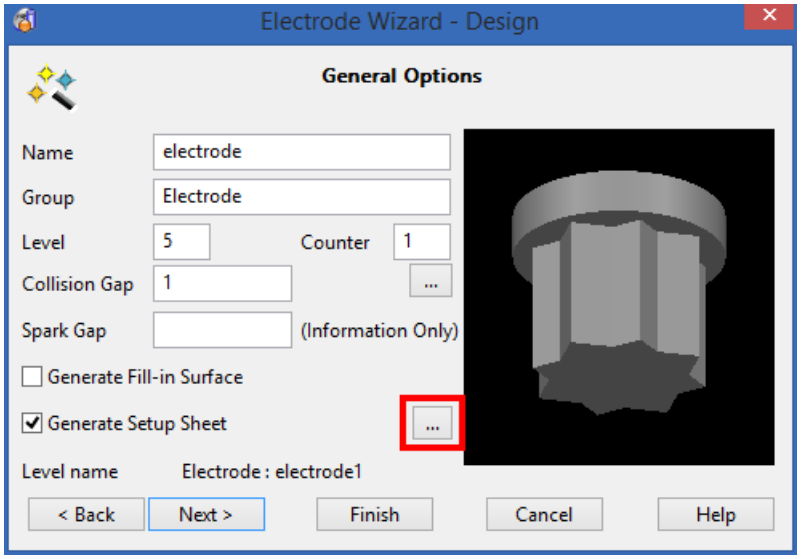

The Electrode Setup Sheet Control dialog is displayed.

2 Do the following:

① Click **One-off modification**, it is displayed unticked.

The changes will be stored in a file in the shareddb directory.

② Click **Detail Setup Sheet,** it is displayed ticked.

③ Click **Raise Setting Form** [...].

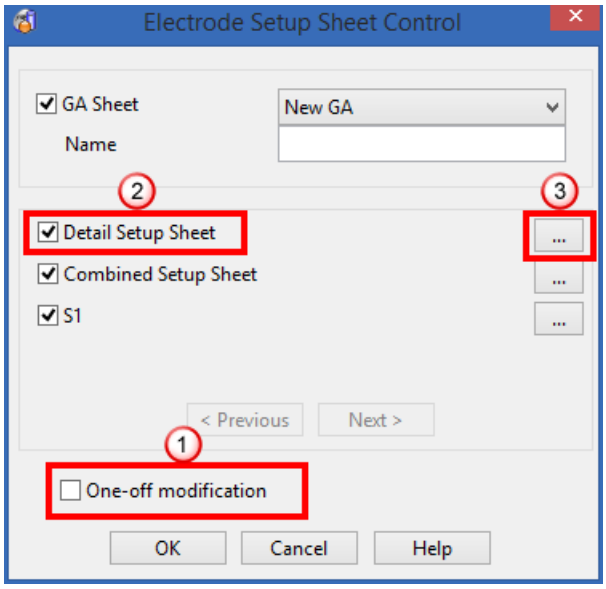

The Electrode Setup Sheet Settings dialog is displayed.

3 Do the following:

① Click **Show holders,** it is displayed ticked.

② Click **Resize to fit,** it is displayed ticked.

③ Click **Show part,** it is displayed ticked.

④ Click **Show balloon**, it is displayed ticked.

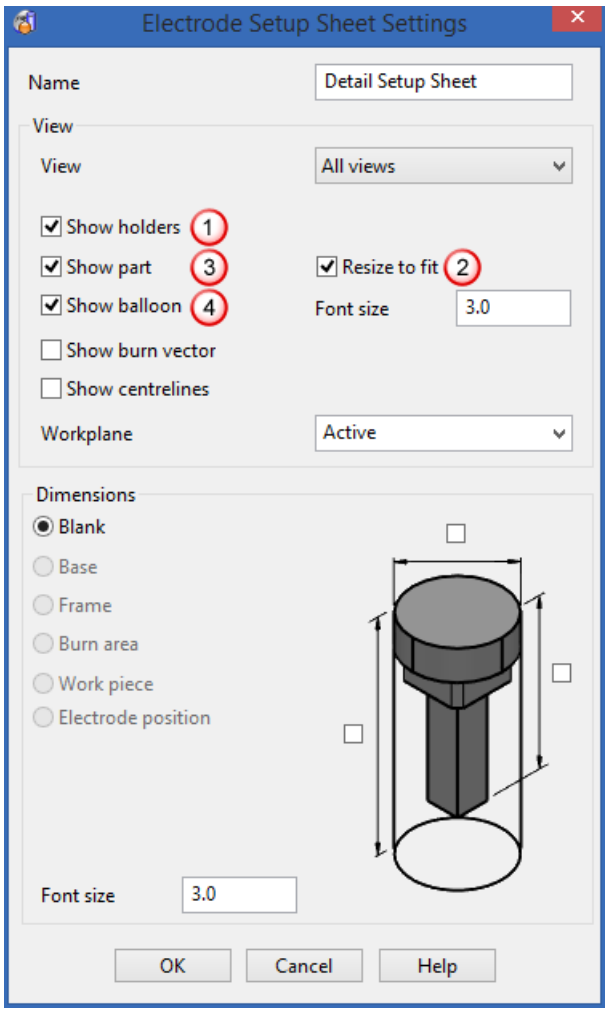

4 Click **OK**.

① Click **Combined Setup Sheet**, it is displayed ticked.

② Click **Raise Setting Form** ...

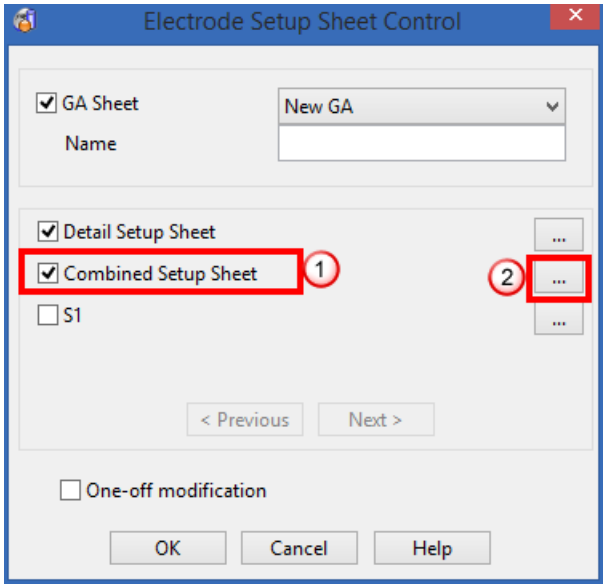

The Electrode Setup Sheet Settings dialog is displayed.

5 Do the following:

① Click **Show holders**, it is displayed ticked.

② Click **Resize to fit**, it is displayed ticked.

③ Click **Show balloon**, it is displayed ticked.

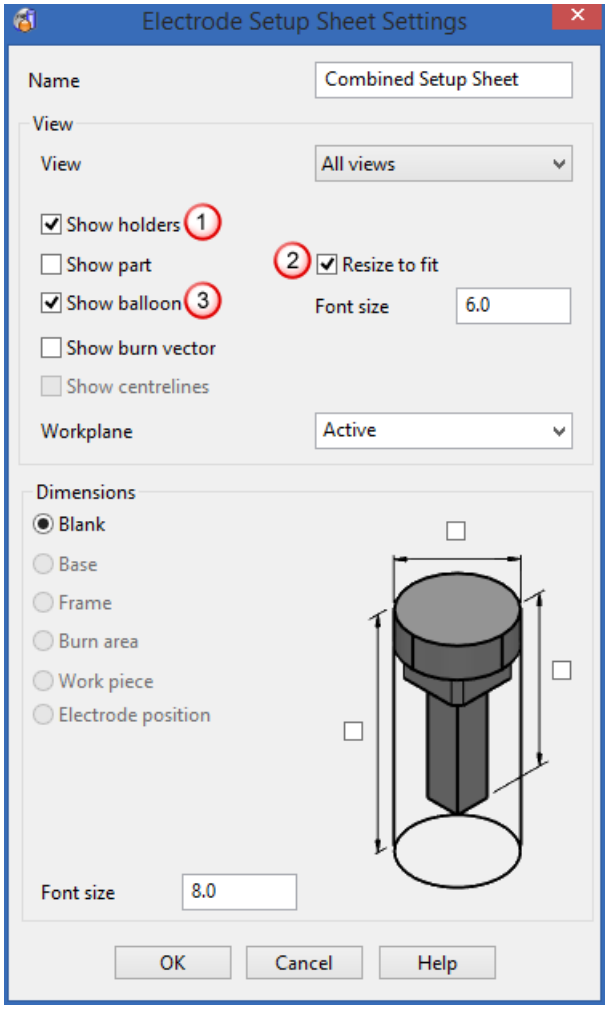

6 Click **OK**.

7 Click **S1**, it is displayed ticked.

8 Click **Raise Setting Form** ...

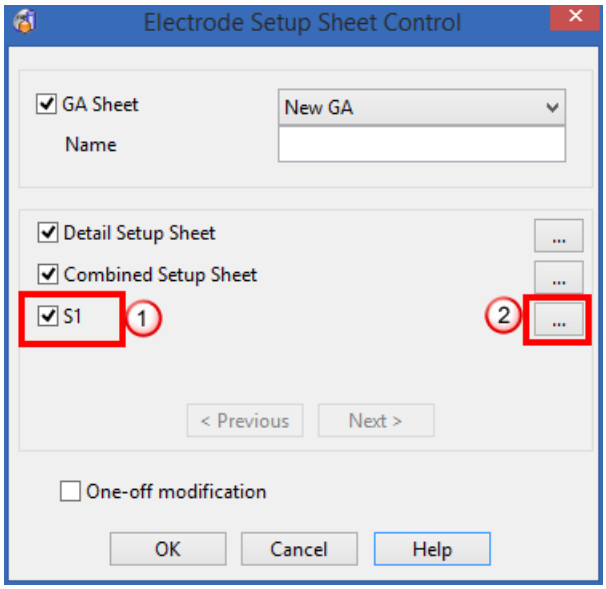

The Electrode Setup Sheet Settings dialog is displayed.

9 Do the following:

1. Click **Show holders**, it is displayed ticked.
2. Click **Resize to fit**, it is displayed ticked.
3. Click **Show balloon**, it is displayed ticked.
4. Enter **6** for the **Font size**
5. Enter **8** for the **Font size**
6. Click all the dimenions on the **Blank**, they are displayed ticked.

The dialog should look like the one shown below:

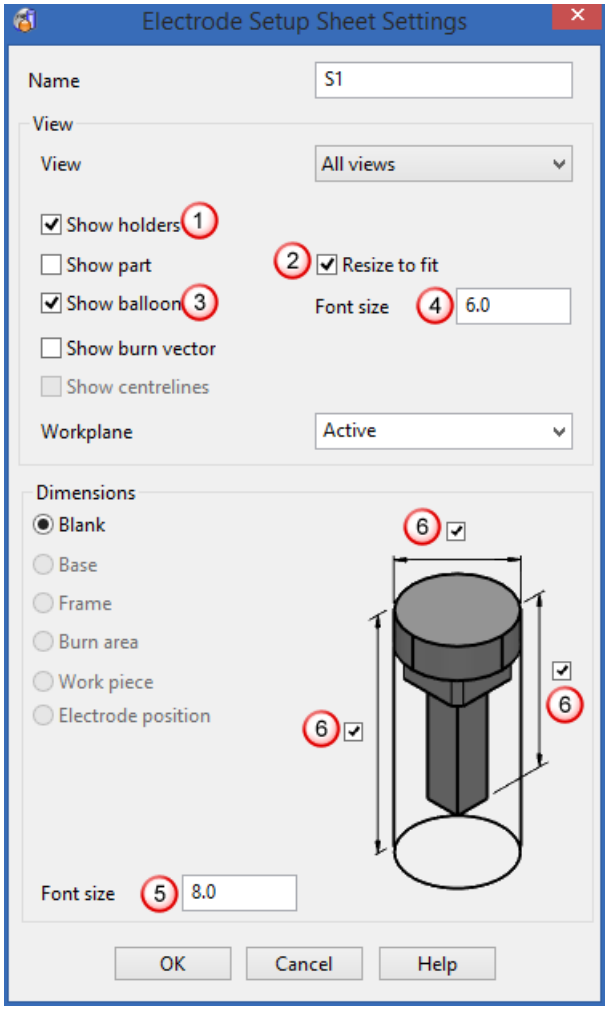

10 Click **OK.**

11 Click **OK.**

12 Click **Next.**

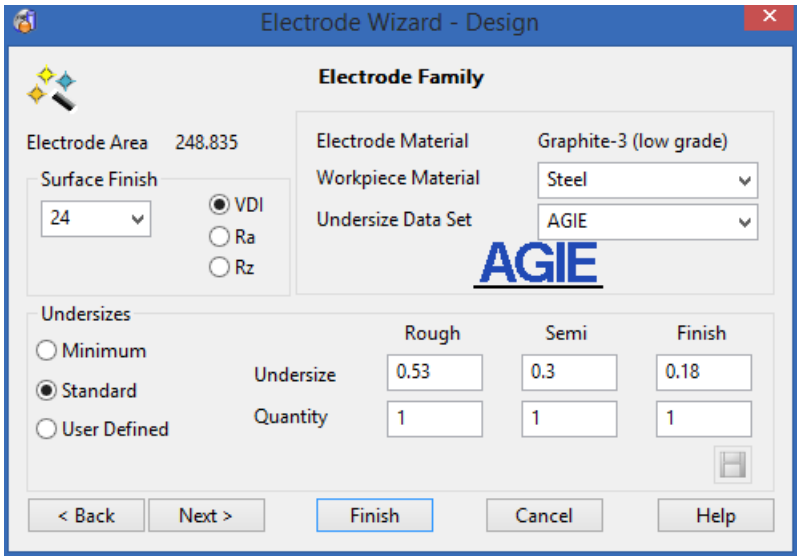

13 Click **Finish.**

14 Click **No**.

This generates the extra drawing sheet that was added to the **electrode_template**.

A dynamic hidden shaded isometric view of the electrode is automatically generated.

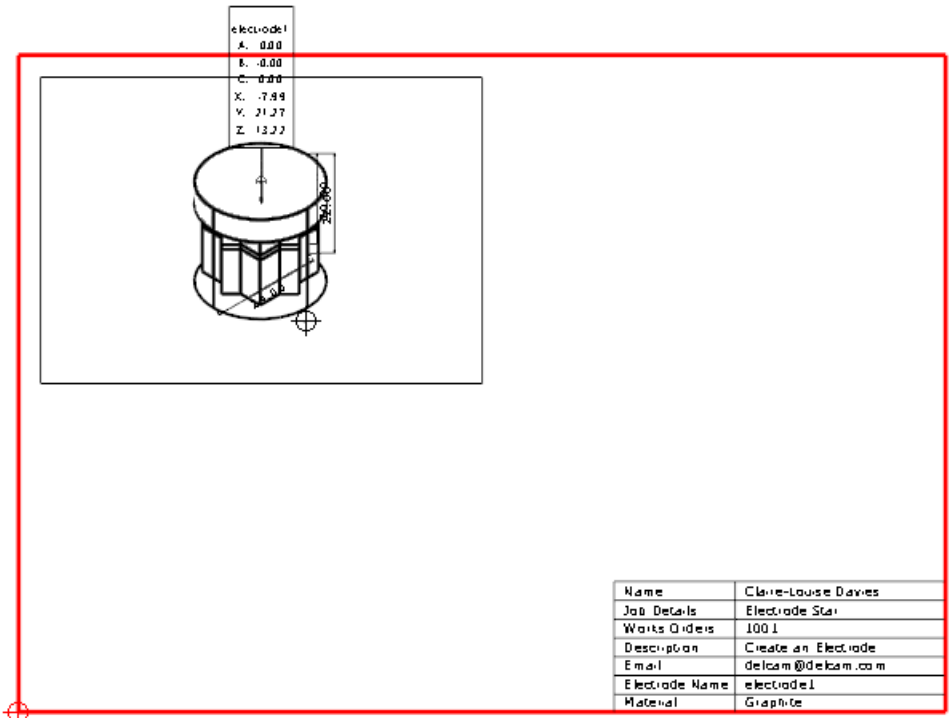

The text strings that were added to the template have also been filled in with the details of the electrode that has been created.

Name	Claire-Louise Davies
Job Details	Electrode Star
Works Orders	1001
Description	Create an Electrode
Email	delcam@delcam.com
Electrode Name	electrode1
Material	Graphite

19. Modify the setup sheet

1 Click **Switch to electrode model window** .

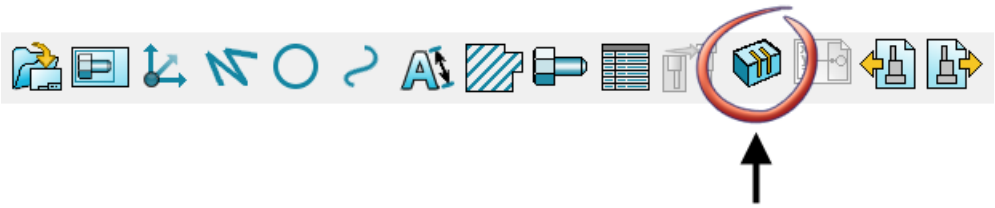

2 Click the electrode shown below:

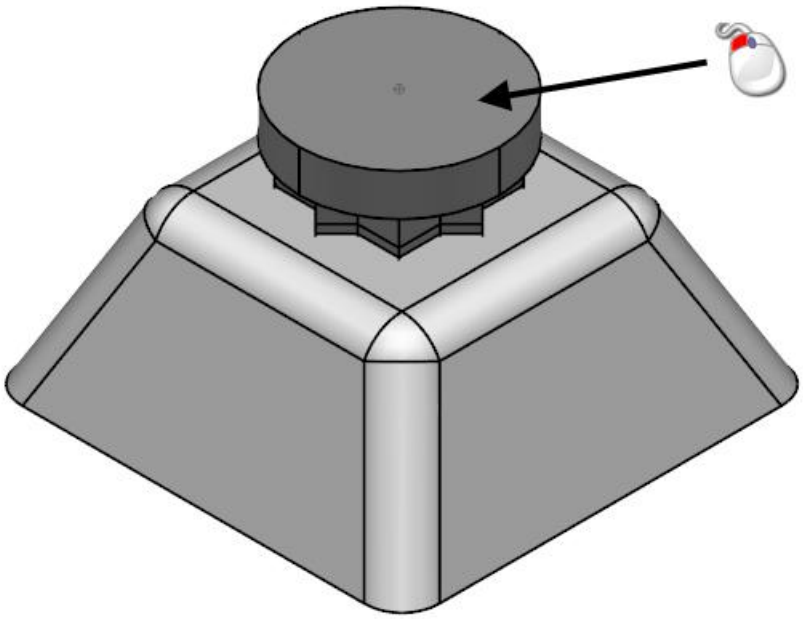

3 The electrode is selected.

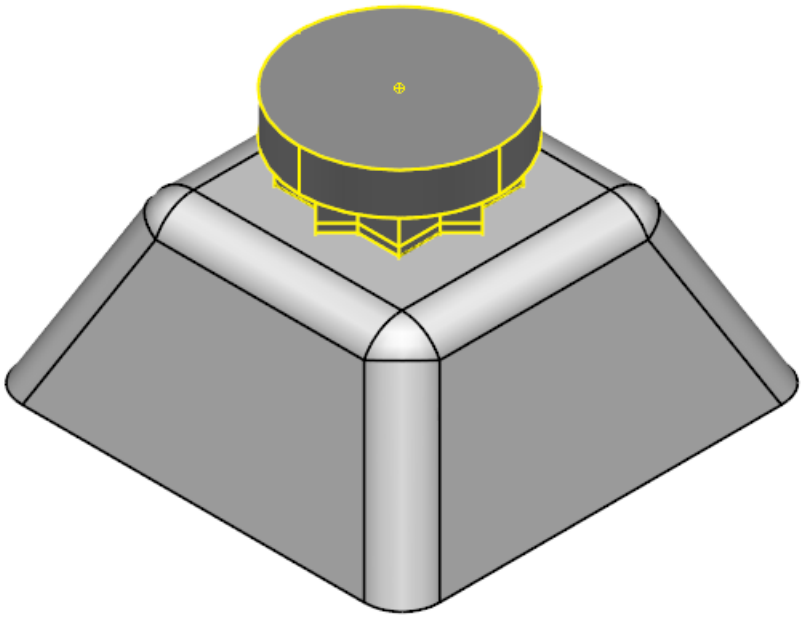

4 Click on the selected electrode using the right mouse button to display the popup menu.

5 Click **Modify**.

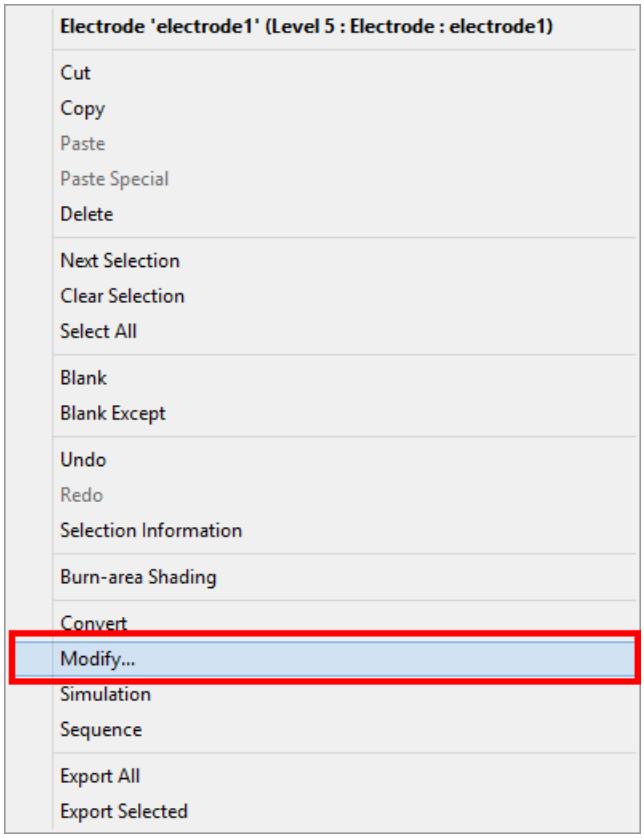

The Edit Electrode dialog is displayed.

6 Click **Raise setup-sheet control form** ...

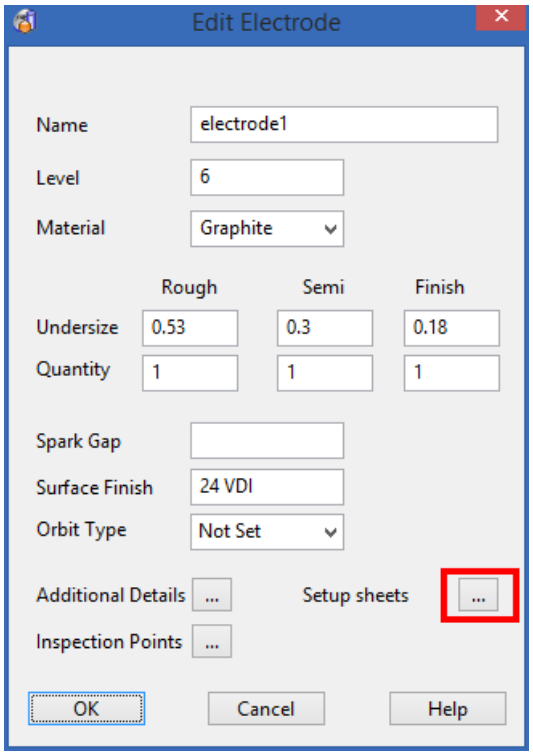

7 Click **Combined Setup Sheet**, it is displayed unticked.

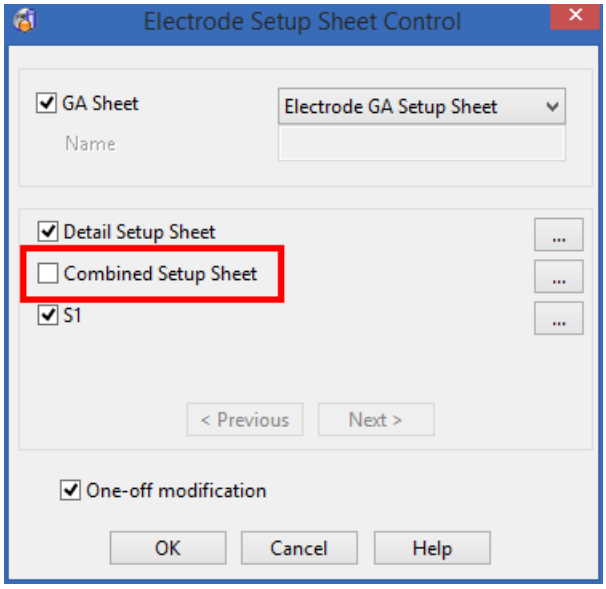

8 Click **Raise settings form** ... for the **S1** setup sheet.

9 Click **Show part**, it is displayed ticked.

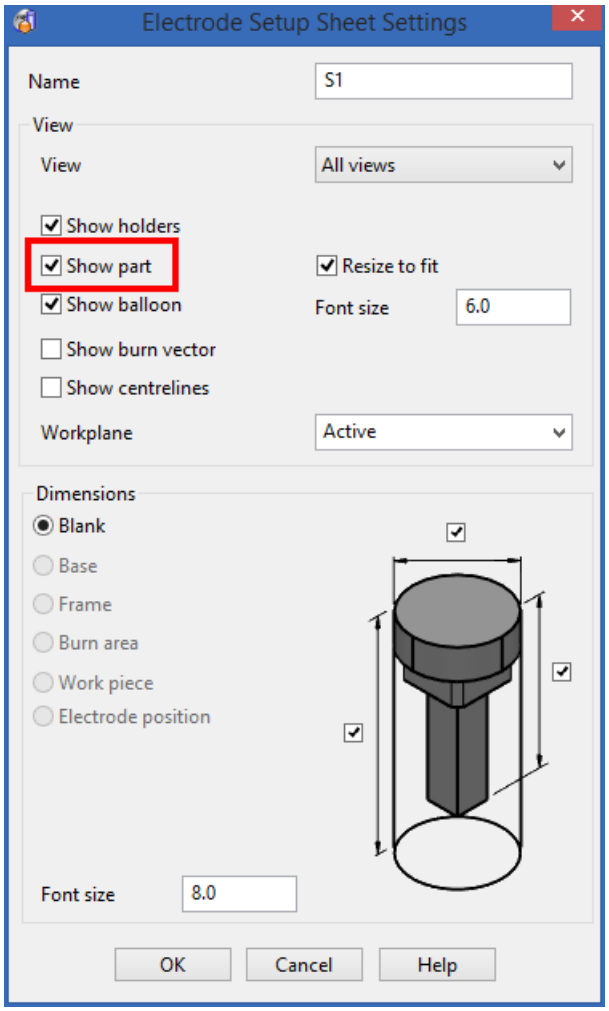

10 Click **OK**.

11 Click **OK**.

12 Click **OK**.

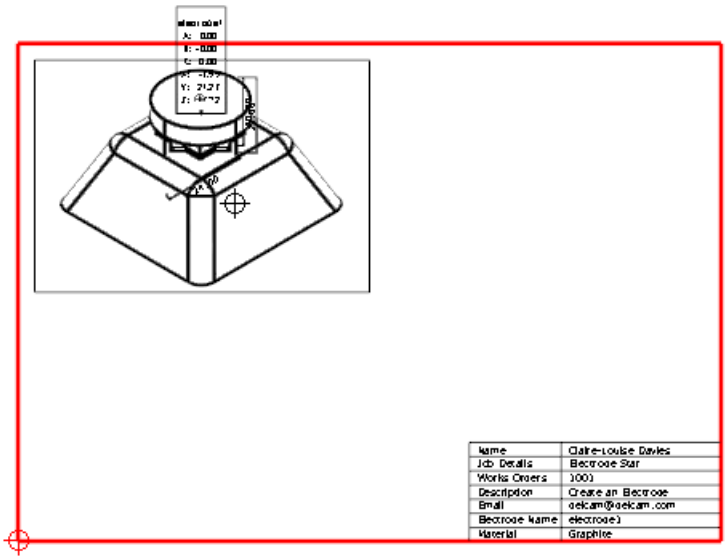

The setup sheets are generated again to reflect the changes.

13 Click **File** from the main menu.

14 Select **Close**.

15 Click **No**.

20. Tidy up the electrode_template model

Remove the drawing created by the tutorial from the **electrode_template** to reset the template to it's default setting.

1 Click **Open an existing Model** .

The **Open Model** dialog is displayed:

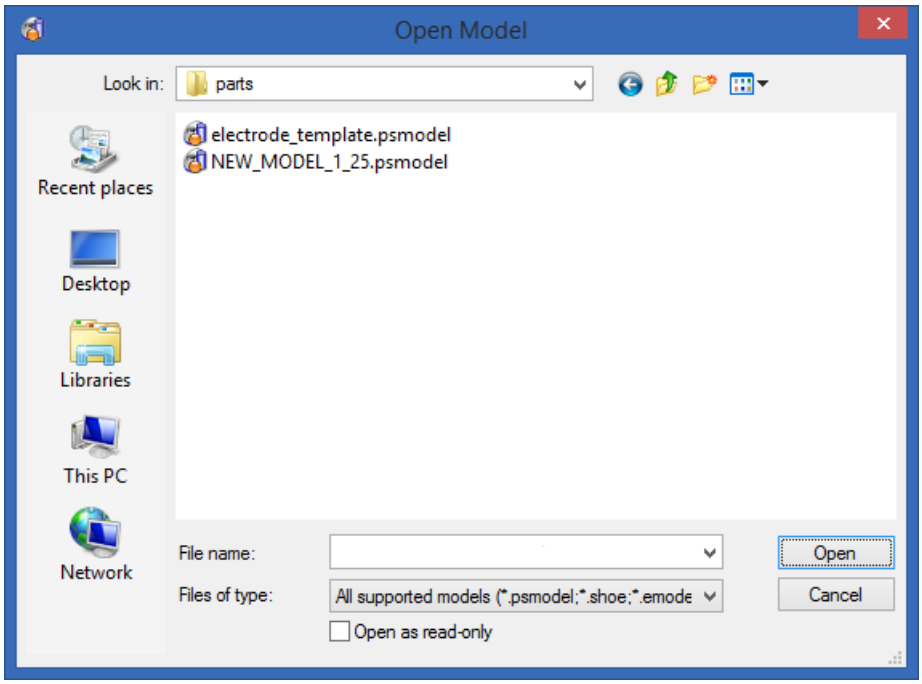

This **Open Model** dialog is displayed when you are working outside the shareddb.

The following **Open Model** dialog shown below is displayed when you are working inside the shareddb.

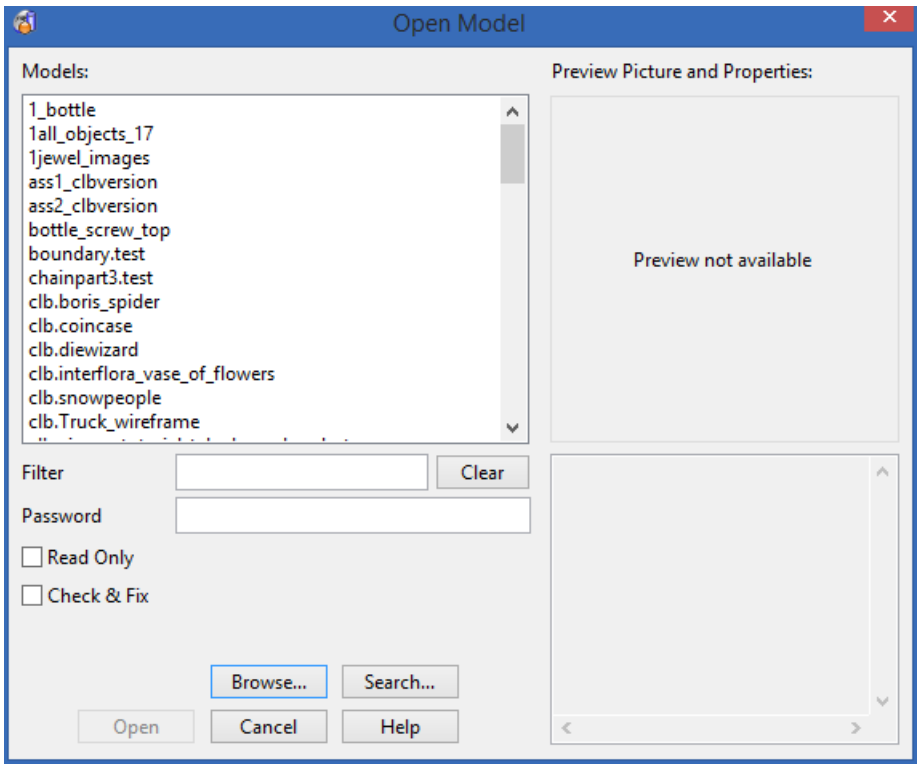

2 Browse to the following folder (based on the default install directories).

C:\Users\Public\Public Documents\Delcam\parts

3 Click **electrode_template**.

4 Click **Open**.

The example template **S1** is going to be deleted from the **electrode_template** model.

5 Click **Modelling Mode** using the right mouse button.

6 From the flyout, click **Drafting Mode** .

The Drawing Selector dialog is displayed.

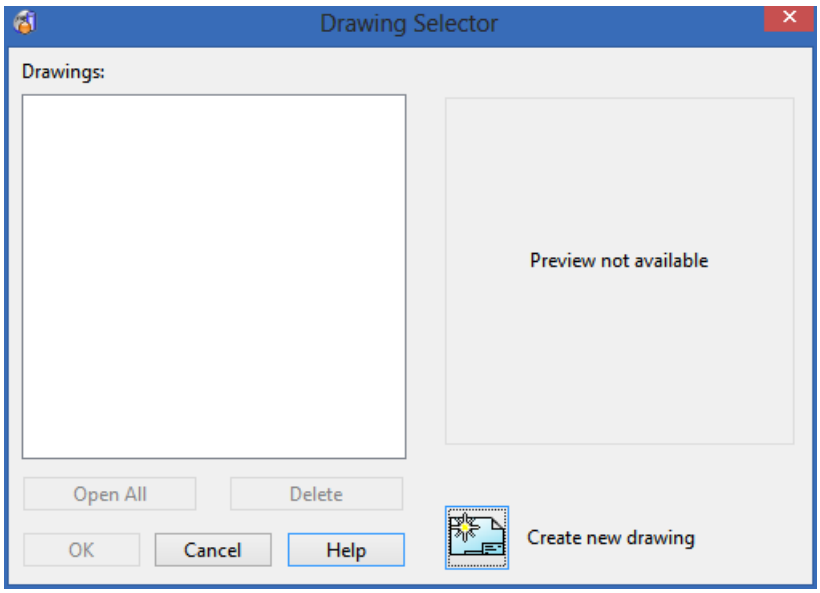

7 Click **S1**, shown in the image below:

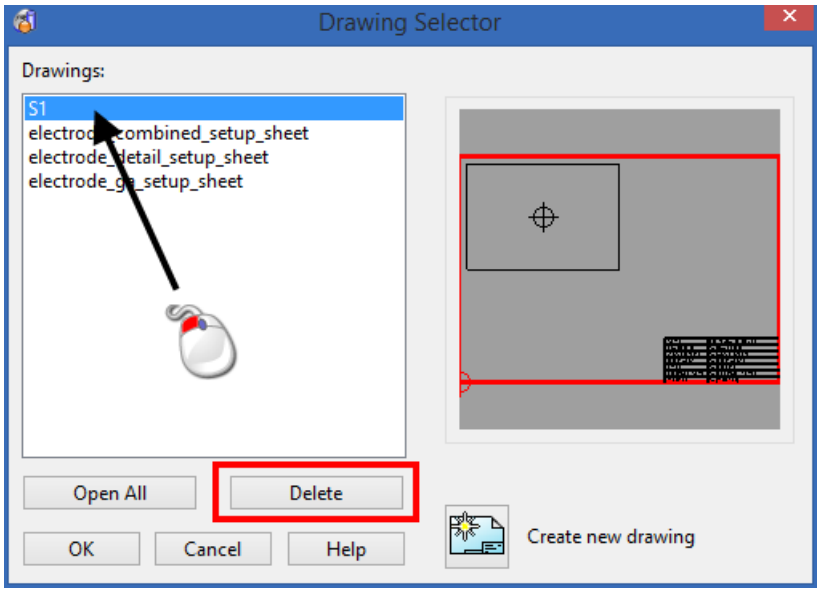

8 Click **Delete**.

9 Click **OK**.

10 Click **File** from the main menu.

11 Click **Close**.

12 Click **Yes** in the **Query** shown below.

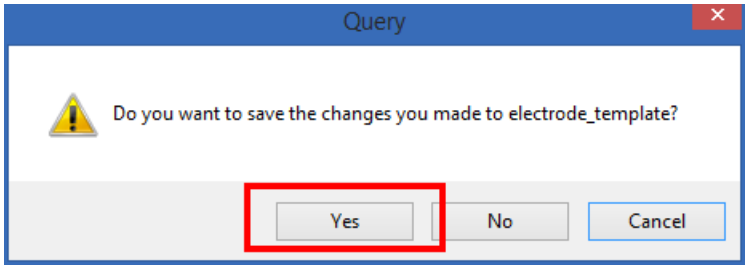

13 Click **Open new model** .

14 Click **Drafting Mode** using the right mouse button.

15 From the flyout, click **Modelling Mode** .

16 Click **Show General Edits Options** using the right mouse button.

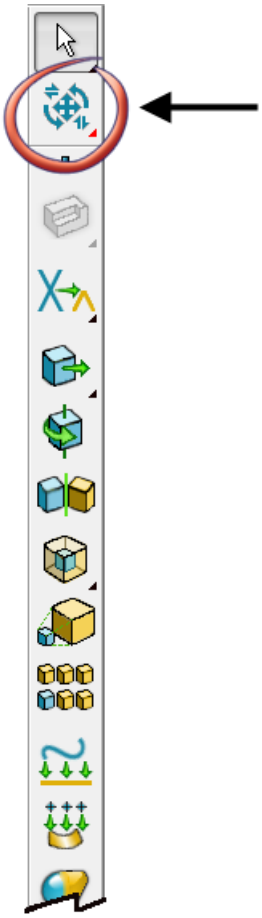

The **General Edits** options flyout is displayed.

17 Click **Show the model analysis options** .

The model analysis toolbar is displayed.

18 Click **Show model contents list** .

The File Properties dialog is displayed.

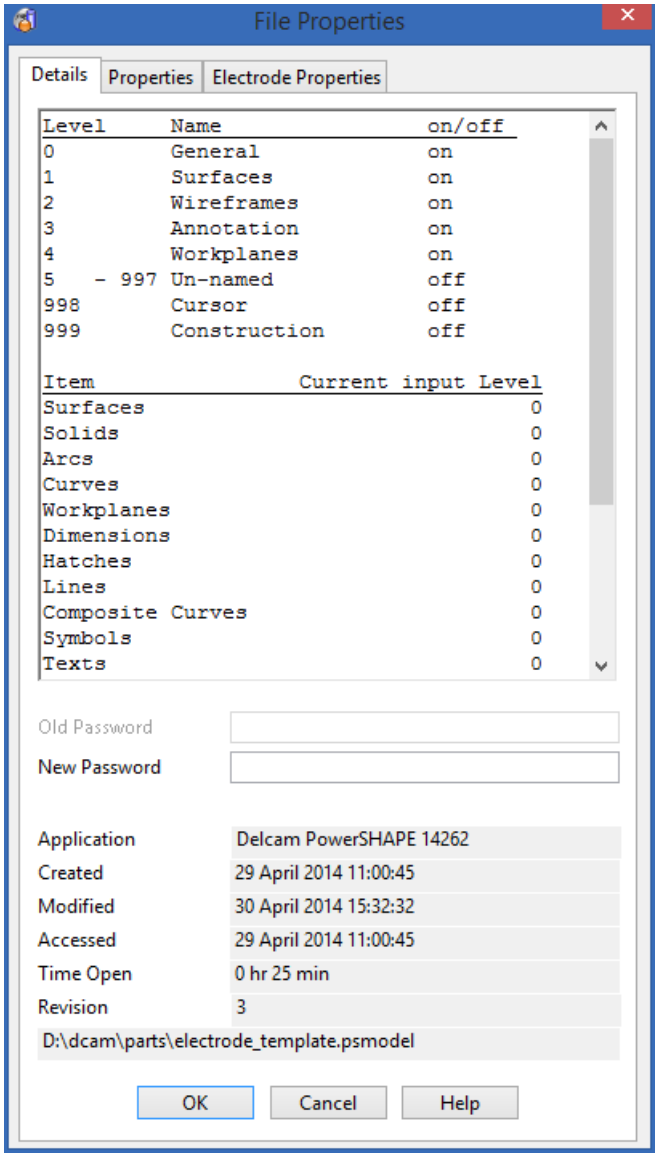

19 Click the **Electrode Properties** tab.

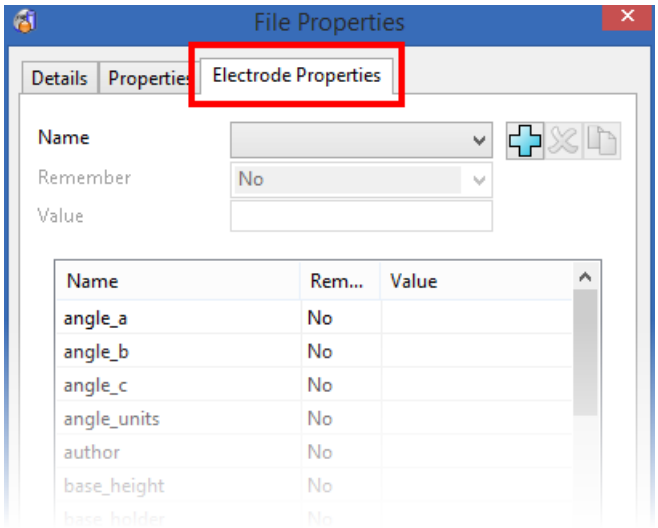

20 Click **detail4**.

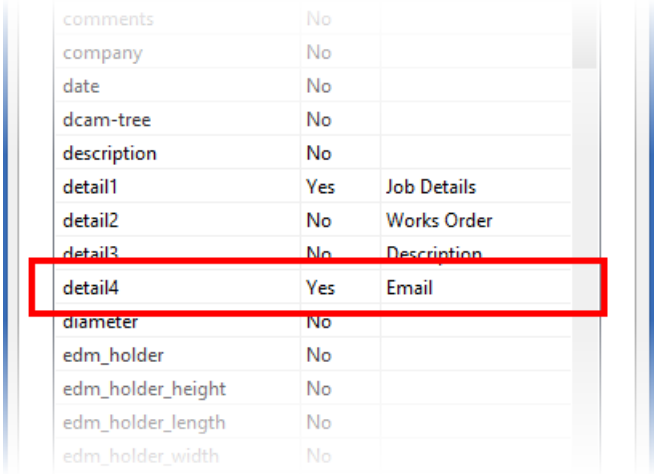

21 Click **Remove the electrode property** .

The additional text substitution string is removed.

22 Click **OK**.

23 Click **File** from the main menu.

24 Click **Exit** to close PowerSHAPE.

25 Using **Windows Explorer**, browse to the **shareddb** directory.

C:\Users\Public\Public Documents\Delcam\shareddb\

26 Delete the file **electrode_additional_details.con**.

27 Delete the file **electrode_setupsheets.con**.

The session options for the setup sheets will be reset to default.

28 Restart **PowerSHAPE**.

Adding a frame to an electrode

21. Change tools > options to add a frame

Add a frame using the options pages. The frame size is based on a reduced size or percentage of the blank dimensions.

An electrode frame is an offset section of the electrode base that is machined accurately to allow pre-setting of the electrode.

1 Click **Tools > Options** from the Main menu.

The Options dialog is displayed.

2 Click **Manufacturing > Electrode > Alignment.**

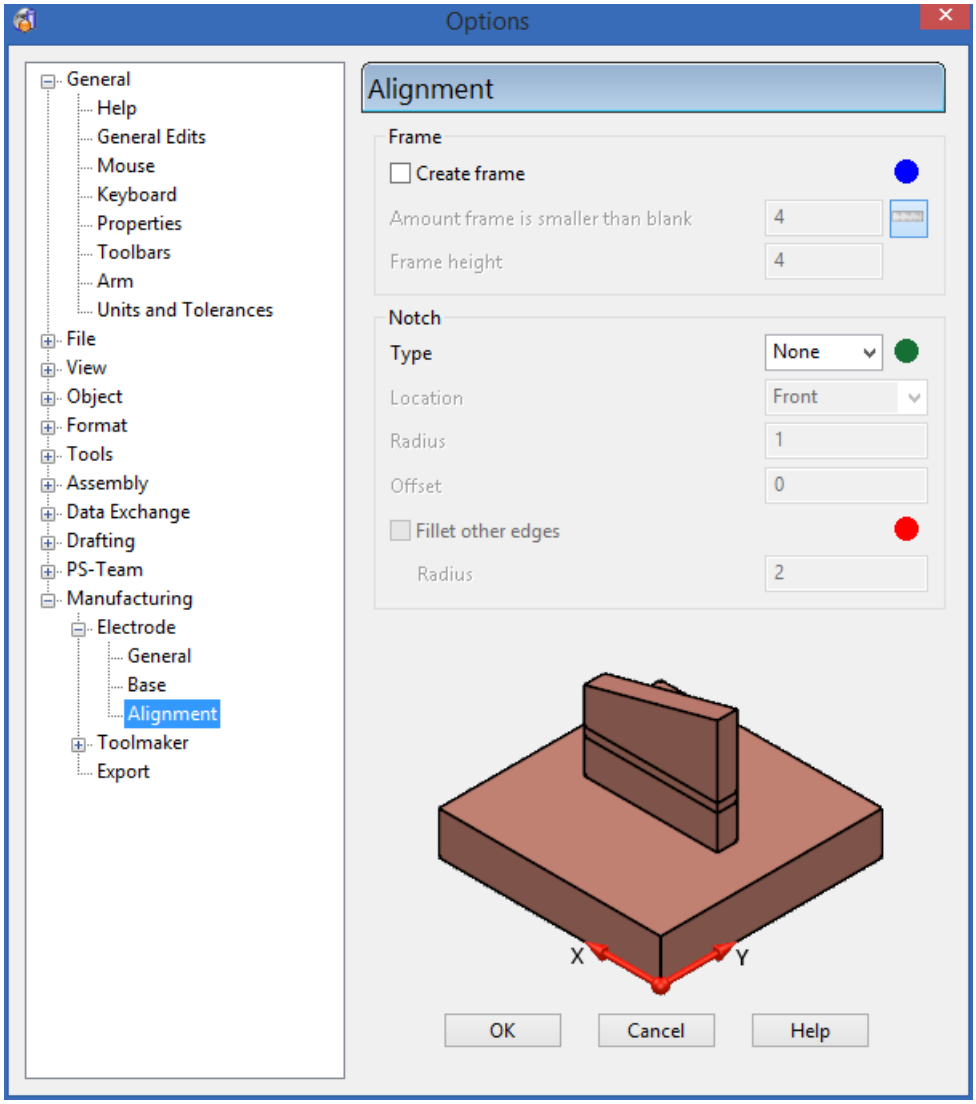

3 Click **Create frame**, it is displayed ticked.

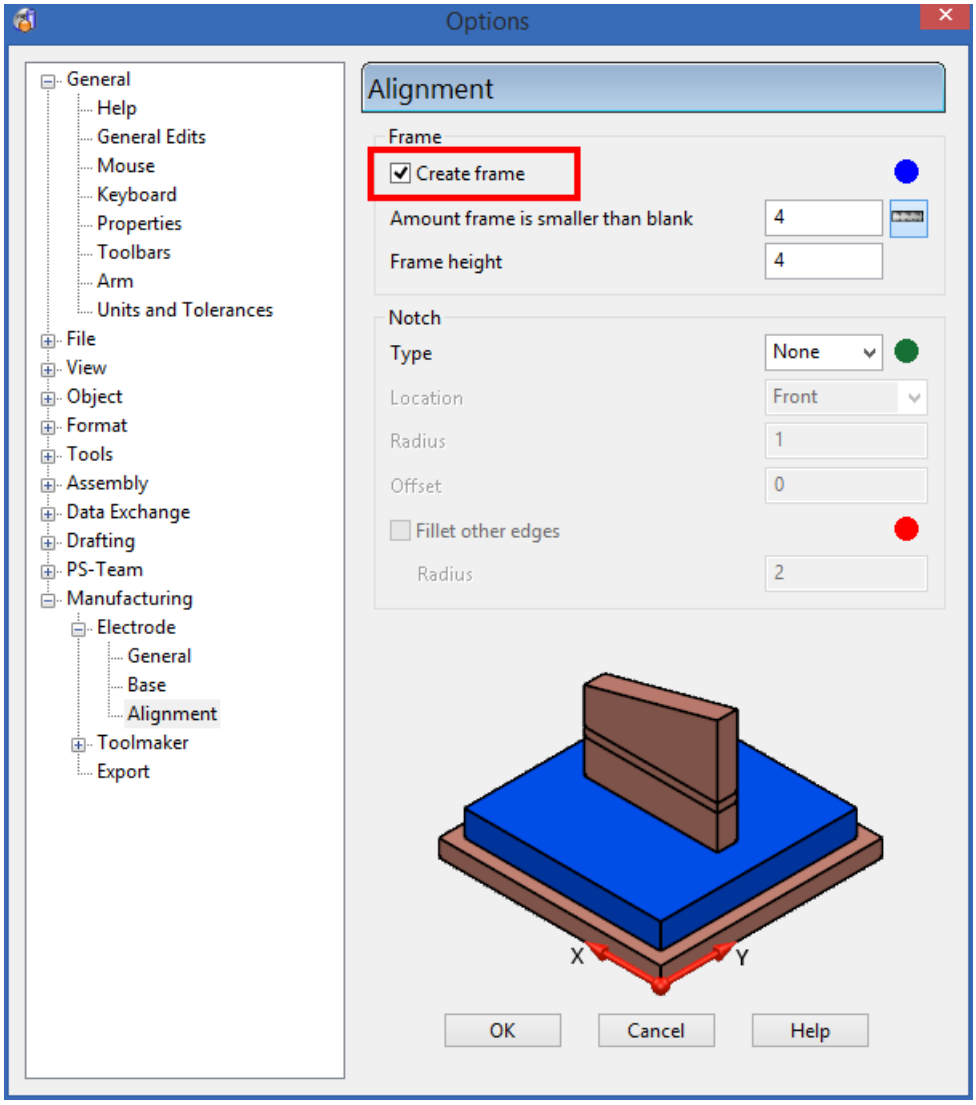

4 Click a **Type** of **Corner**.

5 Enter a **Length** of **4**.

The size is larger than necessary to visualise the chamfer on the model.

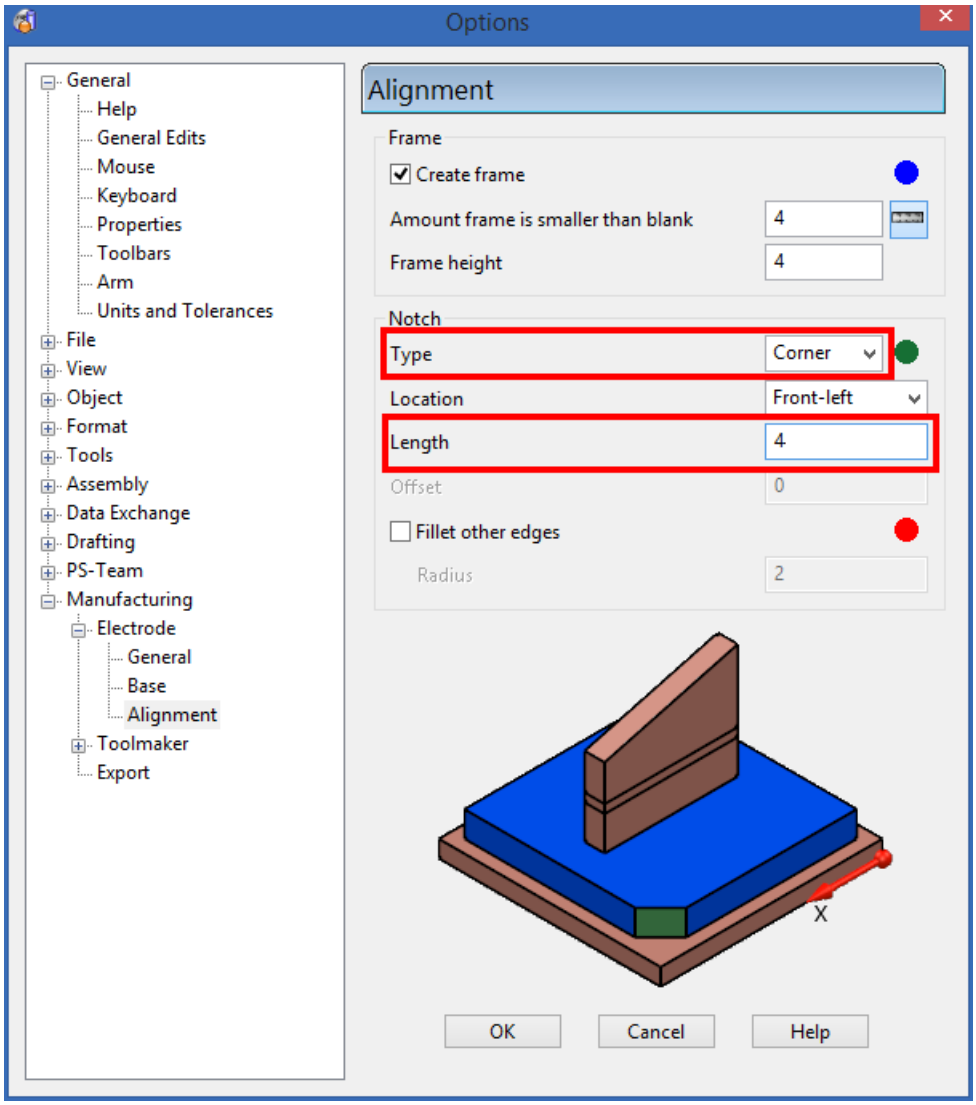

6 Click **OK**.

22. Create an electrode with a frame

1 Click **Import Data (Electrode_22.psmodel)**.

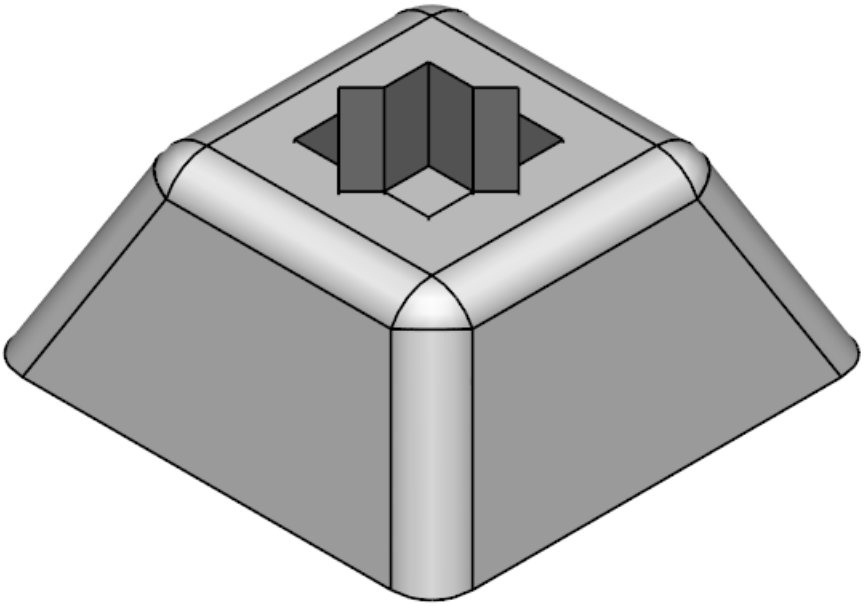

2 Click **Module**.

3 Click **Electrode**.

4 Click **Create an electrode** .

The **Electrode Wizard** starts.

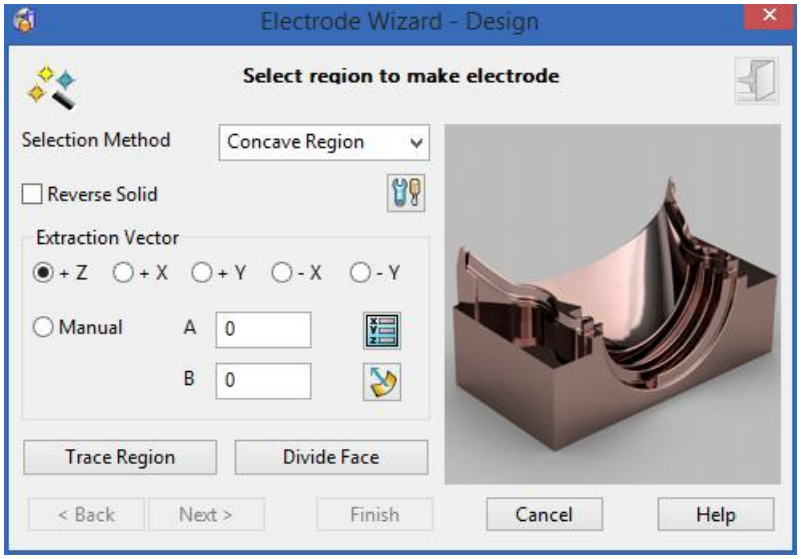

5 Click the face shown below:

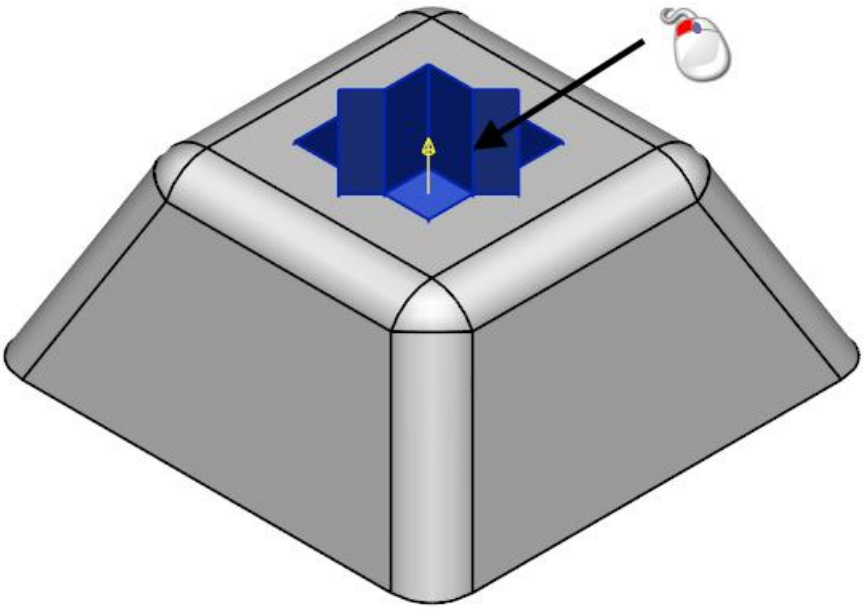

6 Click **Next**.

7 Click **Next**.

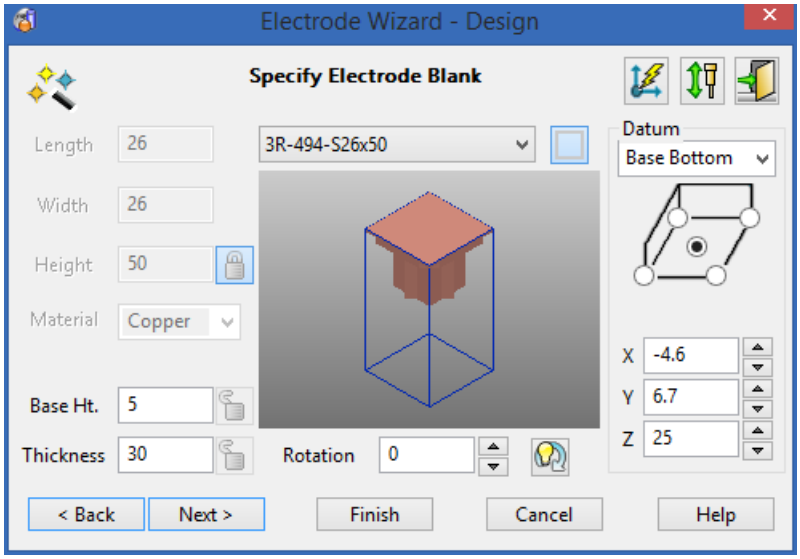

8 Click **Finish**.

9 Click **No** on the **Query** dialog.

10 Your model should look like the one shown below:

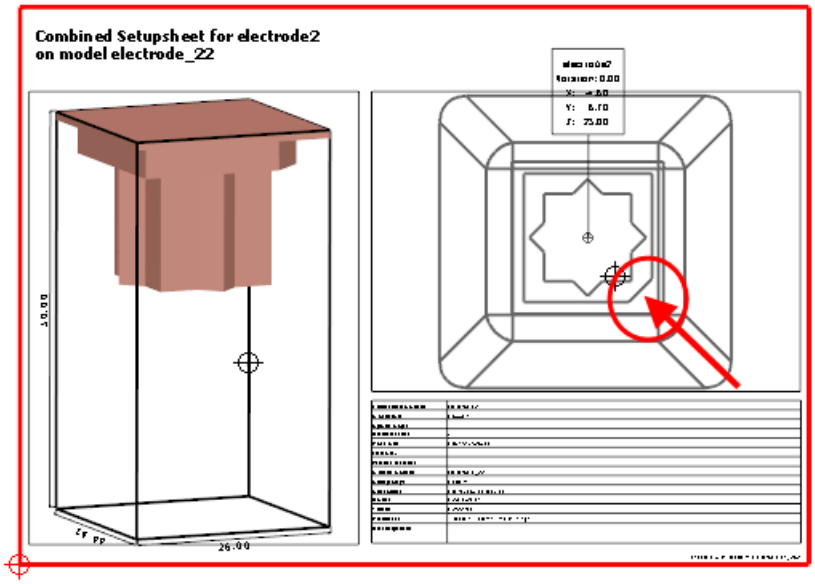

You can see the frame with oversized chamfer on the drawing.

11 Click **Switch to electrode model window** .

12 Click **File** from the main menu.

13 Click **Close**.

14 Click **No**.

23. Turn off frames

1 Click **Tools > Options** from the Main menu.

The Options dialog is displayed.

2 Click **Manufacturing > Electrode > Alignment**.

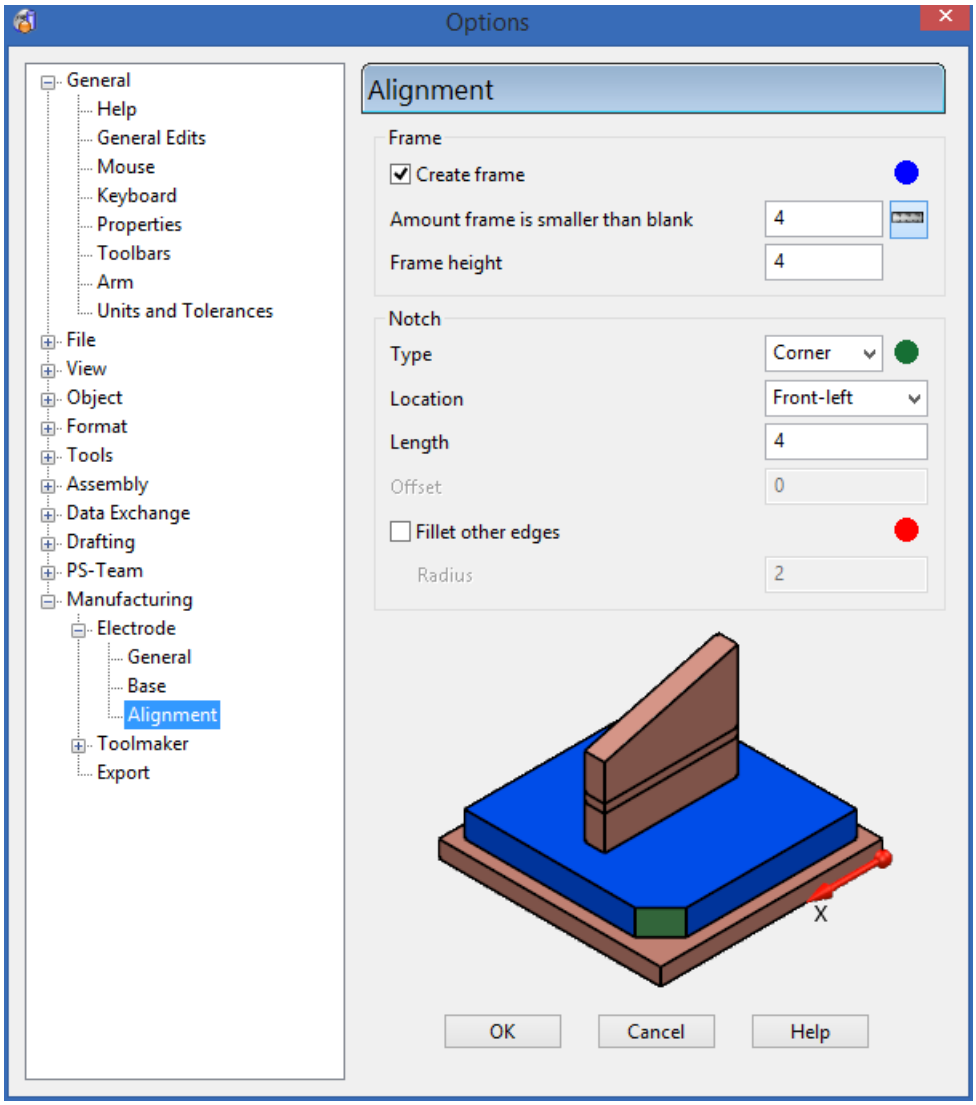

3 Click **Create frame** it is displayed unticked.

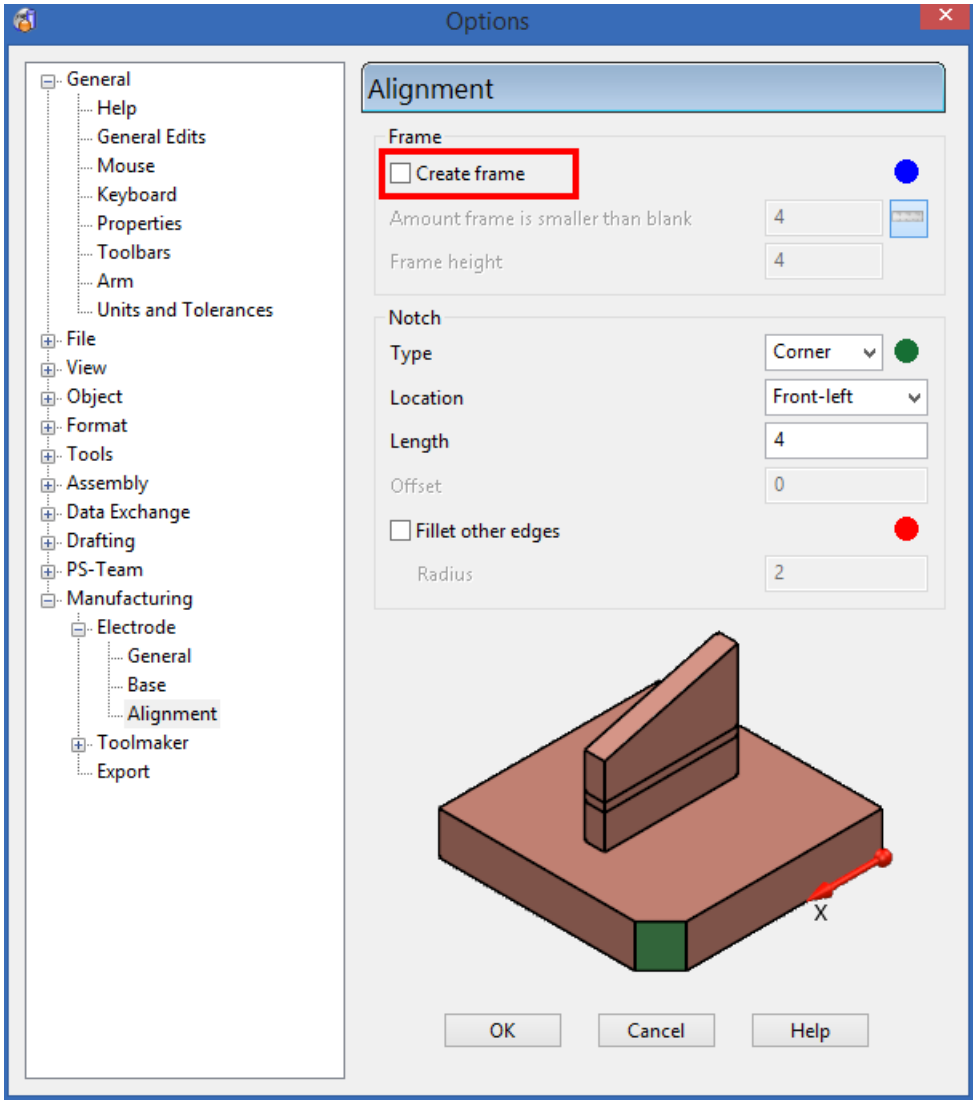

4 Click **OK**.

Adding blanks to the wizard

24. Add new blanks to the file blank.csv

New standard blanks can be added to the blank.csv file.

1 Using **Windows Explorer**, browse to the following folder:

C:\Program Files\Delcam\PowerSHAPEXXXXX\file\electrode

(where XXXXX is the version number of PowerSHAPE and C is the drive where PowerSHAPE is installed. This is the default install directory of the PowerSHAPE, yours may be different.)

2 Copy the file **blanks.csv** to the following folder:

C:\Users\Public\Public Documents\

Delcam\shareddb\

3 Use **WordPad**, or your preferred text editor, to open the following copied file:

blanks.csv

4 Highlight the line shown below:

0,3R-494-D50x50,50,,50,Copper,System_3R,__3R-Ready-to-Run

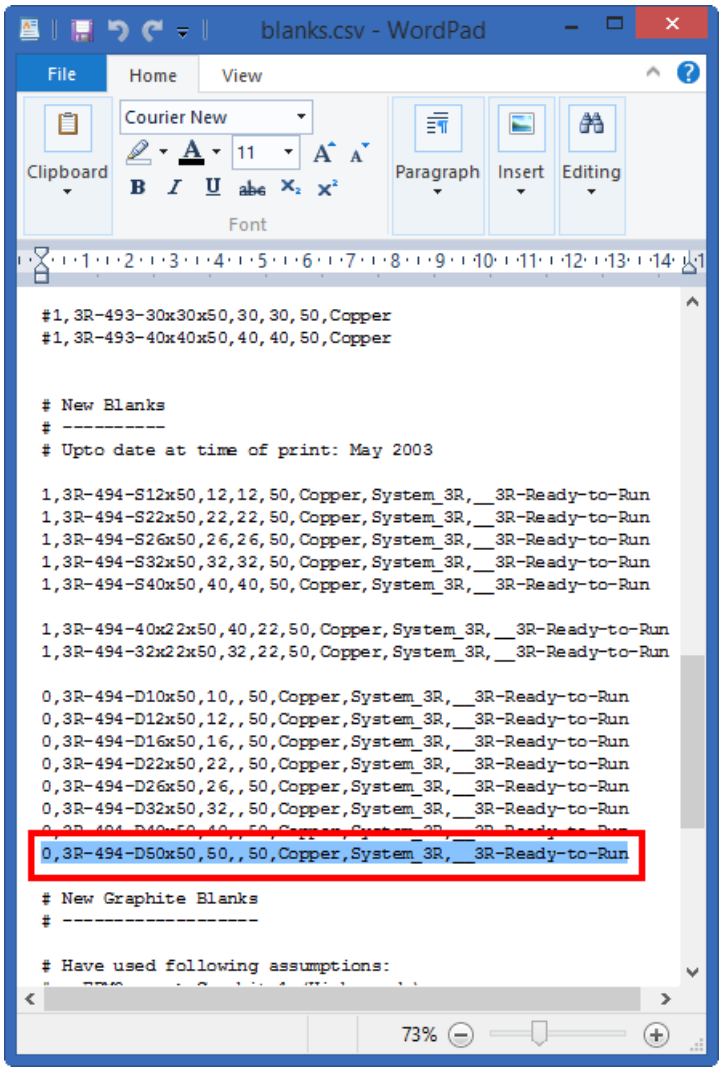

5 Copy the line and paste it into the blank line underneath.

6 Make the following edits to the new line:

Change the **diameter** (**D**) to **24.**

Change the **height** to **60**.

Your new line should like the one shown below:

0,3R-494-D24x60,24,,60,Copper,System_3R,__3R-Ready-to-Run

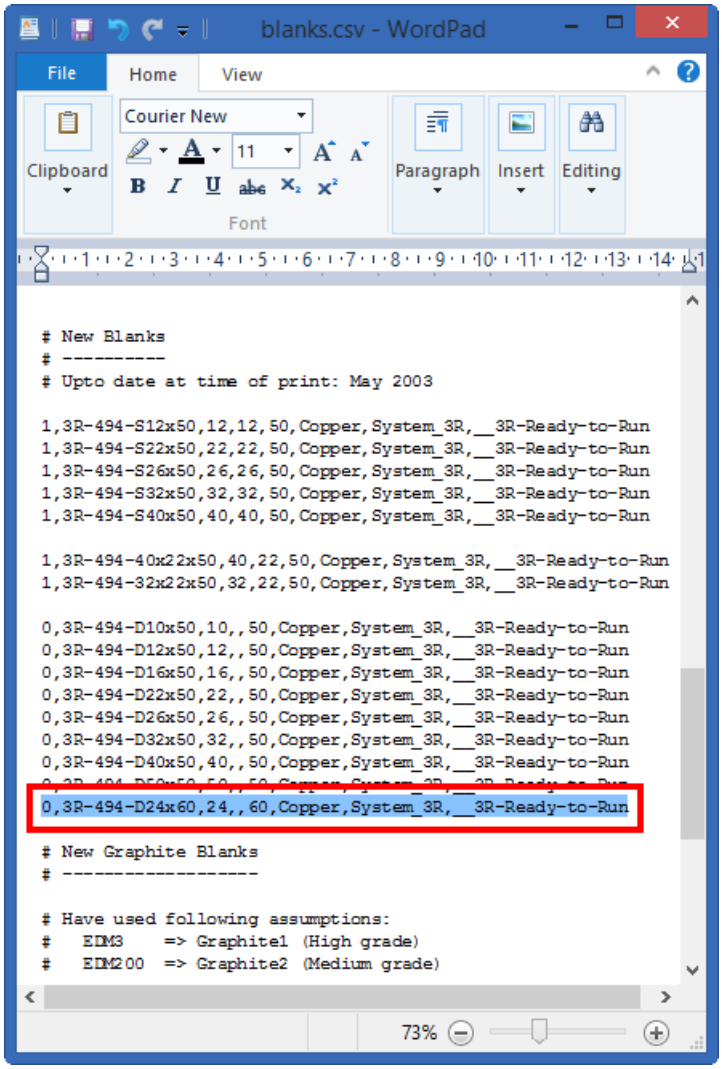

7 Click **File** from the menu.

8 Click **Save**.

9 Exit **PowerSHAPE**.

10 Restart **PowerSHAPE**. for the changes to take effect.

25. Use the new blank

1 Click **Module**.

2 Click **Electrode**.

3 Click **Import Data (Electrode_25.psmodel)**.

4 Click **Create an electrode** .

5 Click the concave area shown below.

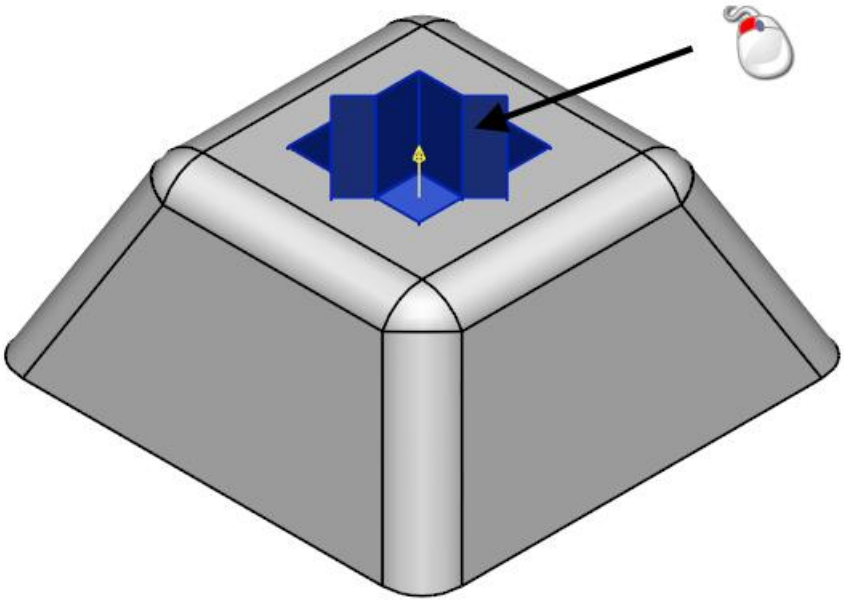

The selected area is displayed in the **Electrode Wizard**.

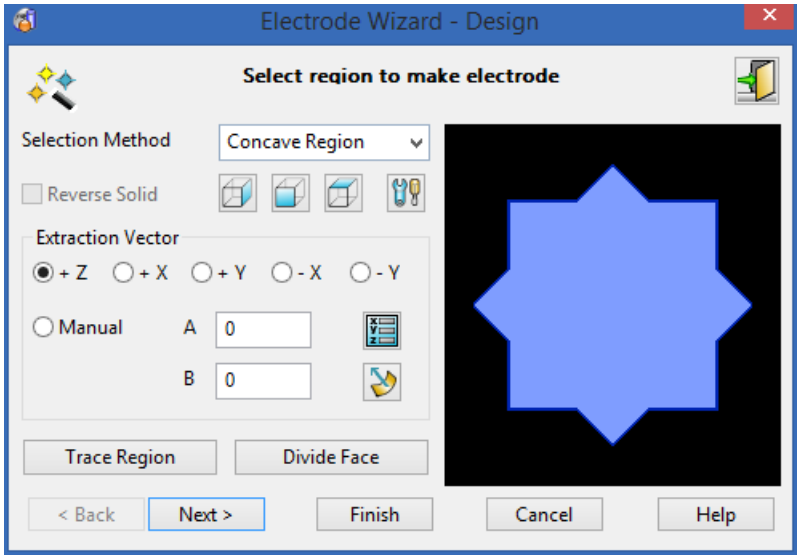

6 Click **Next**.

7 Do the following:

1. Change **Extension Distance** to **1**.
2. Change **Option** to **Normal to Edge**.
3. Change **Clearance Distance** to **5**.
4. Change **Position** to **Above Block**.

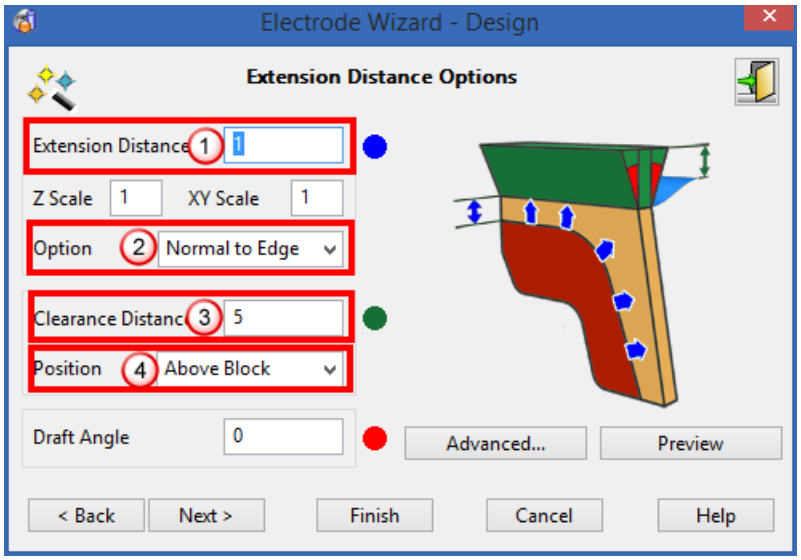

8 Click **Next**.

The new blank is now available to be selected.

9 Click the blank **3R-494-D24x60** from the drop-down list shown below:

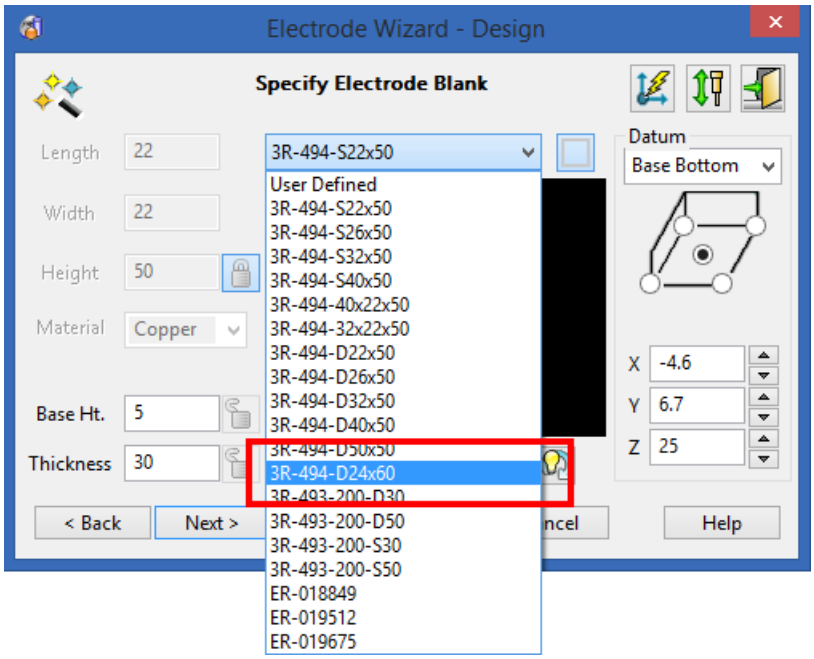

The **Wizard** displays the new blank.

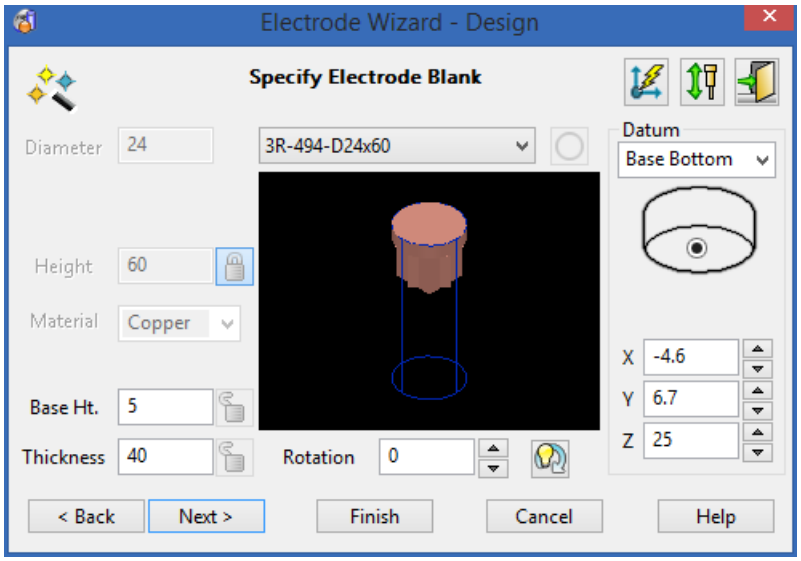

10 Click **Next**.

11 Click **None** for the **Base Holder** type.

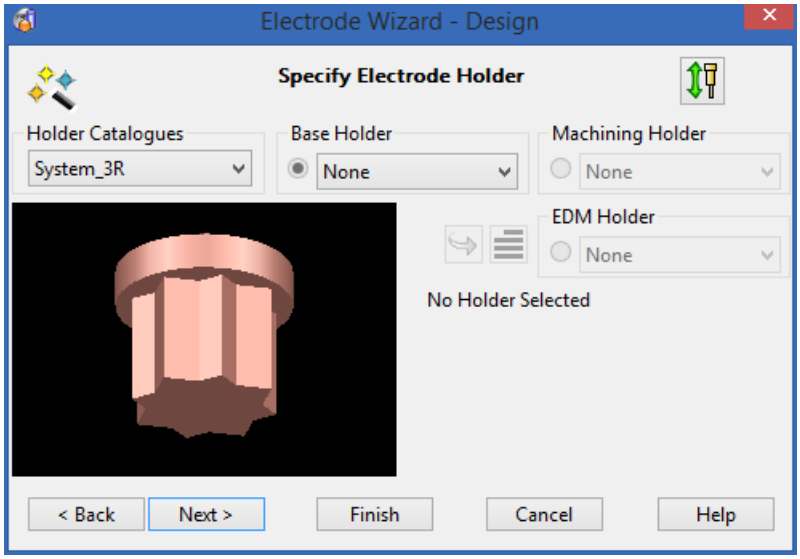

12 Click **Finish.**

13 Click **No.**

14 Click **Switch to electrode model window** .

Your model should look like the one shown below:

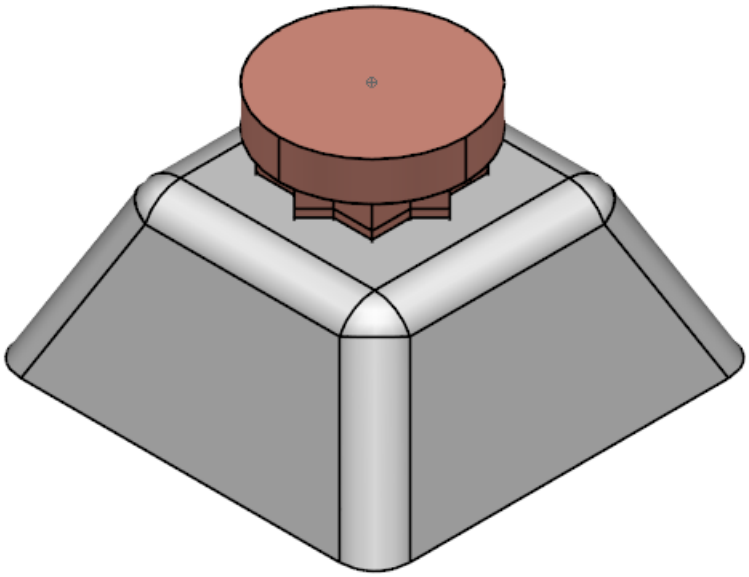

26. Add frames to the file blanks.csv

Add a frame to the blank.csv file, this will set a specified size of frame to each of the blanks that are displayed on the blanks page.

An electrode frame is an offset section of the electrode base that is machined accurately to allow pre-setting of the electrode.

1 Locate the following line in the **blanks.csv** file:

1,3R-494-S32x50,32,32,50,Copper,System_3R,__3R-Ready-to-Run

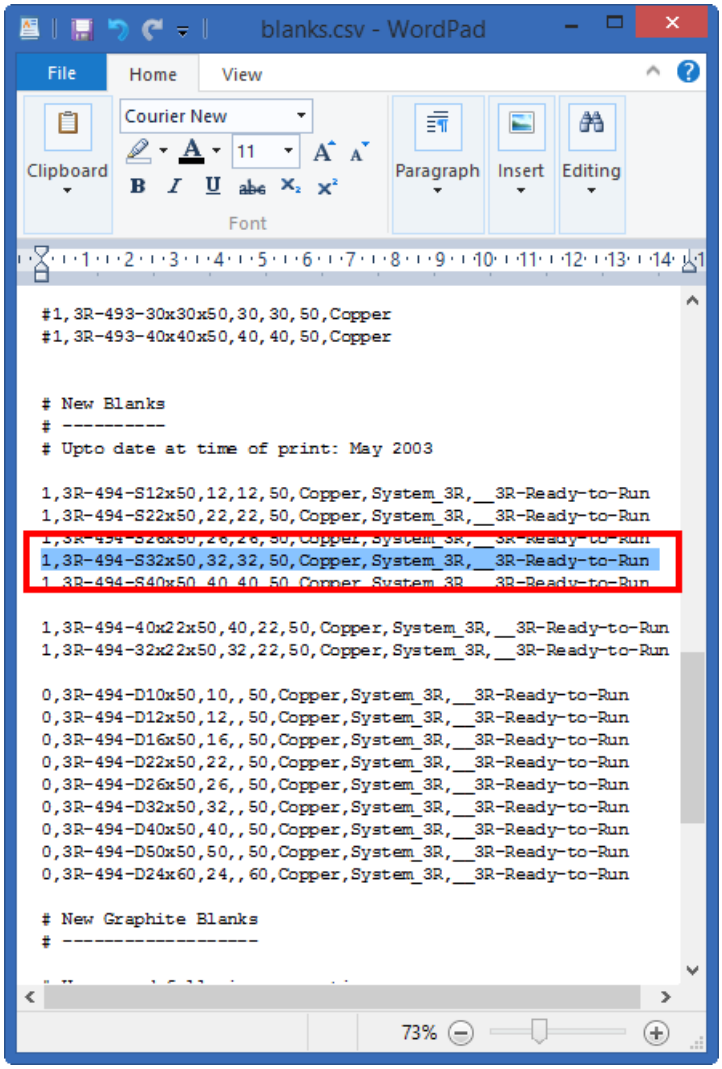

2 Add the following to the end of the line:

,25,25,4,2

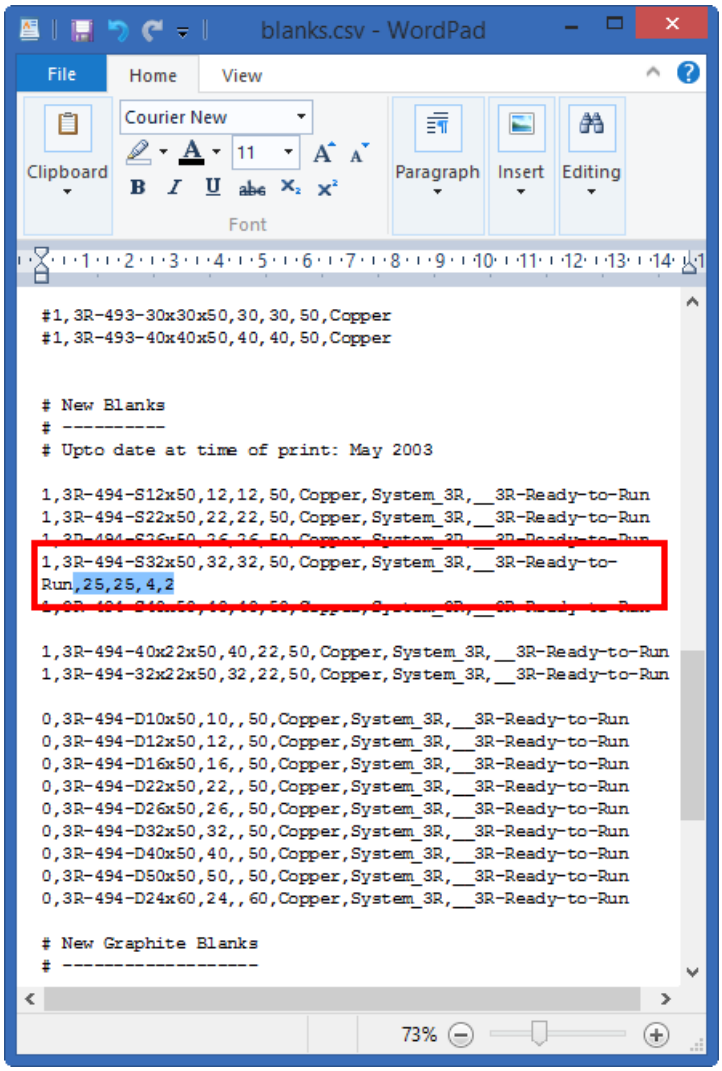

where **,25,25,4,2** describes the frame:

length of the frame = 25

width of the frame = 25

height of the frame = 4

chamfer length of the frame = 2

3 To use the edits then the following name will be selected on the blanks page of the Electrode Wizard.

3R-494-S32x50 .

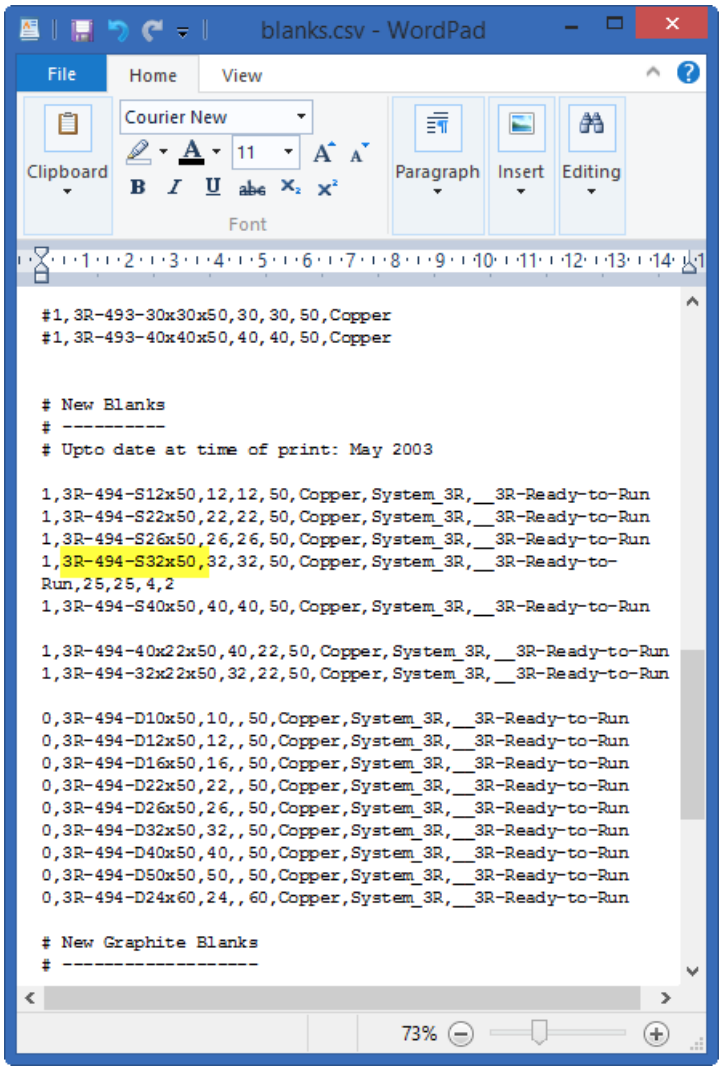

4 Click **File** from the menu.

5 Click **Save**.

6 Exit **PowerSHAPE**.

7 Restart **PowerSHAPE**. for the changes to take effect.

8 Close your editor.

27. Use the new frame

1 Click **Module**.

2 Click **Electrode**.

3 Click **Import Data (Electrode_27.psmodel)**.

4 Click **Create an electrode** .

5 Click the concave area shown below.

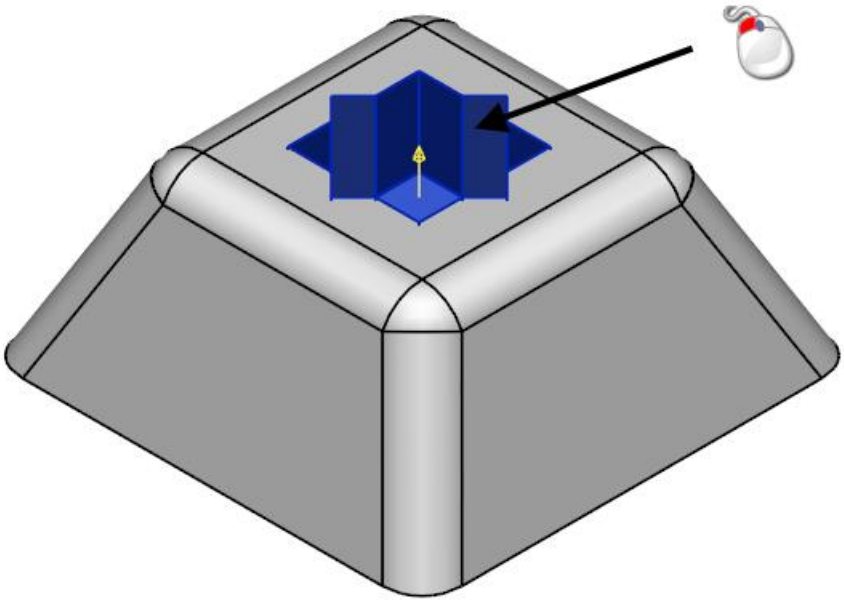

The selected area is displayed in the **Electrode Wizard**.

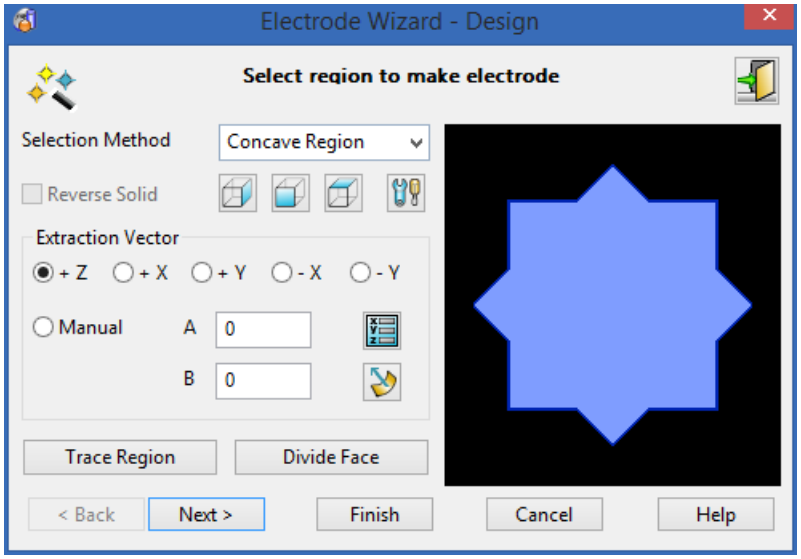

6 Click **Next**.

7 Do the following:

1. Change **Extension Distance** to **1**.
2. Change **Option** to **Normal to Edge**.
3. Change **Clearance Distance** to **5**.
4. Change **Position** to **Above Block**.

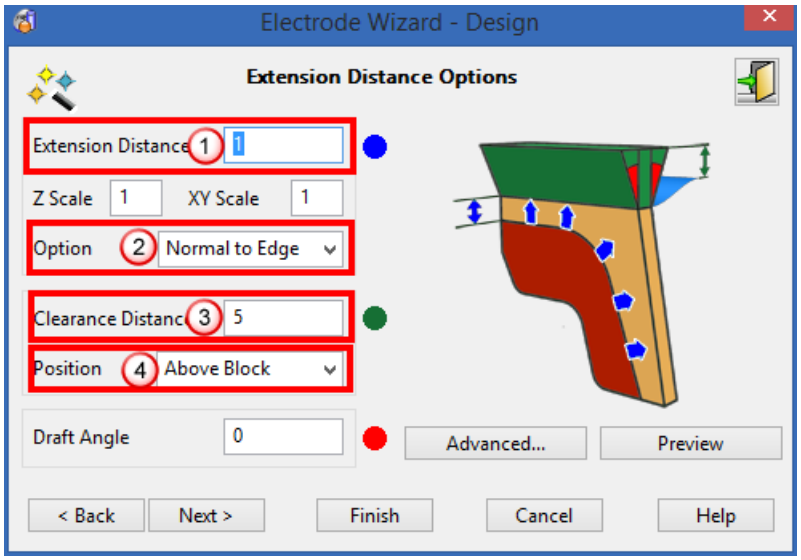

8 Click **Next**.

The blank with the frame is now available to be selected.

9 Click the blank **3R-494-S32x50** from the drop-down list shown below:

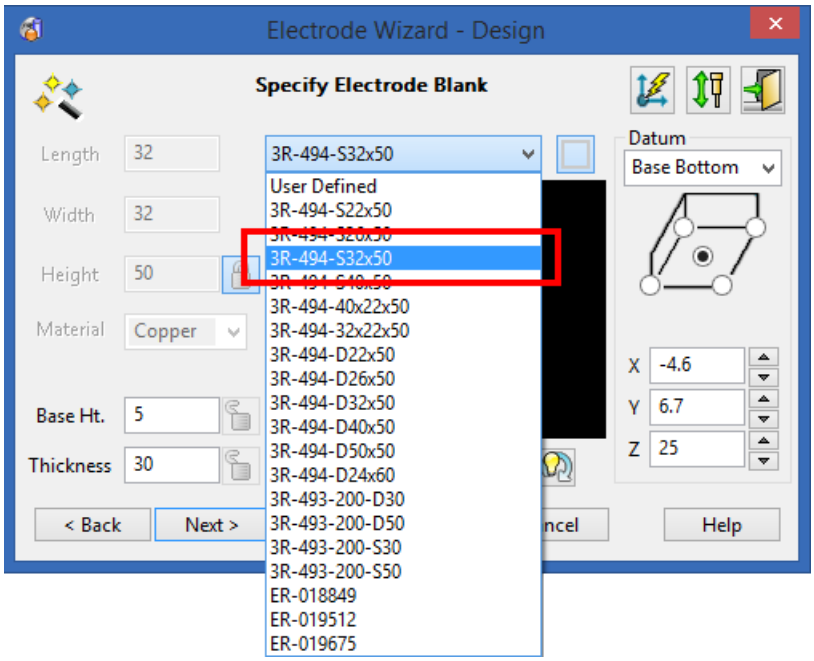

The **Wizard** displays the new blank.

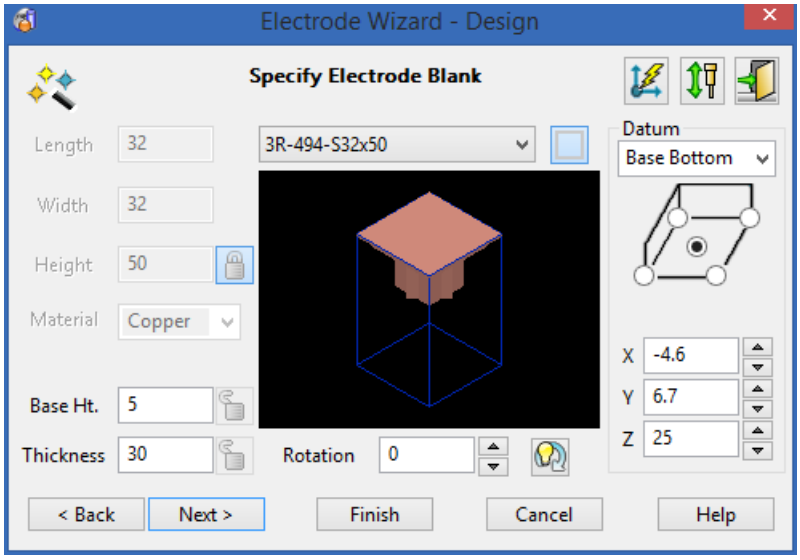

10 Click **Next**.

11 Click **None** for the **Base Holder** type.

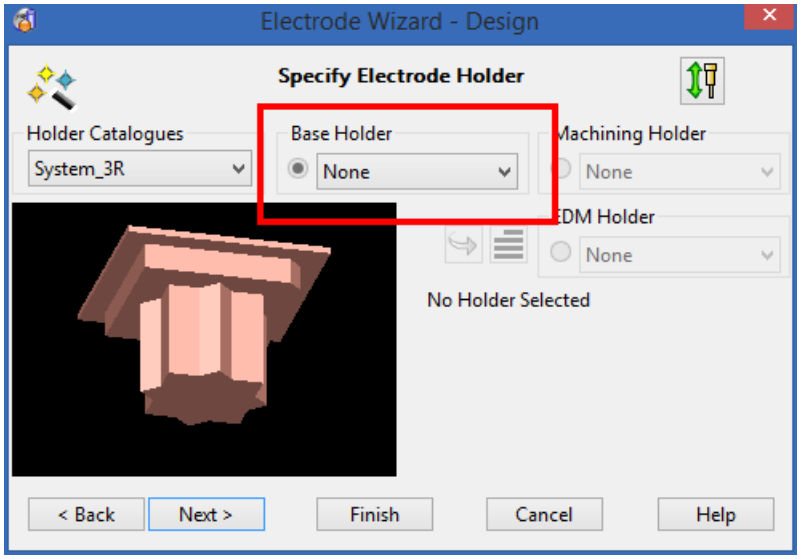

12 Click **Finish**.

13 Click **No**.

The detail setup sheet shows the frame, the chamfer on the frame is circled below:

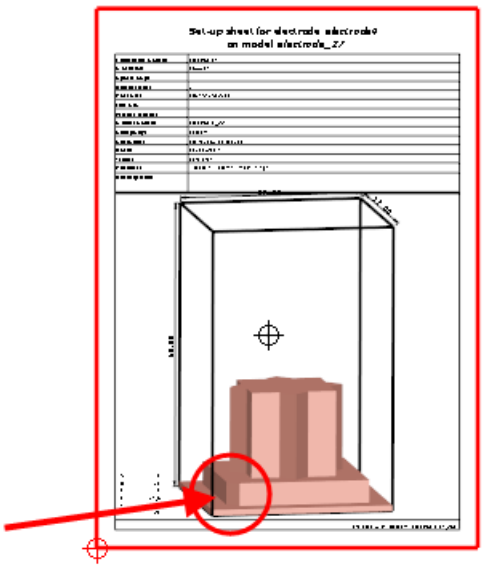

14 Click **Switch to electrode GA window** .

The GA setup sheet shows the frame, the chamfer on the frame is circled below:

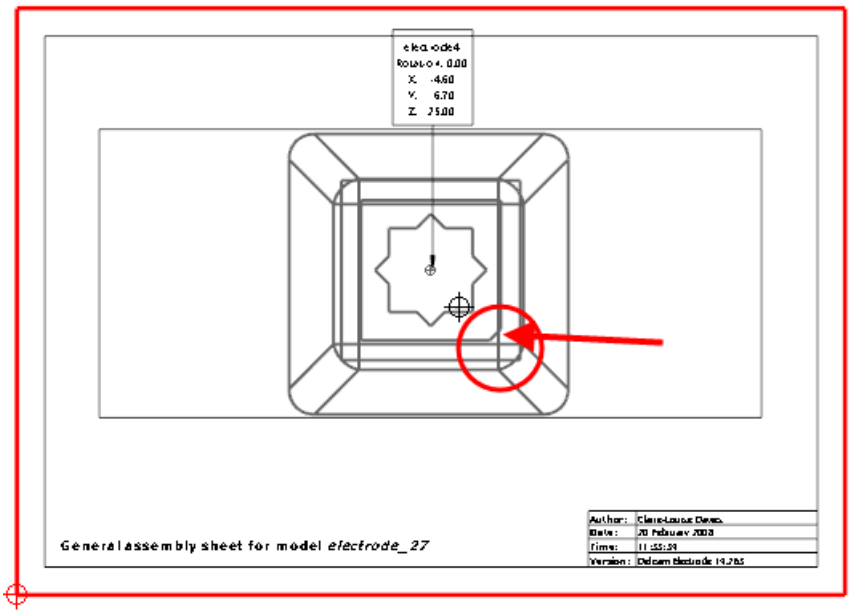

15 Click **Switch to electrode model window** .

Your model should look like the one shown below:

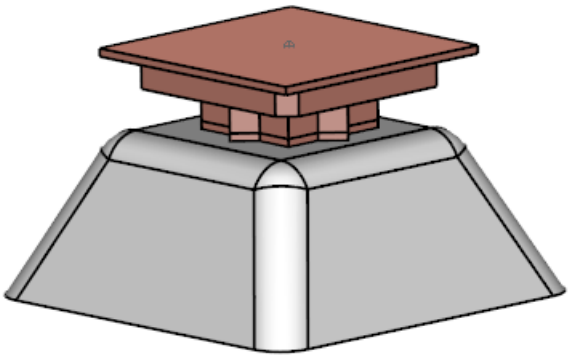

16 Using **Windows Explorer**, browse to the **shareddb** directory.

C:\Users\Public\Public Documents\Delcam\shareddb\

17 Delete the file **blanks.csv**.

18 Click **Exit** to close PowerSHAPE.

19 Restart **PowerSHAPE**.

Exporting and using trode files

28. Export a trode file

Export a .trode archive file that can be imported into PowerMILL for machining (or back into PowerSHAPE).

An electrode archive (.trode) file is a single file that stores a collection of one or more electrode .dgk files with associated metadata (.xml) files and setup sheet images.

1 Click **Module**.

2 Click **Electrode**.

3 Click **Import Data (Electrode_28.psmodel)**.

4 Click **Create an electrode** .

5 Click the concave area shown below.

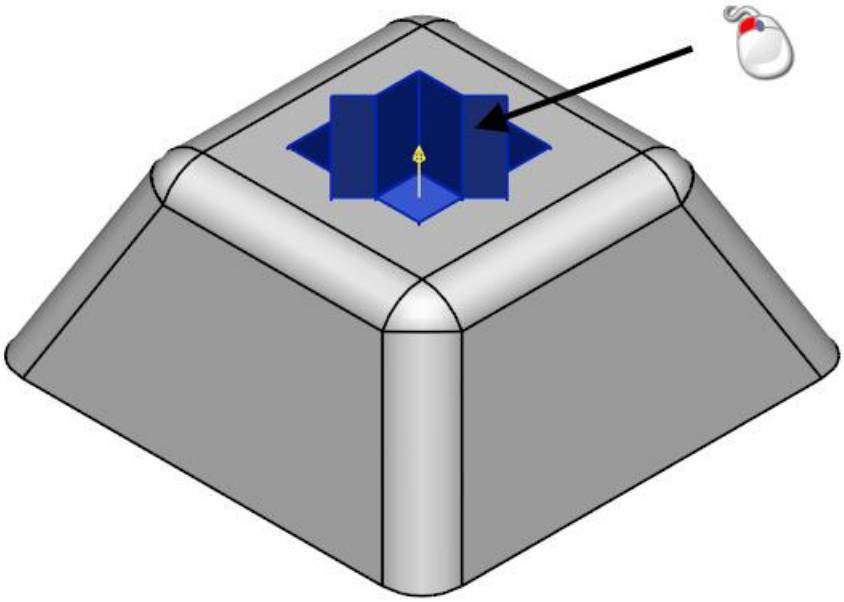

6 Click **Next**.

The default values of the Extension Distance Options page will be used.

7 Click **Next**.

The default values of the Specify Electrode Blank page will be used.

8 Click **Next**.

The Specify Electrode Holder page is displayed.

9 Click **None** for the **Base Holder** type.

10 Click **Next**.

The default values of the General Options page will be used.

11 Click **Next**.

The default values of the Electrode family page will be used.

12 Click **Next**.

13 Do the following:

① Click **PowerMILL**.

② Click **EDM data-transfer files**.

③ Enter **C:\temp** in the **Directory to export to**.

4 Click ...

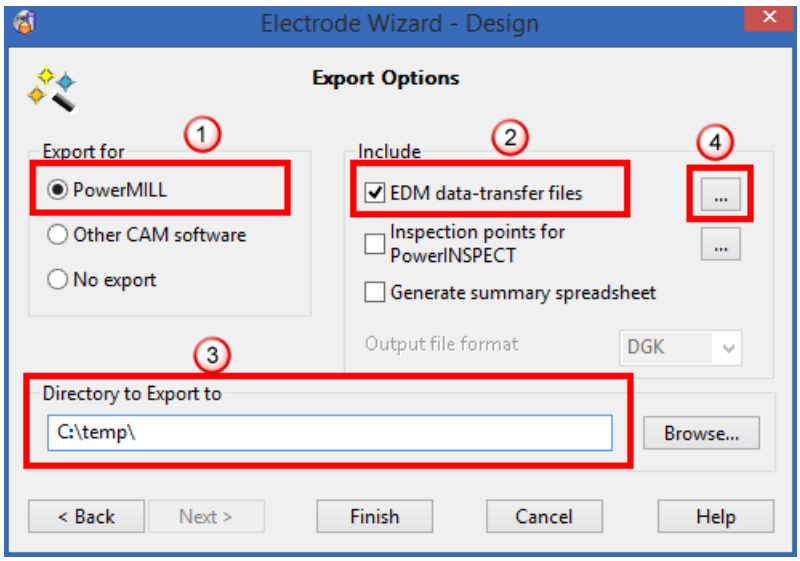

14 Click **OPS Ingersoll**.

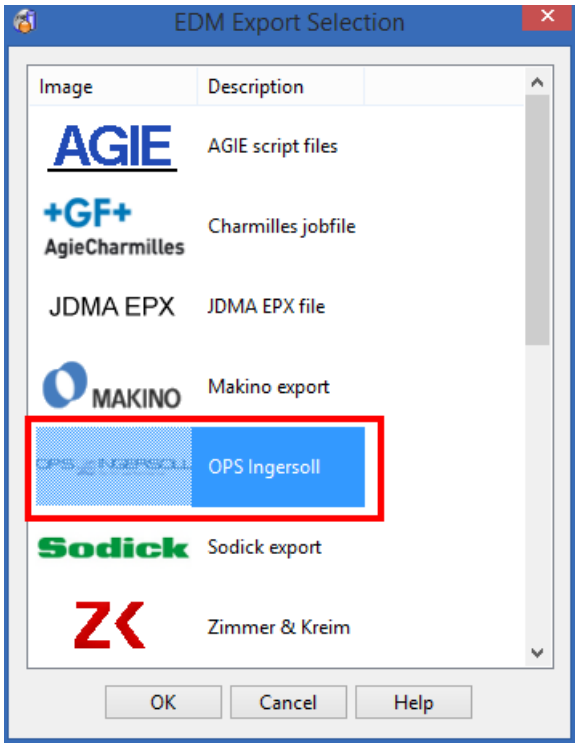

15 Click **OK**.

16 Click **Finish**.

17 Click **No**.

The electrode and setup sheets are generated and a trode file is exported to c:\temp.

18 Click **Switch to electrode model window** .

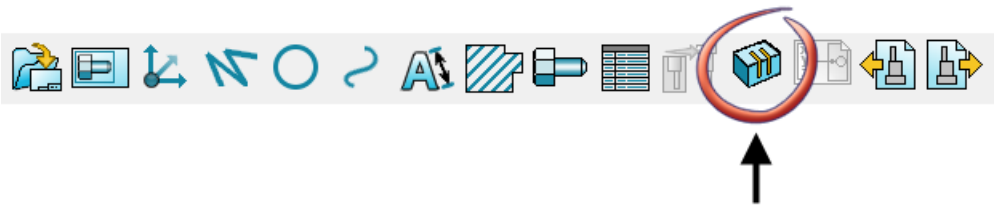

29. Use the electrode extension

TrodeExtension_XXXXX.exe needs to be installed before the following steps can be performed. (Where XXXXX is the version number of the program.)

1 Open **Windows Explorer**.

2 Browse to **C:\temp**.

3 Click on the **electrode_data.trode** file using the right mouse button.

4 Click **Delcam Electrode > Extract Geometry**.

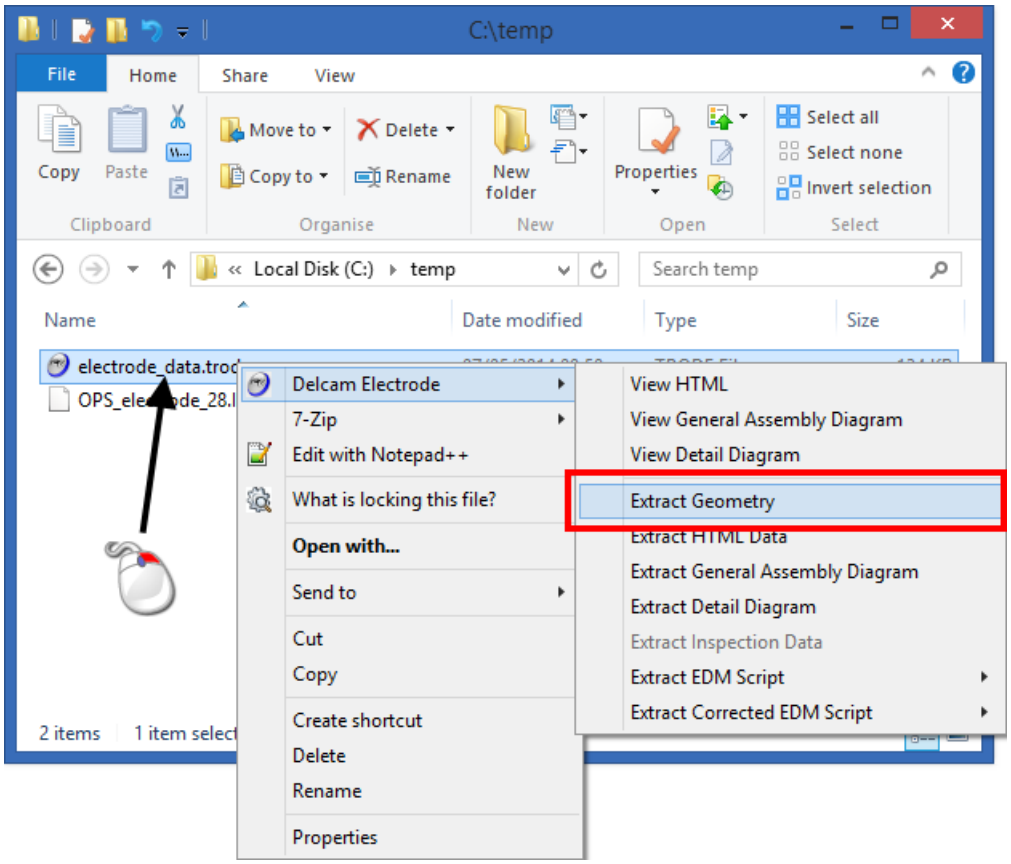

The Select electrode dialog is displayed.

5 Click **electrode1**.

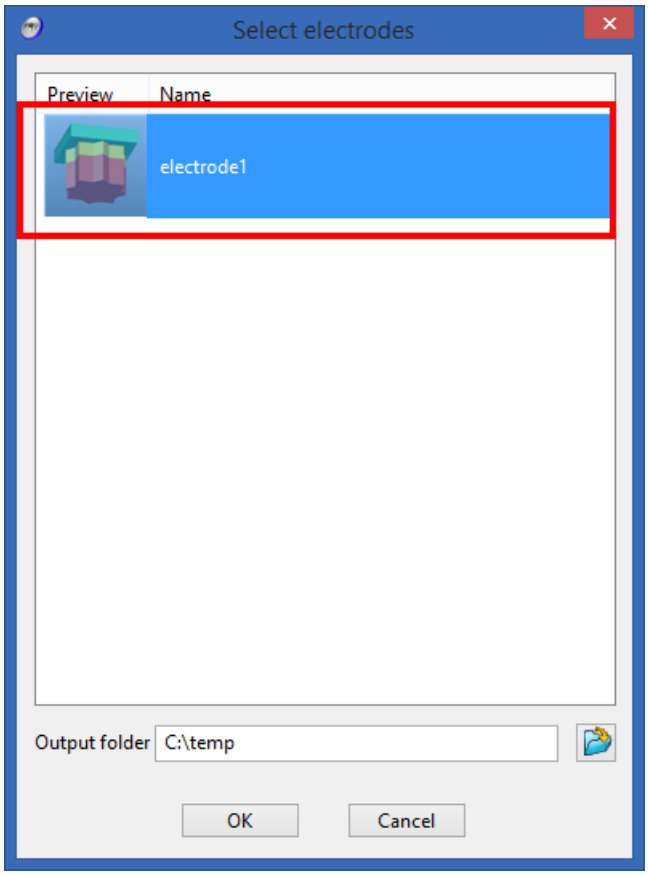

6 Click **OK**.

A dgk file electrode1.dgk is extracted into C:\temp.

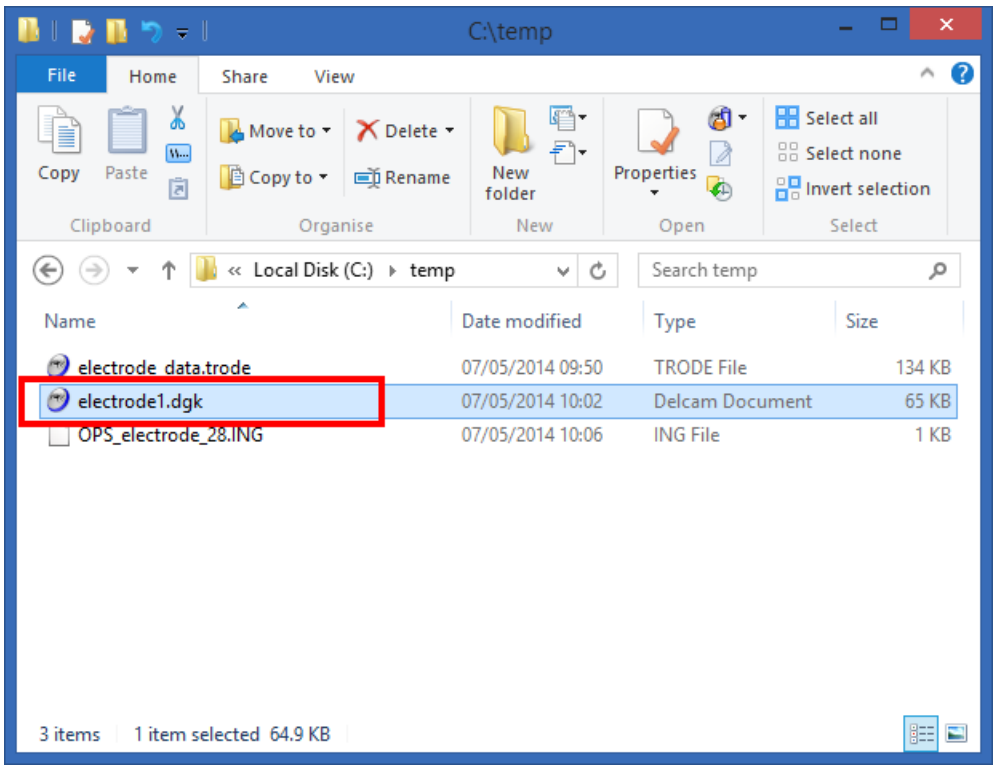

7 Click on the **electrode_data.trode** file using the right mouse button.

8 Click **Delcam Electrode > View General Assembly Diagram**.

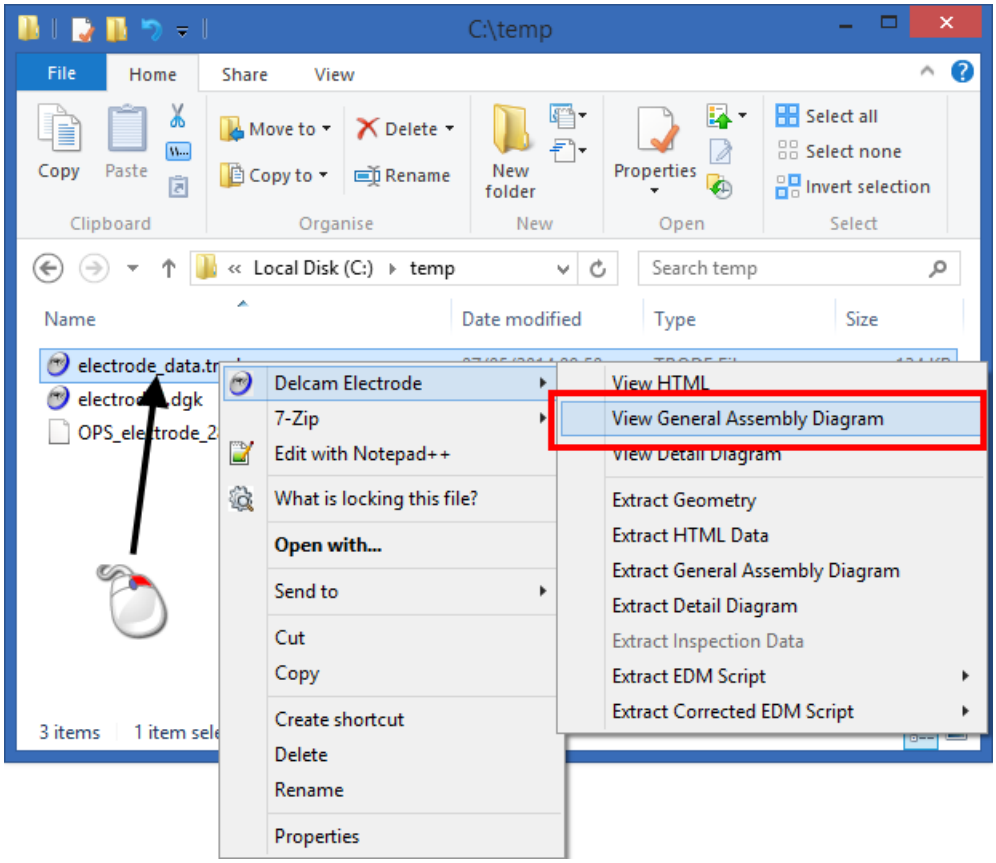

The Select electrode dialog is displayed.

9 Click **electrode1**.

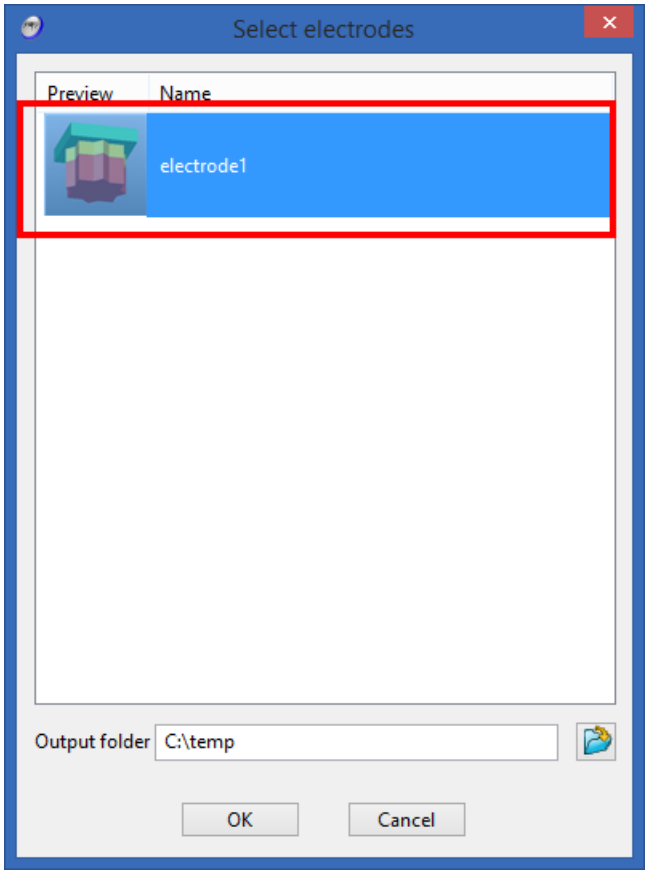

10 Click **OK**.

An image of the GA sheet is displayed.

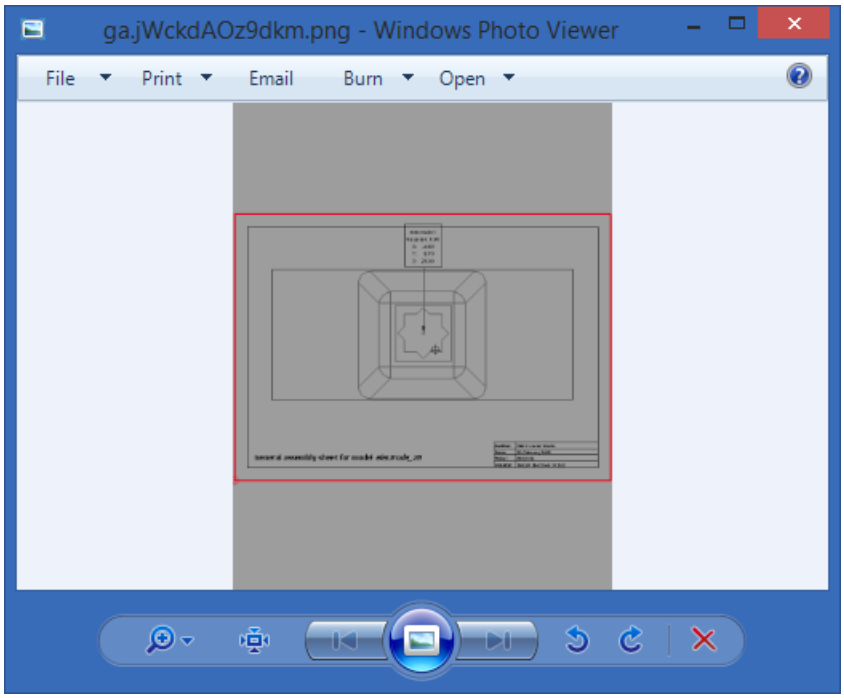

11 The trode file can also be imported into PowerMILL.

Summary

You have created and edited a number of electrodes using the electrode wizard.

You have done the following:

- Created a basic electrode.
- Divided faces to create an electrode in a specified area.
- Copied electrodes using the general edits.
- Created a solid core.
- Edited the faces of an electrode.
- Registered a solid as an electrode.
- Created and simulated the burn path of an electrode.
- Created a new template drawing.
- Added custom information to the template drawing.
- Added blanks to the wizard.
- Added frames to the wizard.
- Export and use .trode files.