PowerSHAPE 2016 R1

Tutorials Manual

Reverse engineering

Copyright © 1982-2015 Delcam Ltd. All rights reserved.

Delcam Ltd has no control over the use made of the software described in this manual and cannot accept responsibility for any loss or damage howsoever caused as a result of using the software. Users are advised that all the results from the software should be checked by a competent person, in accordance with good quality control procedures.

The functionality and user interface in this manual is subject to change without notice in future revisions of the software.

The software described in this manual is furnished under licence agreement and may be used or copied solely in accordance with the terms of such licence.

Delcam Ltd grants permission for licensed users to print copies of this manual or portions of this manual for personal use only. Schools, colleges and universities that are licensed to use the software may make copies of this manual or portions of this manual for students currently registered for classes where the software is used.

Acknowledgements

This documentation references a number of registered trademarks and these are the property of their respective owners. For example, Microsoft and Windows are either registered trademarks or trademarks of Microsoft Corporation in the United States.

Patent Information

Emboss functionality is subject to patent number GB 2389764 and patent applications US 10/174524 and GB 2410351.

Morphing functionality is subject to patent application GB 2401213.

PowerSHAPE 2016 R1. Published on 25 August 2015

Contents

Reverse Engineering Tutorial 2

Automatically create surfaces from triangles 2
1. Import the model 2
2. Use Automatic segmentation to create surfaces 4
3. Add surfaces to a level 16
4. Paint triangles of the mesh 17
5. Divide the mesh by colour 20
6. Shrink-wrap surfaces to a mesh 21
7. Use Smart Surfacer to create a surface 23
Manually creating surfaces from meshes 28
8. Create oblique curves from the meshes 28
9. Create surface extrusion - 1 32
10. Create surface extrusion - 2 35
11. Extend the surfaces 38
12. Turn the trimming off on a surface 42
Creating a solid from the surfaces 44
13. Automatically trim surfaces to create a solid 44
Finishing the solid model 48
14. Add draft to a vertical face 48
15. Add solid fillets 50
Summary 56

Reverse Engineering Tutorial

Automatically create surfaces from triangles

1. Import the model

If you do not have the licence required for the commands in this tutorial*, go to the next step in the tutorial and click **Import Data**.

The model will then be provided with the correct data and you will be able to complete the tutorial.

*In most cases selecting an icon will inform you that the necessary licence is missing. In some modules of PowerSHAPE the icon(s) may be missing entirely.

1 Click **Import Data (S_Head.psmodel)**.

2 Click **View ISO1** .

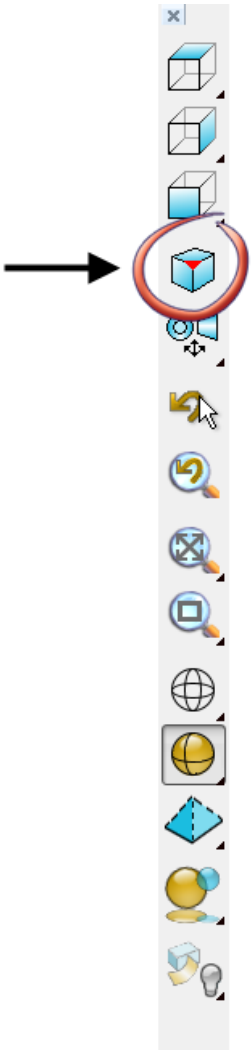

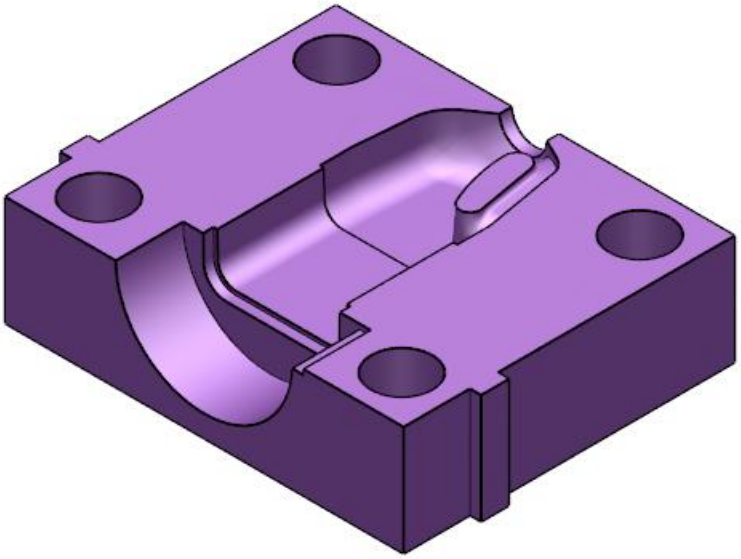

2. Use Automatic segmentation to create surfaces

1 Click the mesh to select it, the **Mesh edit** toolbar is displayed.

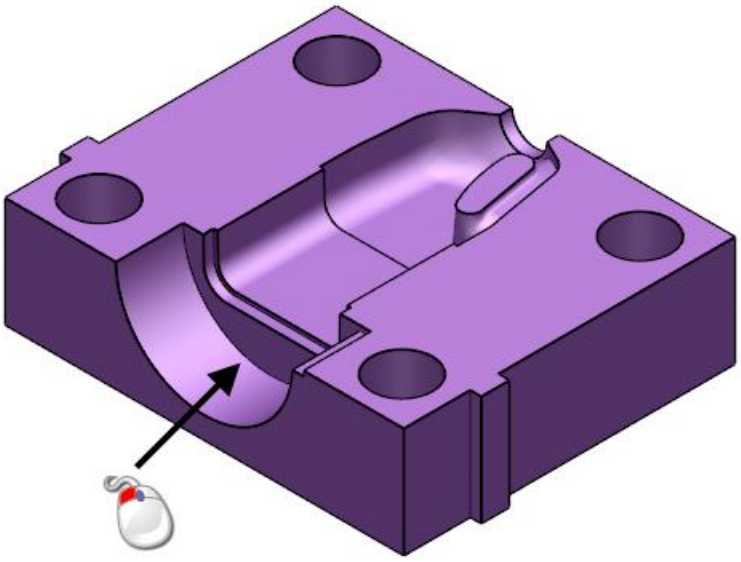

2 Click **Automatically segment mesh** .

The **Segment Mesh** dialog is displayed.

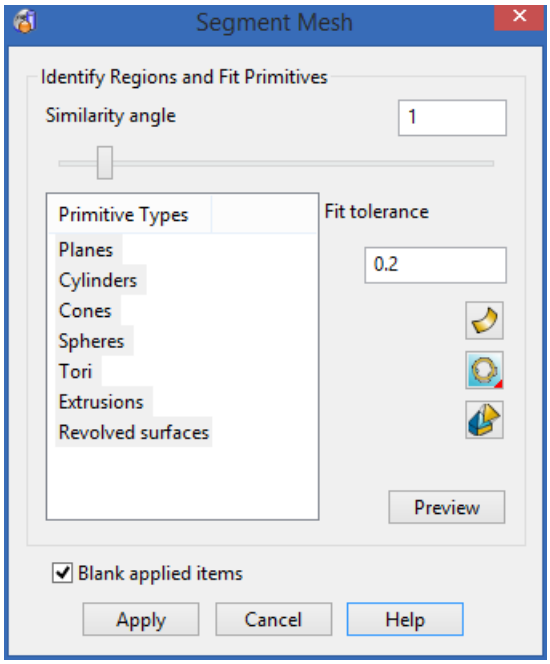

A preview of the automatically fit surfaces are displayed in the model and the mesh is coloured to show the identified areas.

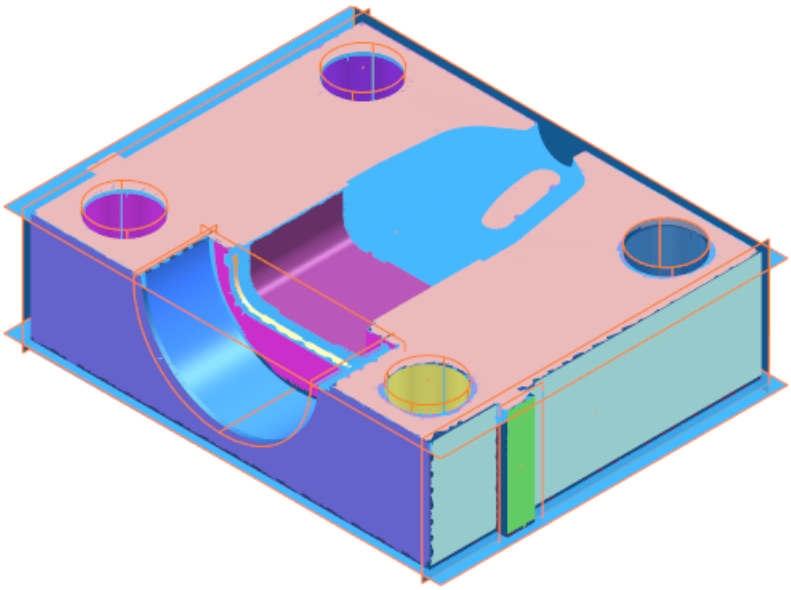

3 Click the left mouse button and drag a box, as shown below:

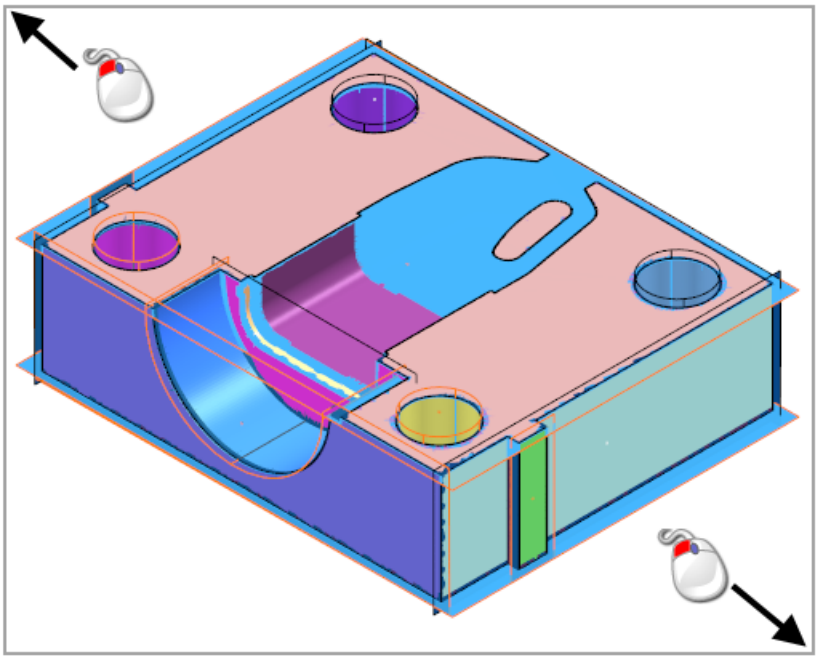

The fit surfaces are selected.

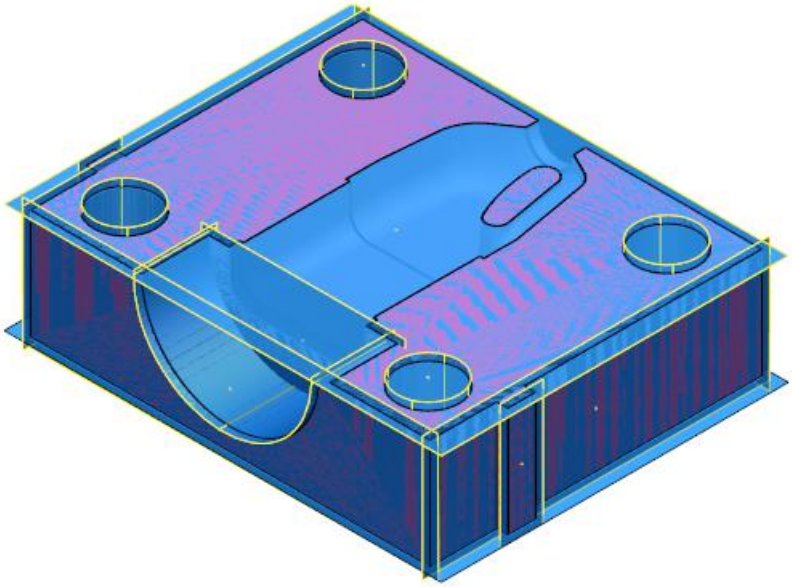

4 Click **Apply**.

The fit surfaces are created and blanked from the view and the fit areas of the mesh are coloured in white.

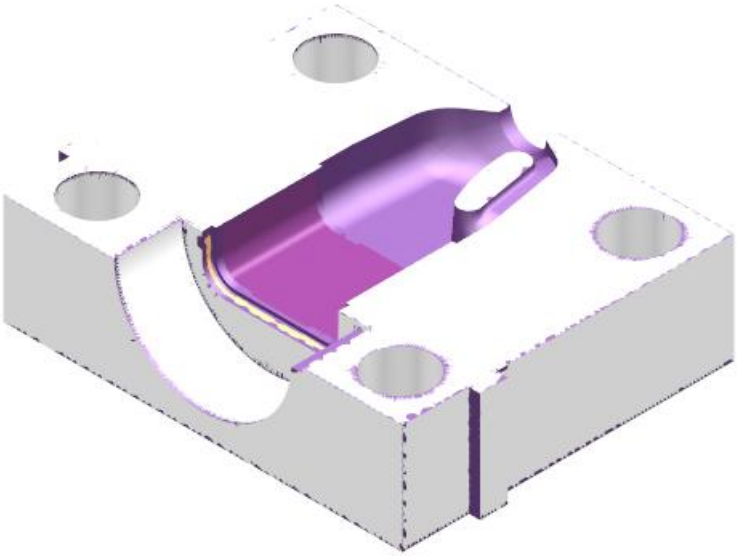

5 Click **Manual segmentation** .

The **Manually segment mesh** toolbar is displayed.

Plane is selected as the type of surface to fit.

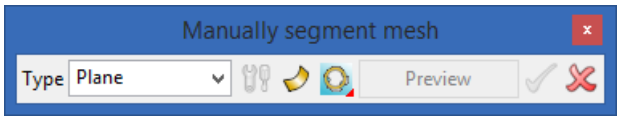

The selection mode **Select triangle area to local horizon angle** is selected ready for a selection on the mesh to be made.

6 Click **Zoom to box Mode** .

7 Click the left mouse button and drag a box, as shown:

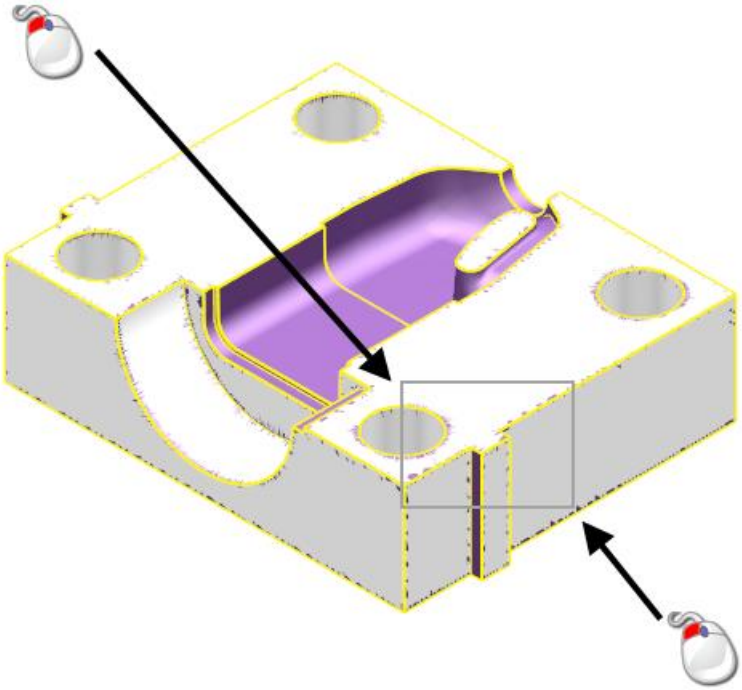

8 Click the mesh to flood fill the area to select the triangles.

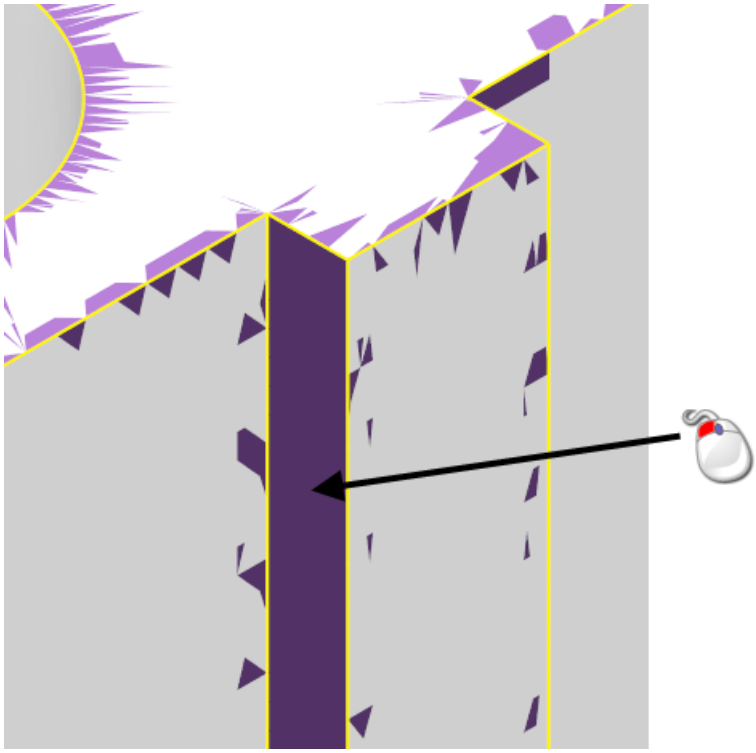

9 Click **Preview**.

A preview of the surface is drawn on the model.

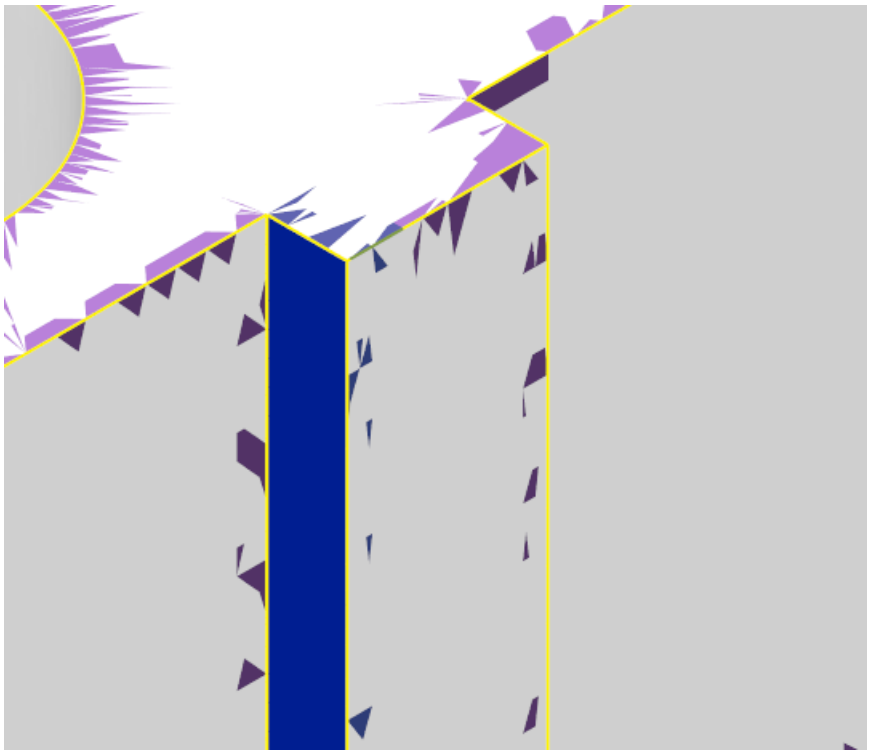

10 Click **Apply** .

The fit surface is created and blanked from the view and the fit area of the mesh is coloured in white.

11 Click **Resize to Fit** .

12 Click **Zoom to box Mode** .

13 Click the left mouse button and drag a box, as shown:

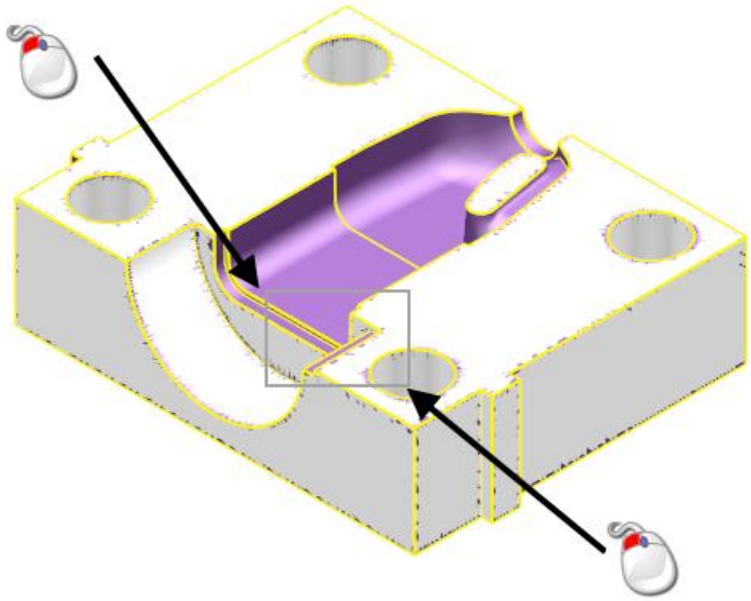

14 Click the mesh to flood fill the area to select the triangles.

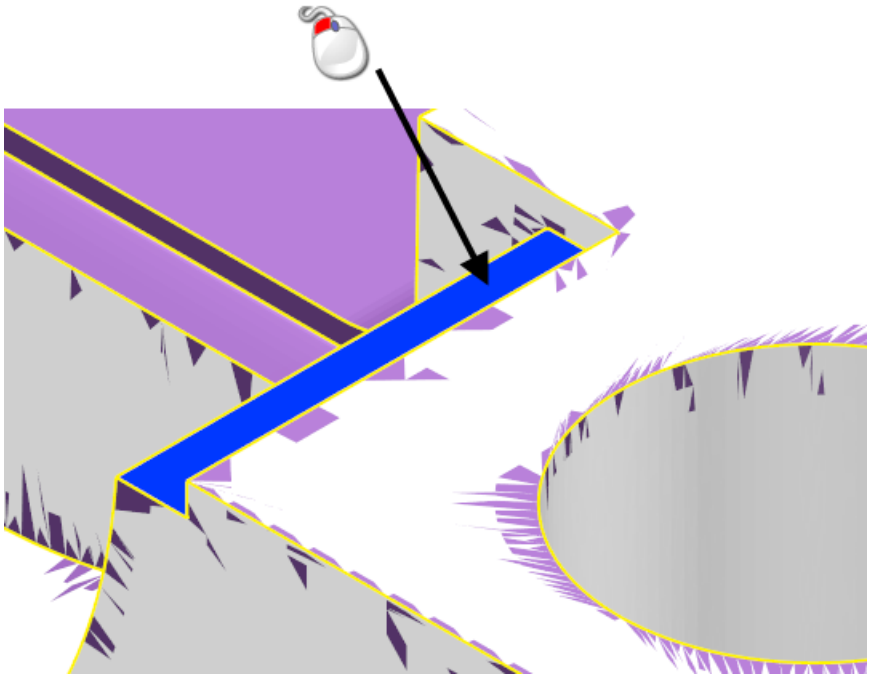

15 Click **Preview**.

16 Click **Apply** .

17 Click the mesh to flood fill the area to select the triangles.

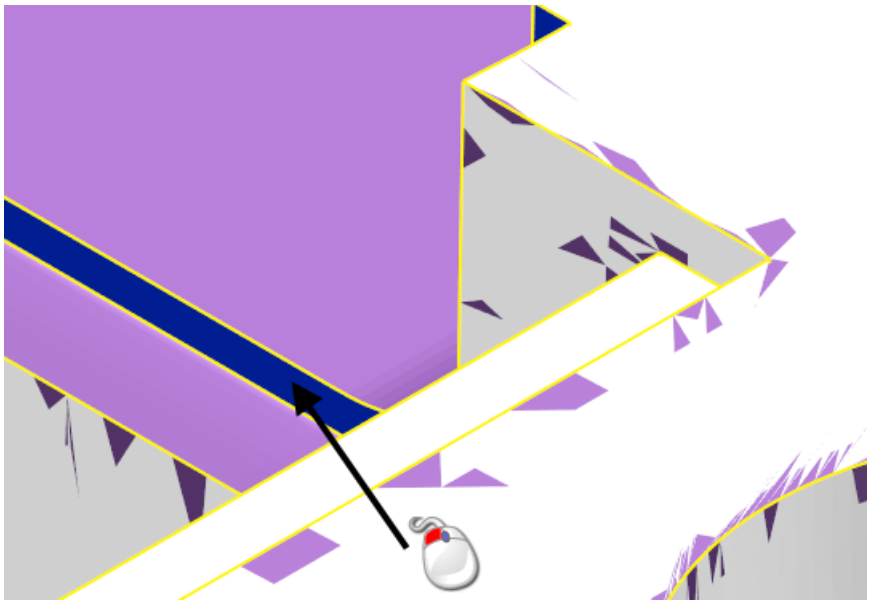

18 Click **Preview**.

19 Click **Apply** .

20 Click **Resize to Fit** .

21 Click **Zoom to box Mode** .

22 Click the left mouse button and drag a box, as shown:

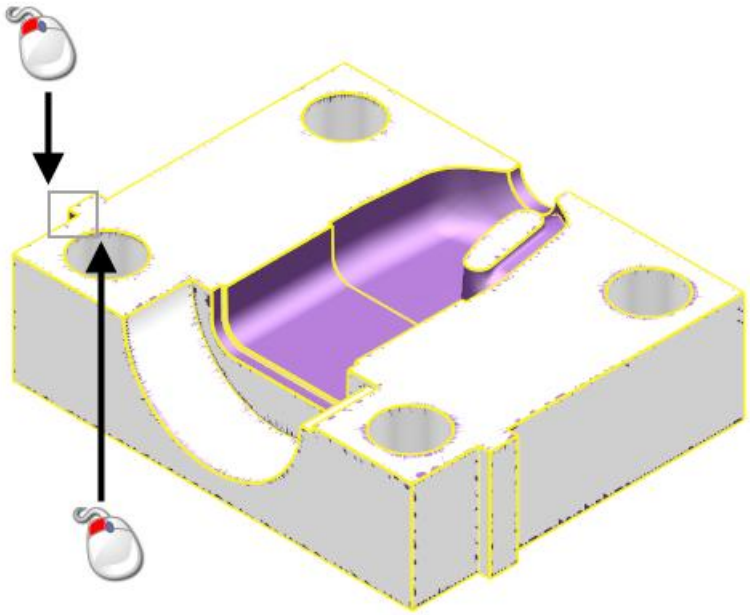

23 Click the mesh to flood fill the area to select the triangles.

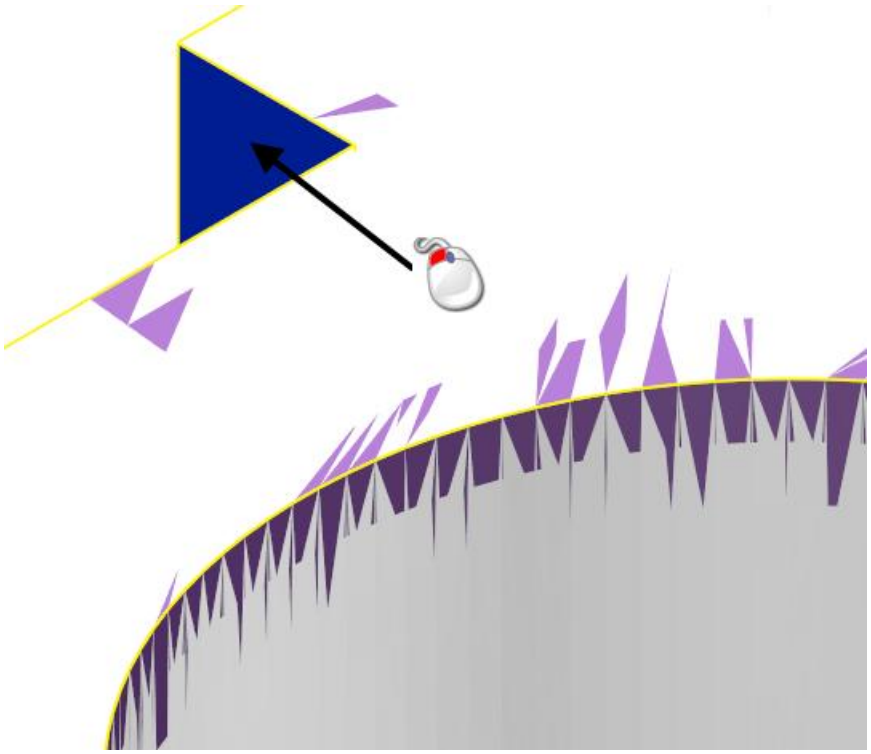

24 Click **Preview**.

25 Click **Apply** .

26 Click **Resize to Fit** .

27 Click **View ISO1** using the right mouse button .

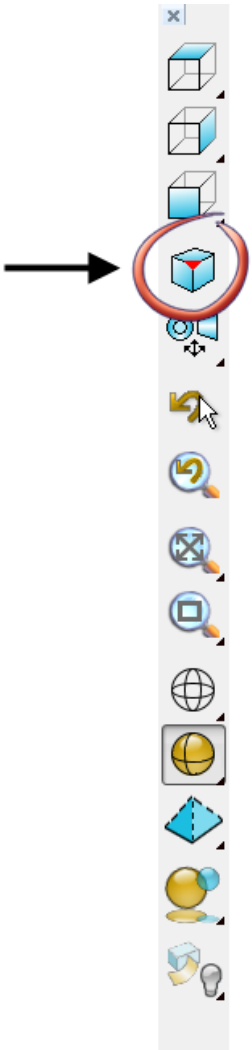

28 From the flyout, click **View ISO3** .

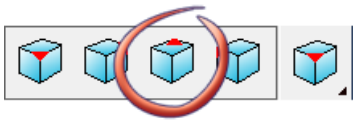

29 Repeat steps **21** to **26** for the areas show below:

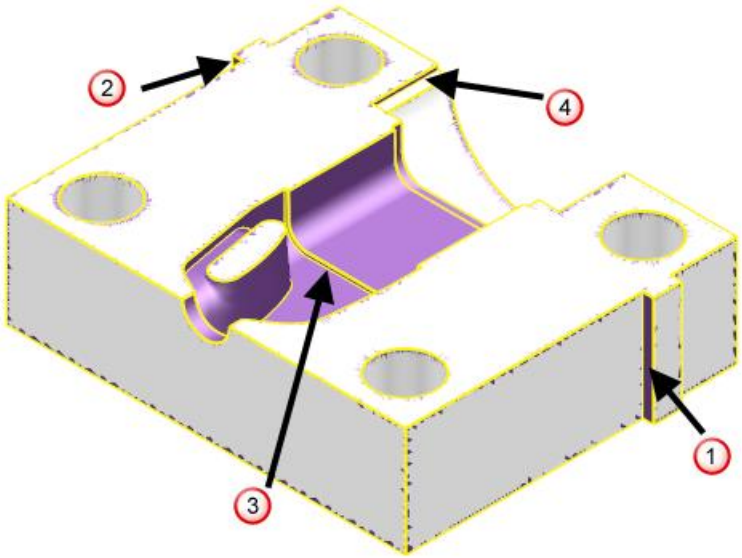

1

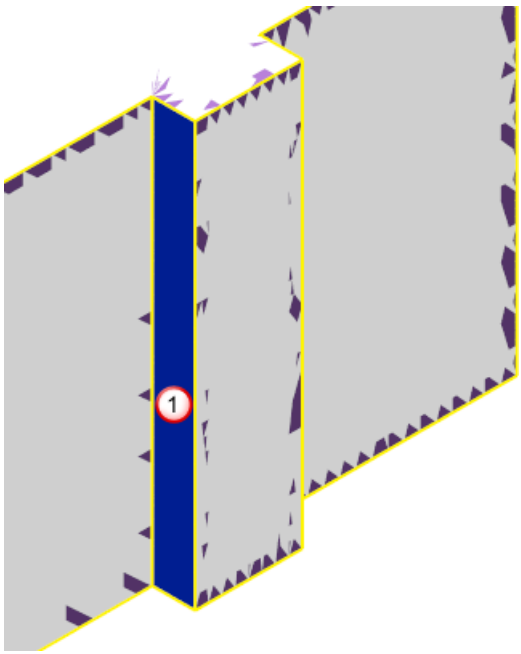

2

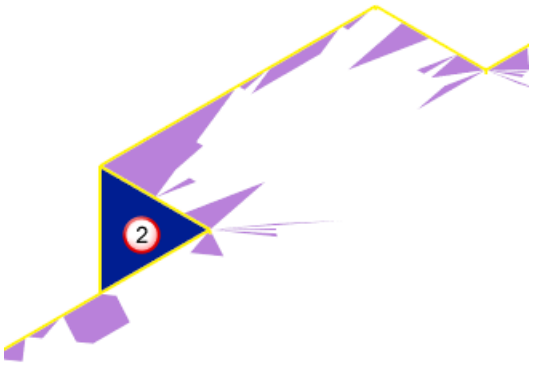

3

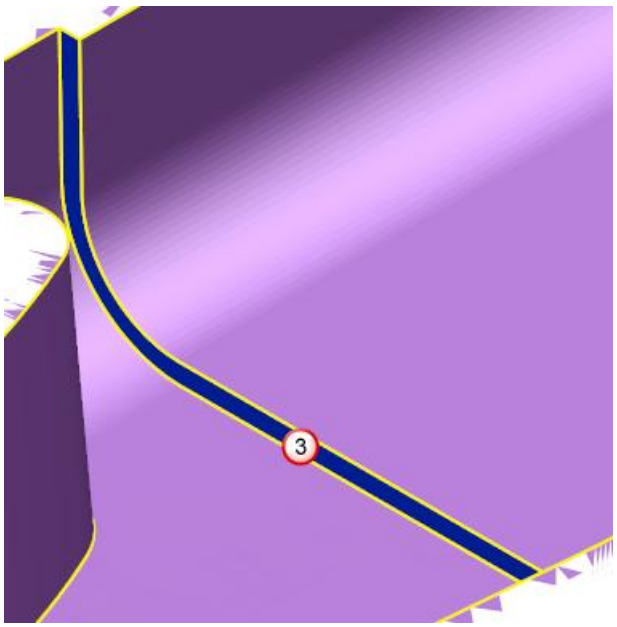

4

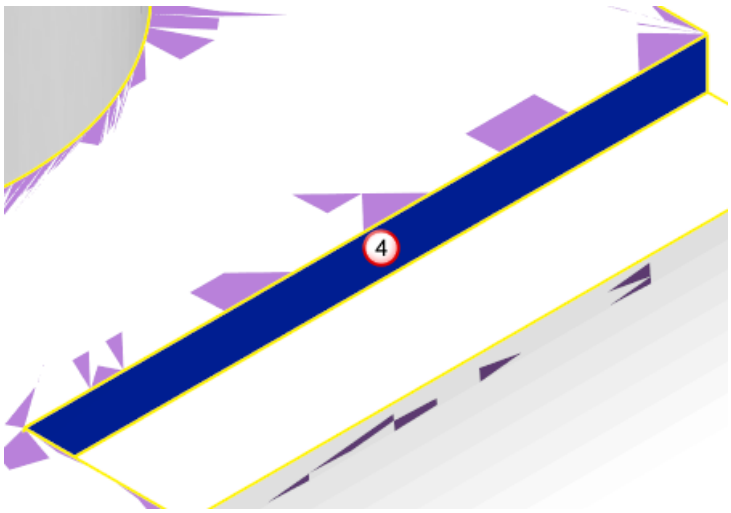

30 Click **Cylinder** from the **Type** drop-down list.

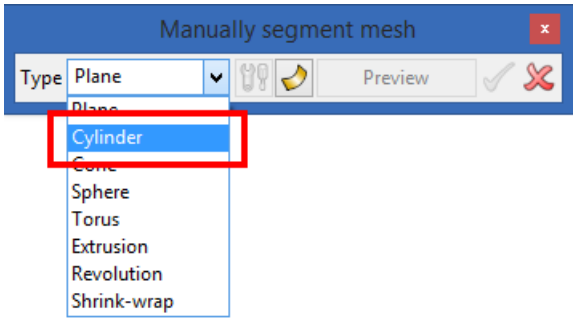

31 Click **Select triangle area to discontinuity** .

32 Click the mesh to flood fill the area to select the triangles.

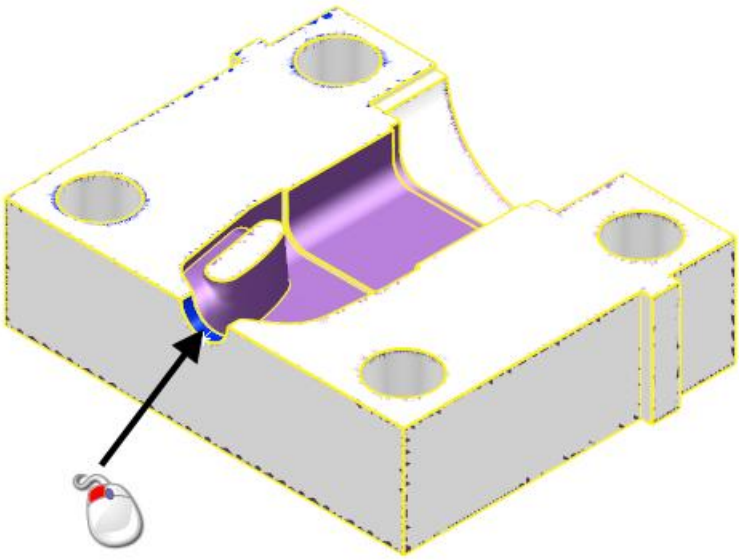

33 Click **Preview.**

34 Click **Apply** .

35 Click **Dismiss** .

36 Click **Cancel.**

37 From the flyout, click **View ISO1** .

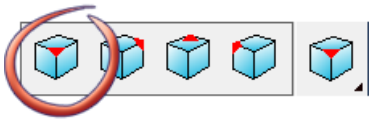

38 Click anywhere in the graphics window to deselect the model.

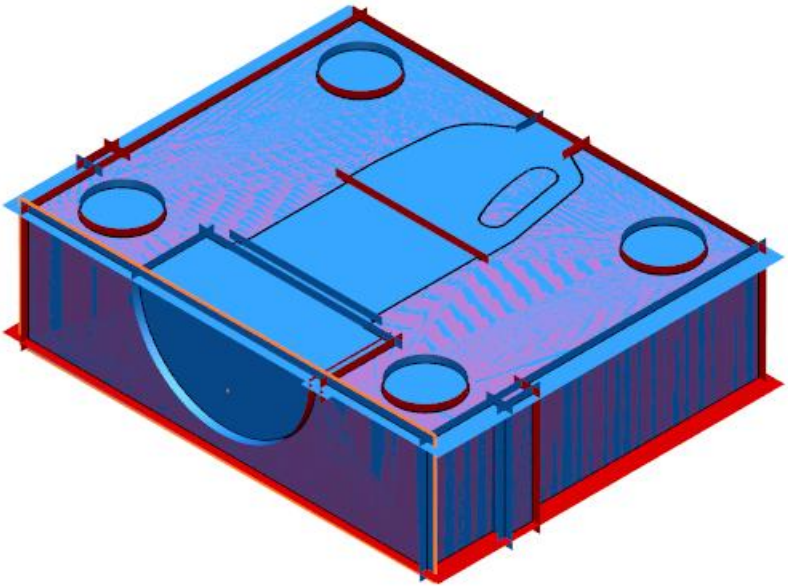

3. Add surfaces to a level

1 Click **Quick select all surfaces** .

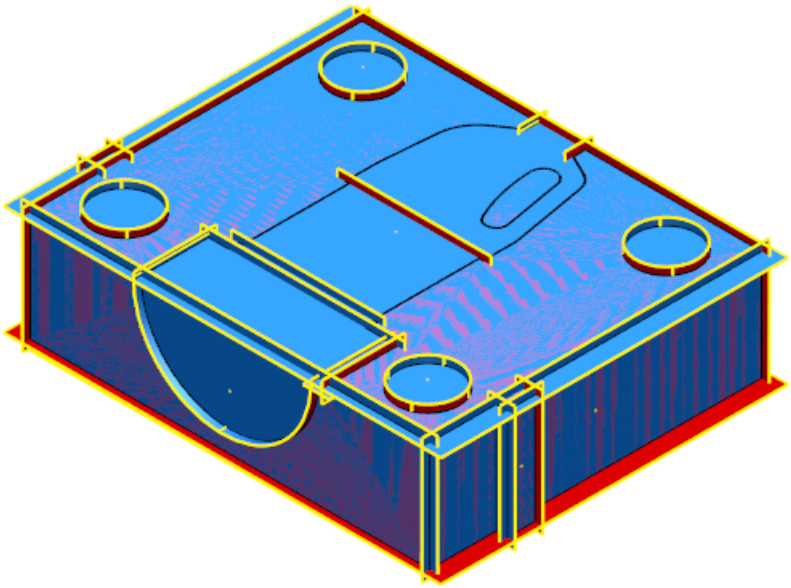

2 Move the cursor over Level **1**.

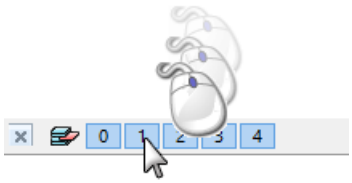

3 When the cursor is in position click the middle mouse button .

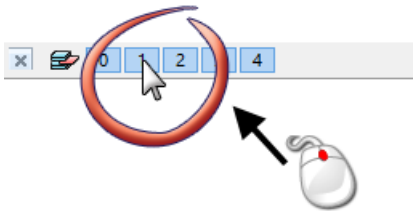

The surfaces are now moved onto Level **1**.

4 Click Level **1** to turn it off.

4. Paint triangles of the mesh

1 Click the mesh.

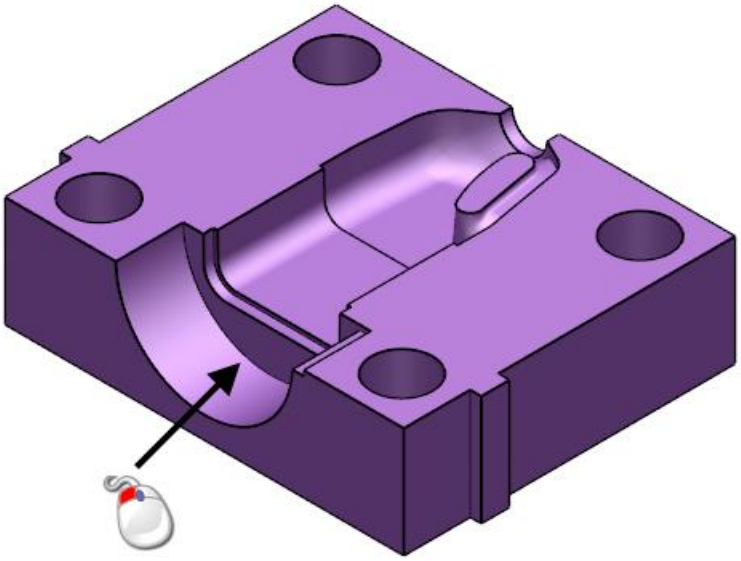

2 Click **Paint triangles** .

The **Paint Triangles** dialog is displayed.

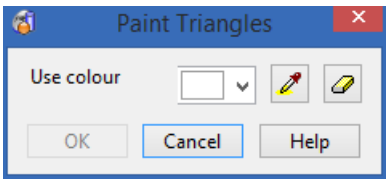

3 Click **Select triangle area to discontinuity** .

4 Click **Cyan** from the **Use colour** drop-down list.

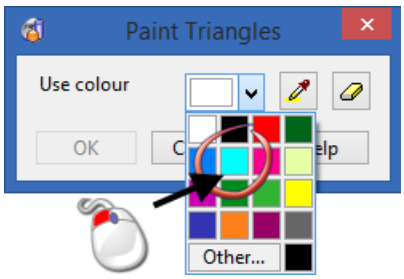

5 Click the mesh.

The selected triangles are coloured cyan.

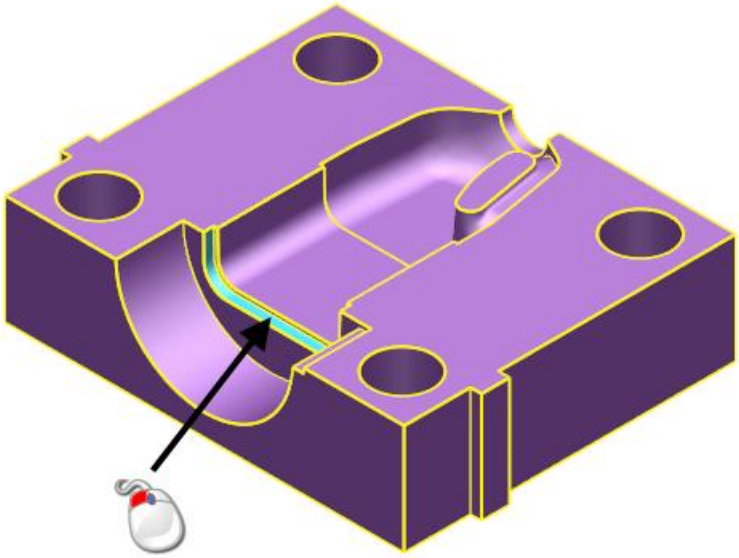

6 Click **Pink** from the **Use colour** drop-down list.

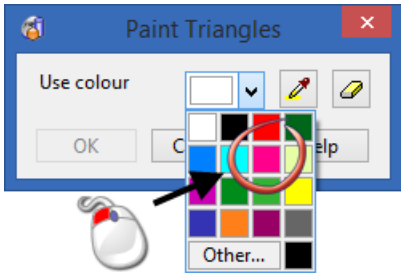

7 Click the mesh.

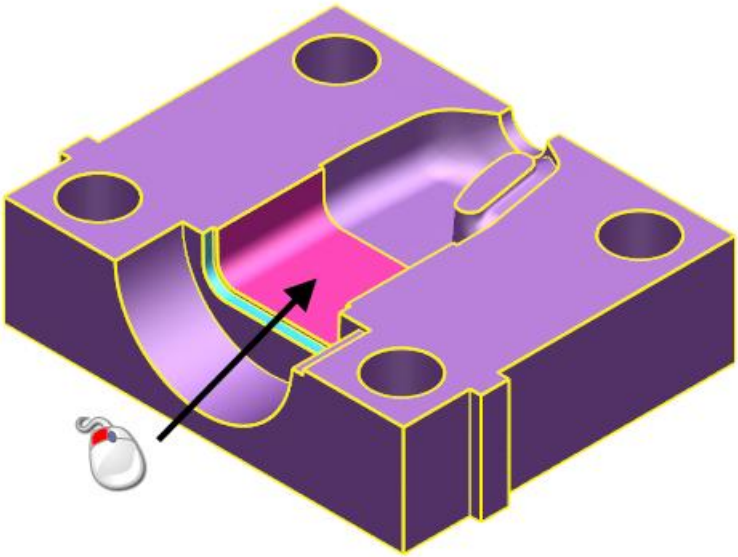

8 Click **Green** from the **Use colour** drop-down list.

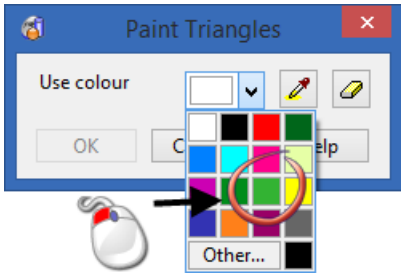

9 Click the mesh.

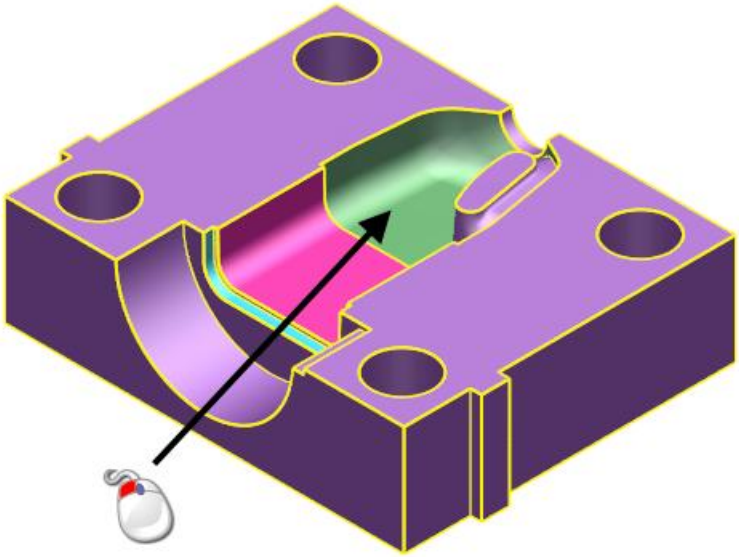

10 Click **Orange** from the **Use colour** drop-down list.

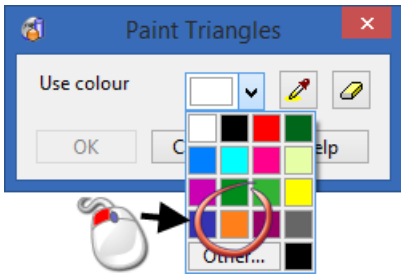

11 Click the mesh.

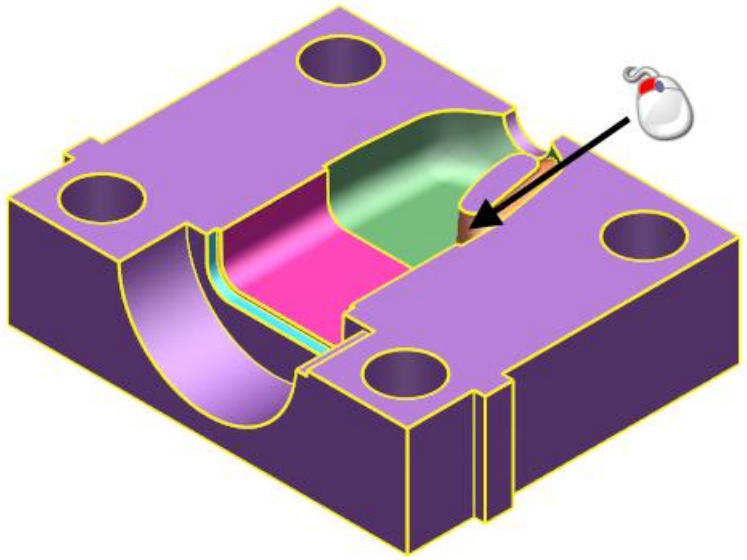

12 Click **OK**.

5. Divide the mesh by colour

1 Click **Divide the mesh into multiple meshes by colour** from the flyout.

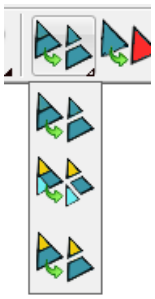

Each coloured area of triangles is divided from the main mesh to create a separate mesh.

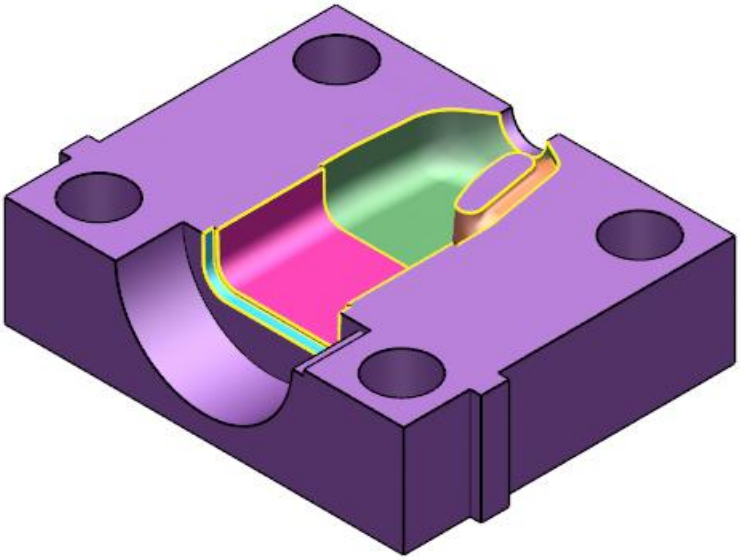

2 Click anywhere in the graphics window to deselect the model.

6. Shrink-wrap surfaces to a mesh

1 Click the green mesh.

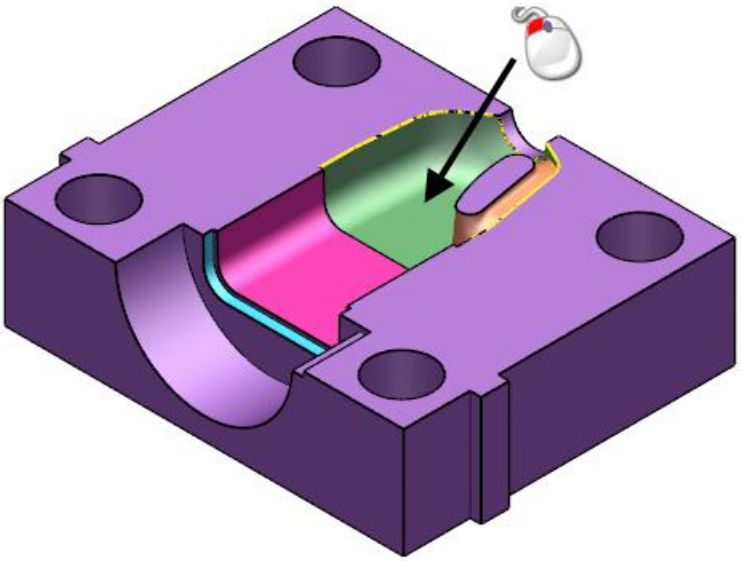

2 Click **Shrink-wrap** .

The **Shrink-wrap Mesh** dialog is displayed.

3 Enter a value of **55** in the **U-direction control points** box.

4 Enter a value of **45** in the **V-direction control points** box.

5 Click **Preview**.

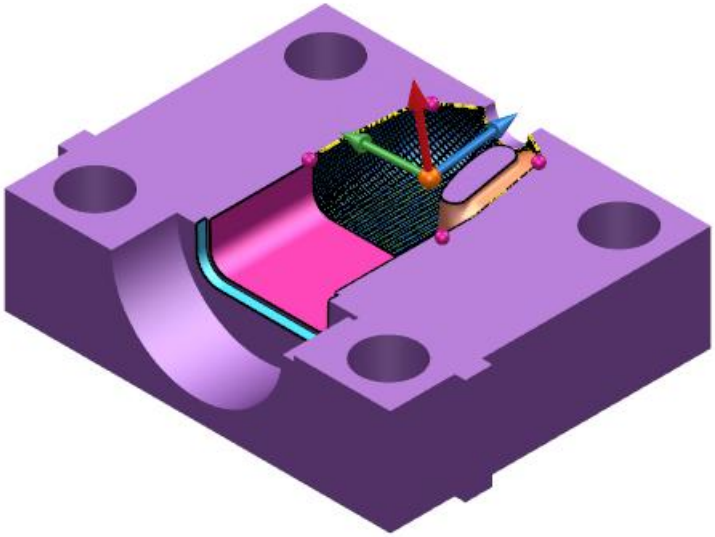

6 Click **OK**.

7 Click **Quick select all surfaces** .

8 Move the cursor over Level **1**.

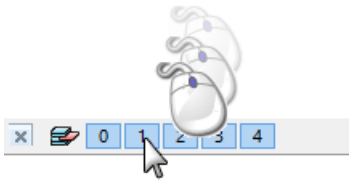

9 When the cursor is in position click the middle mouse button .

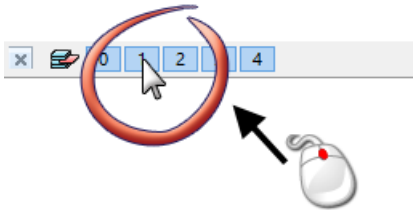

The surface is now moved onto Level **1**.

7. Use Smart Surfacer to create a surface

1 Click the orange mesh.

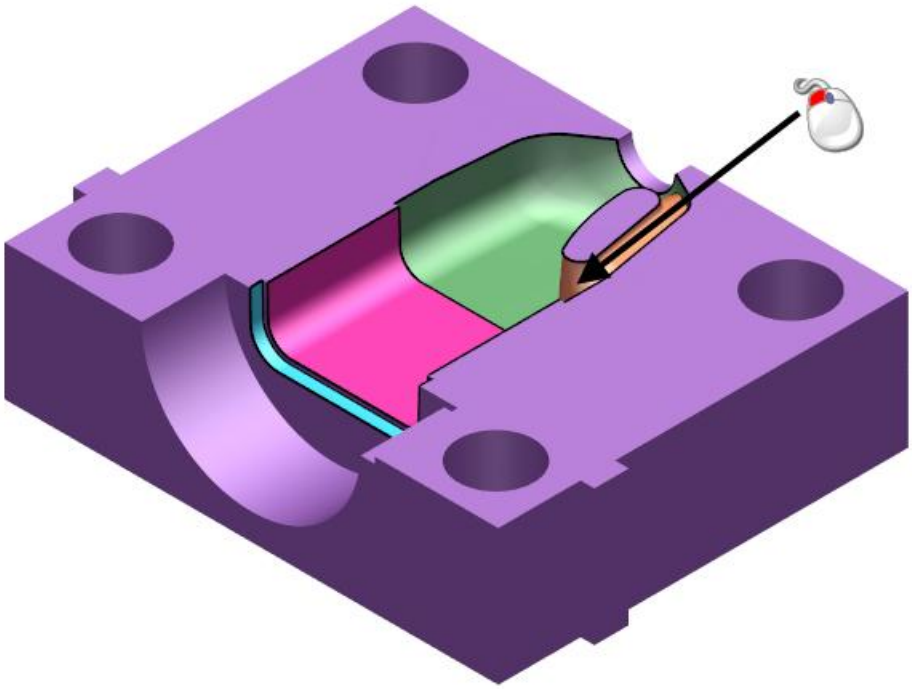

2 Click **Curve** .

3 Click **Create curves from mesh boundaries** .

The **Curve Options** dialog is displayed.

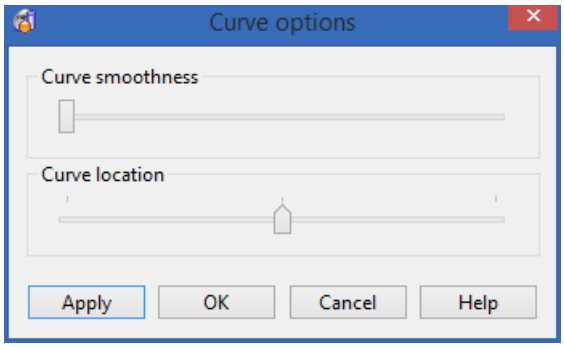

4 Click **OK**.

5 Click **Quick select all wireframes** .

6 Hold down the **Shift** key and click the orange mesh.

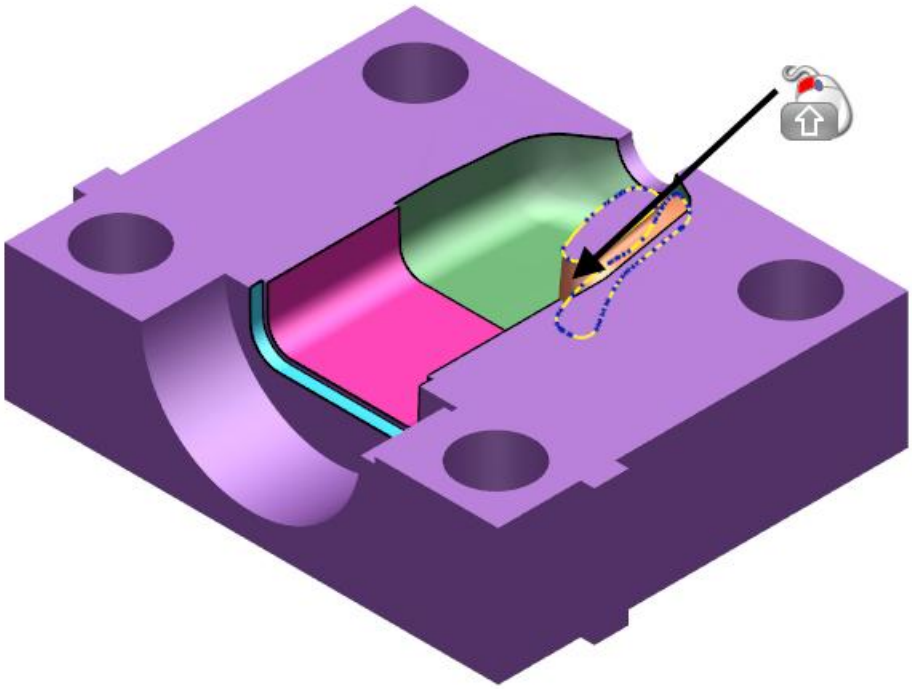

7 Click **Surface** .

8 Click **Smart Surfacer** .

The **Smart Surfacer** dialog is displayed.

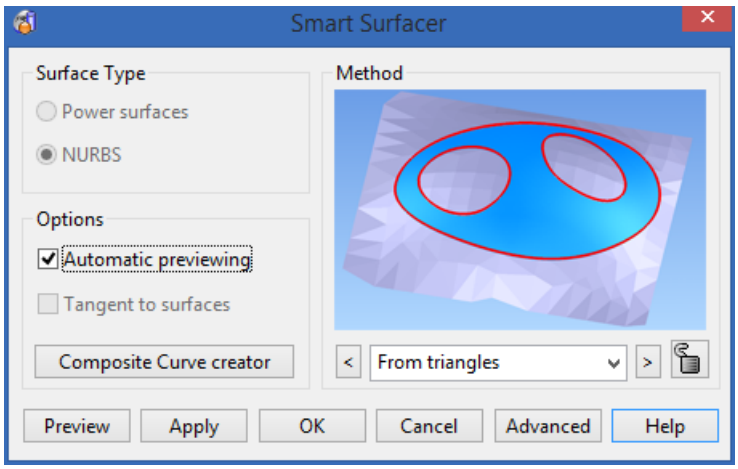

It has correctly selected the **From triangles** method.

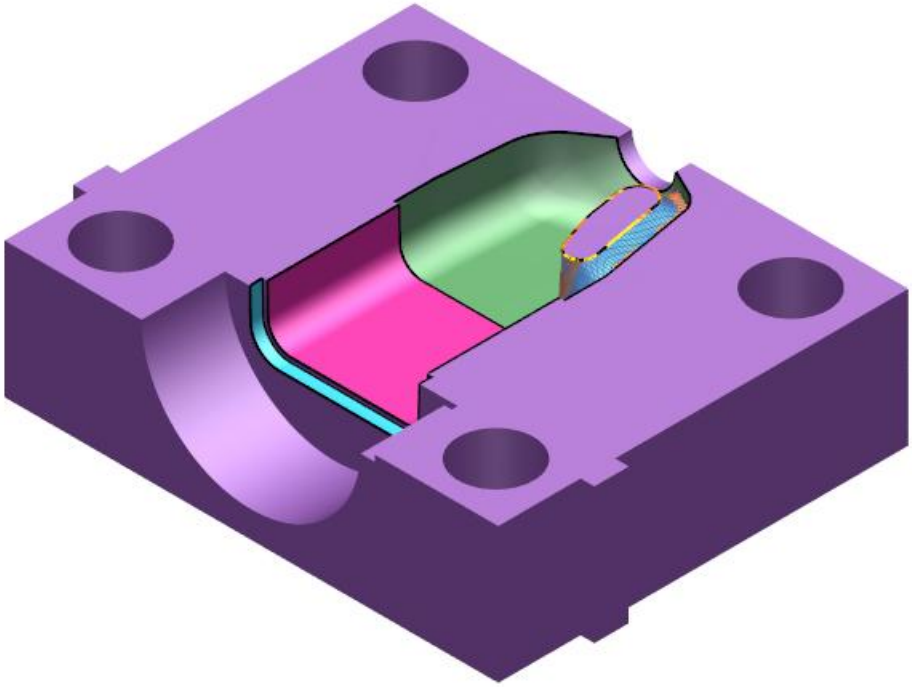

9 Click **OK**.

10 Click **Quick select all wireframes** .

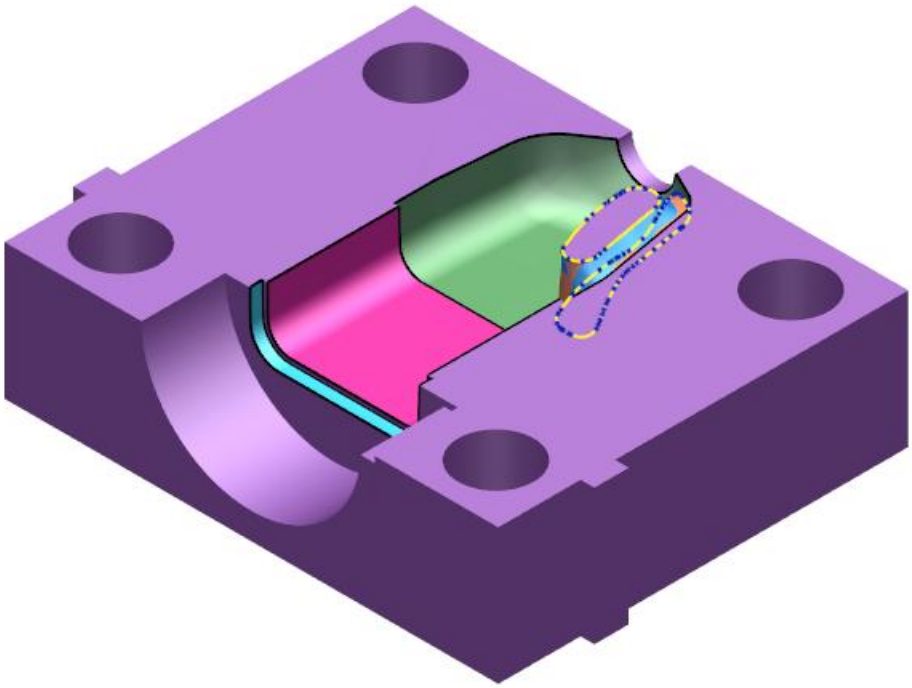

11 Click **Delete** .

12 Click **Quick select all surfaces** .

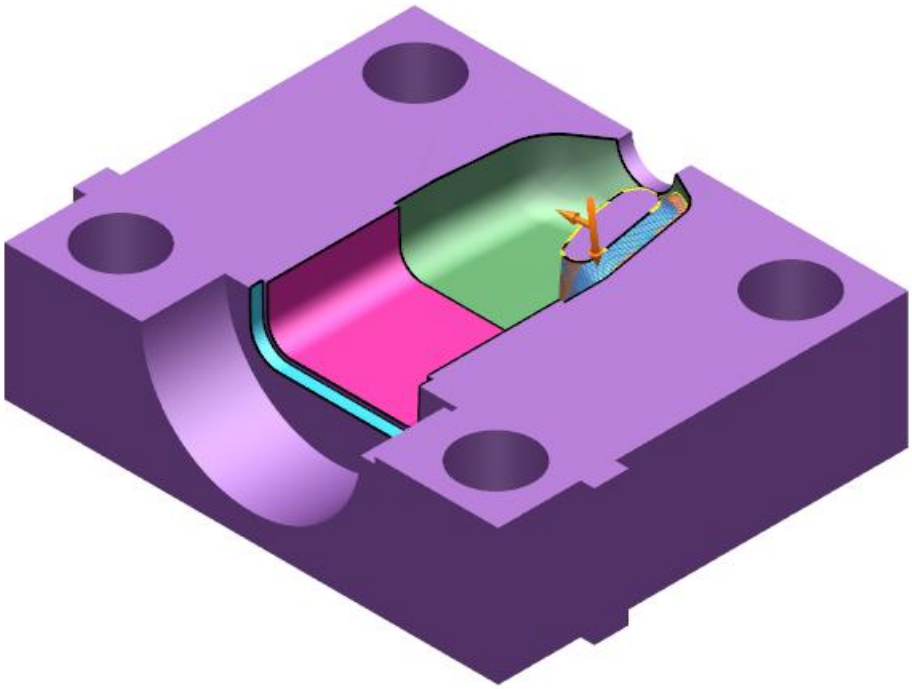

13 Move the cursor over Level **1**.

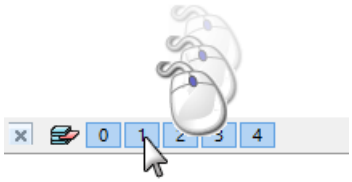

14 When the cursor is in position click the middle mouse button .

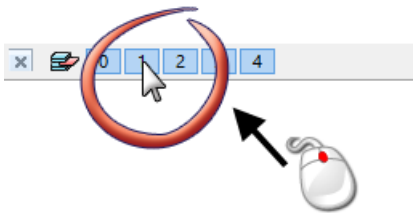

The surface is now moved onto Level **1**.

Manually creating surfaces from meshes

8. Create oblique curves from the meshes

1 Click **View from Top** .

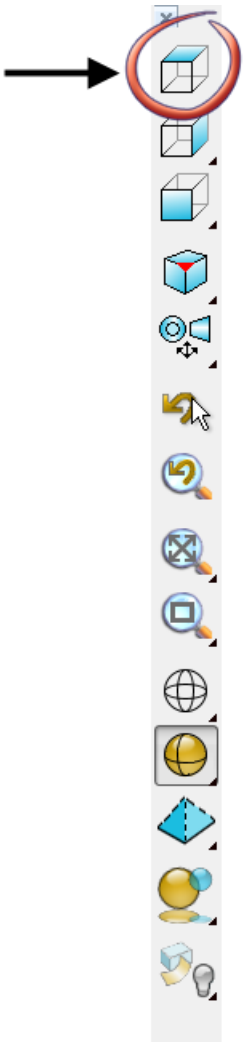

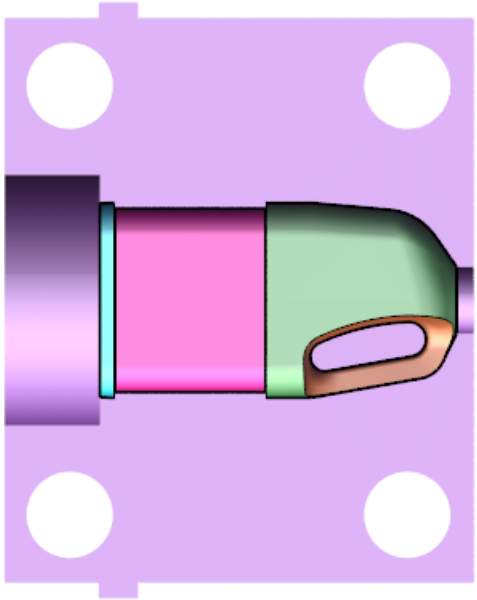

2 Click the cyan mesh.

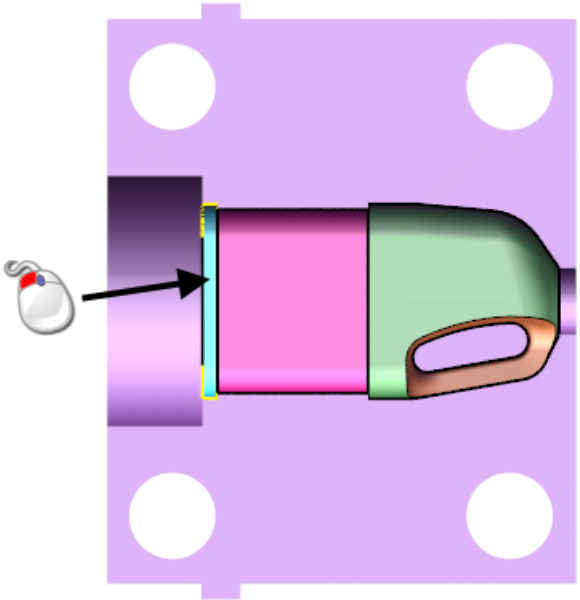

3 Click **Curve** .

4 Click **Create an oblique curve** .

5 From the **Status Bar** at the bottom of the screen, click the **X** principal plane.

6 Click **Cursor pick.**

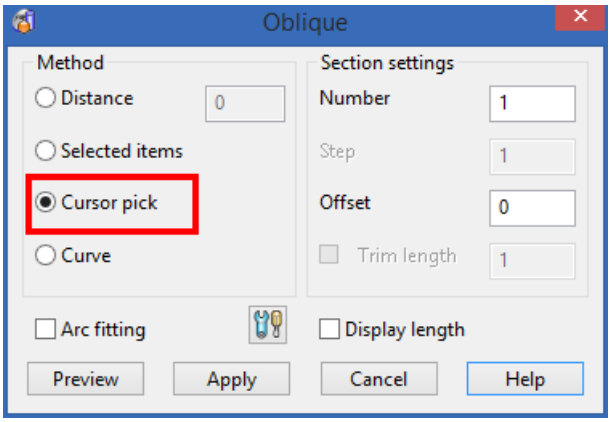

7 Click on the mesh in the position shown below.

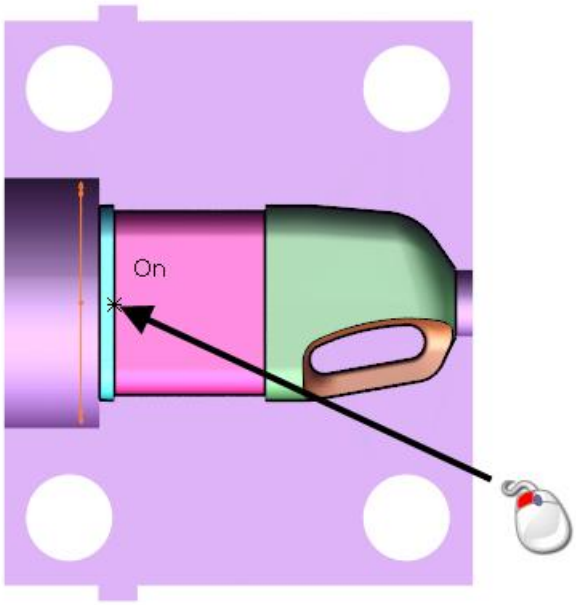

8 Click **Apply.**

9 Click **Cancel.**

10 Click the pink mesh.

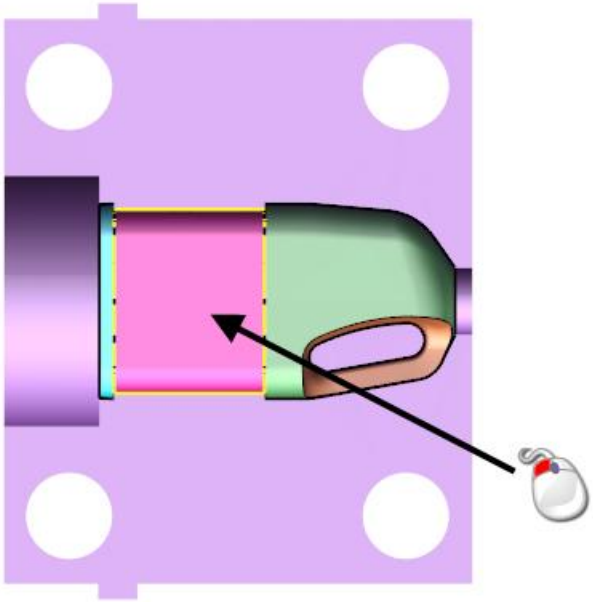

11 Click **Create an oblique curve** .

12 Click **Cursor pick.**

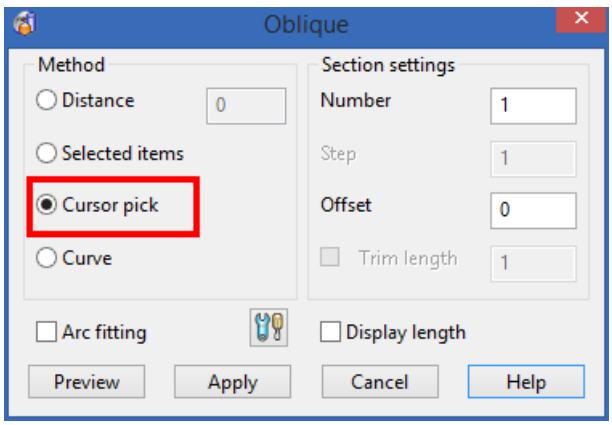

13 Click on the mesh in the position shown below.

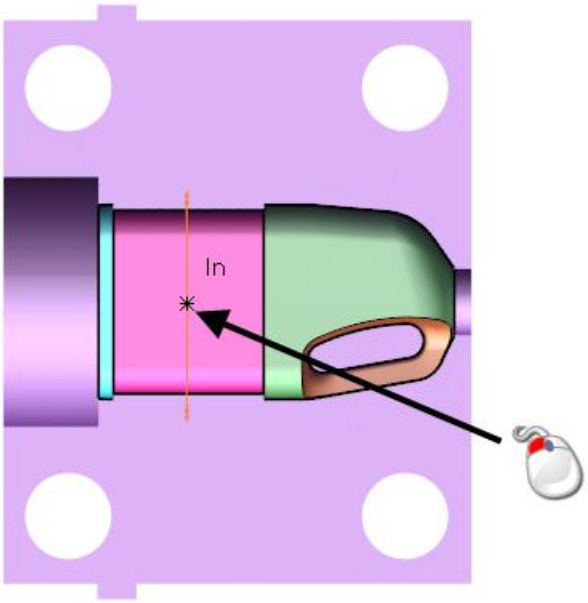

14 Click **Apply**.

15 Click **Cancel.**

16 Click anywhere in the graphics window to deselect the model.

9. Create surface extrusion - 1

1 Click the composite curve.

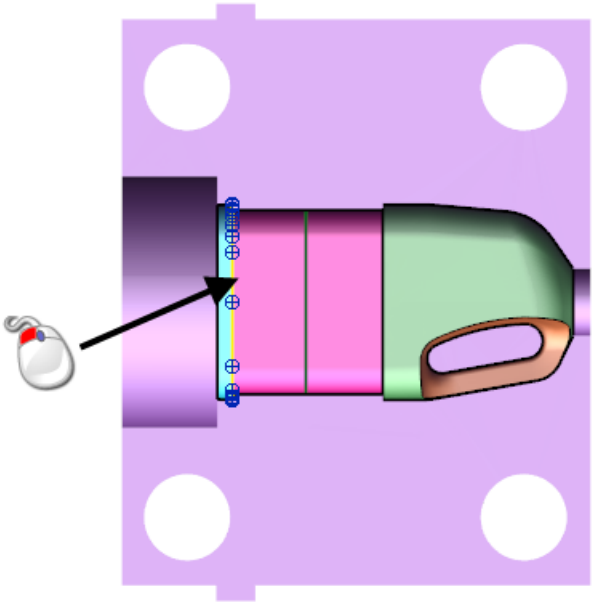

2 Click **Surface** .

3 Click **Extrusion** .

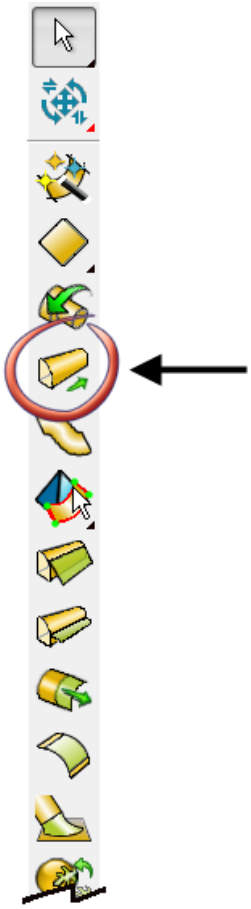

4 Double click the surface extrusion.

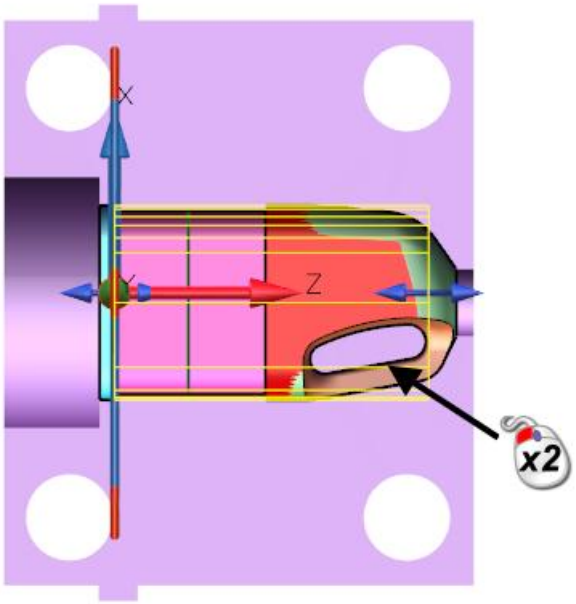

5 Enter a value of **2** in Length 1

6 Enter a value of **12** in Length 2

7 Click **Reverse** .

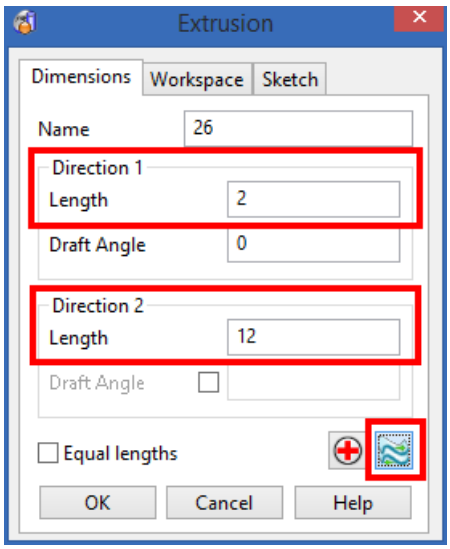

8 Click **OK**.

9 Click anywhere in the graphics window to deselect the model.

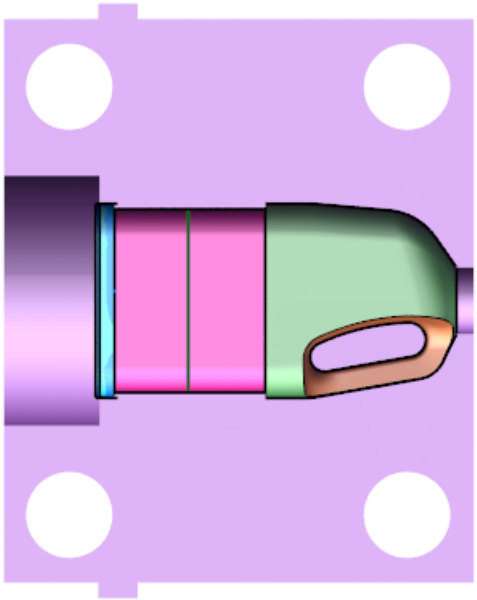

10. Create surface extrusion - 2

1 Click the composite curve.

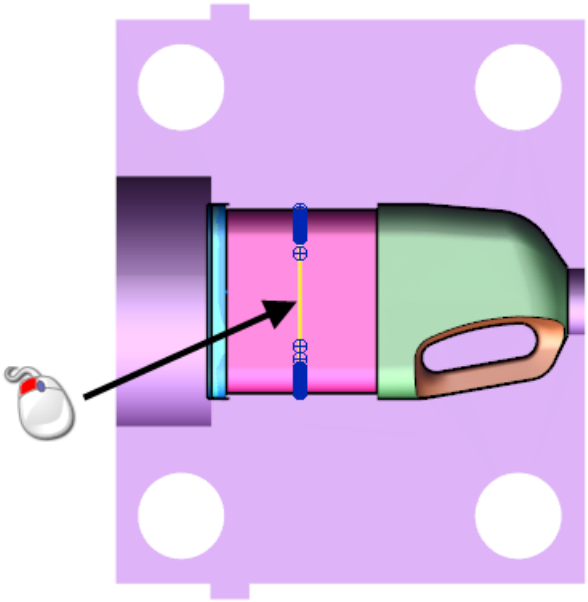

2 Click **Surface** .

3 Click **Extrusion** .

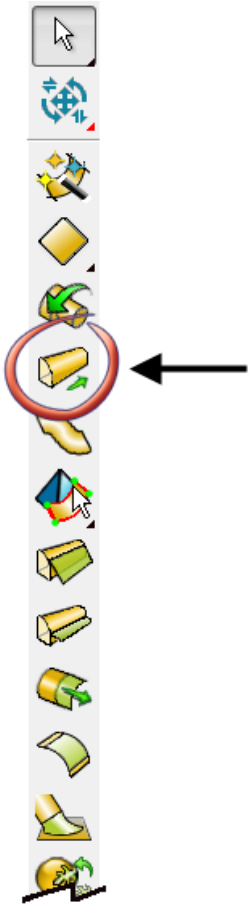

4 Double click the surface extrusion.

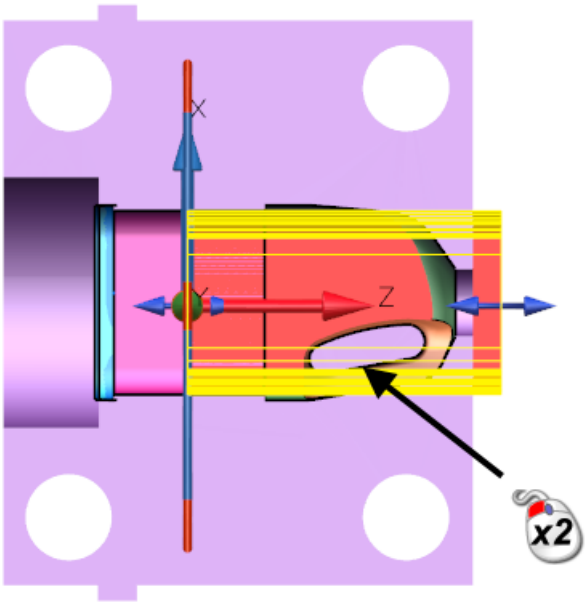

5 Enter a value of **52** in Length 1

6 Click **Equal lengths**.

7 Click **Reverse** .

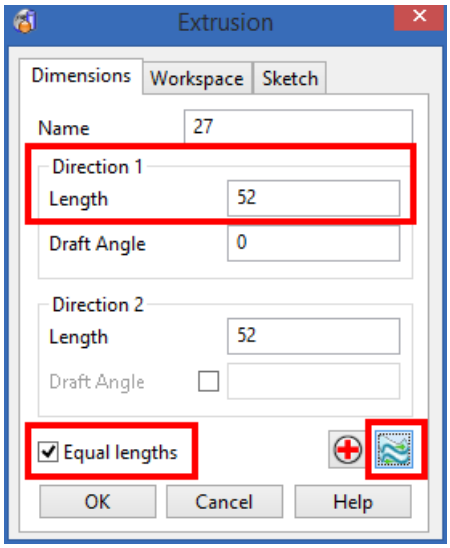

8 Click **OK**.

9 From the **Status Bar** at the bottom of the screen, click the **Z** principal plane.

10 Click anywhere in the graphics window to deselect the model.

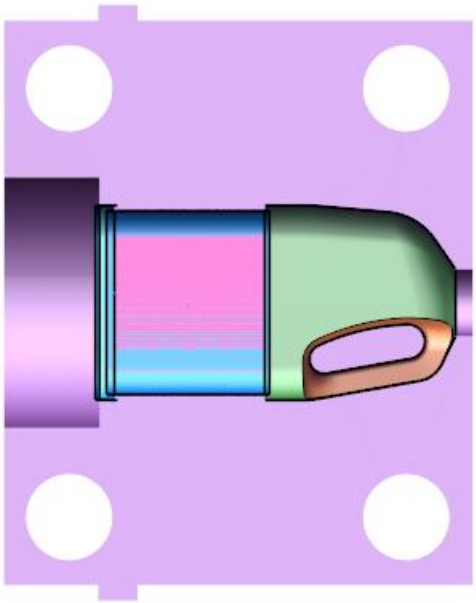

11. Extend the surfaces

1 Click **View ISO1** .

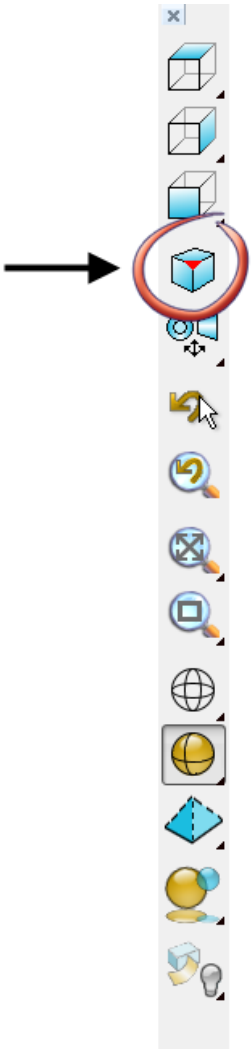

2 Click the first surface extrusion.

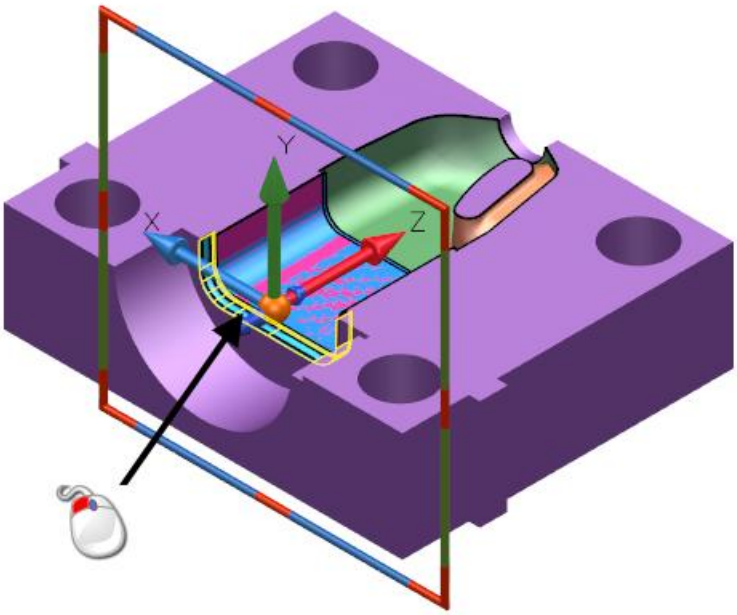

3 Click **Show General Edits Options** .

The General Edits toolbar is displayed.

4 Click **Point Limit** .

The **Limit Point** dialog is displayed.

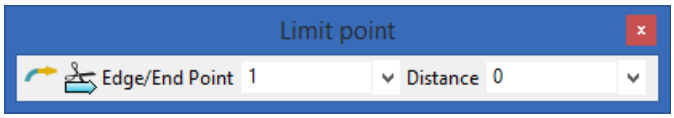

5 Click **Yes**.

6 Enter a Distance of **10**.

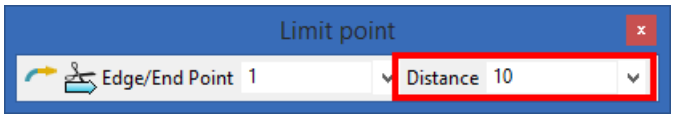

7 Press **Enter**.

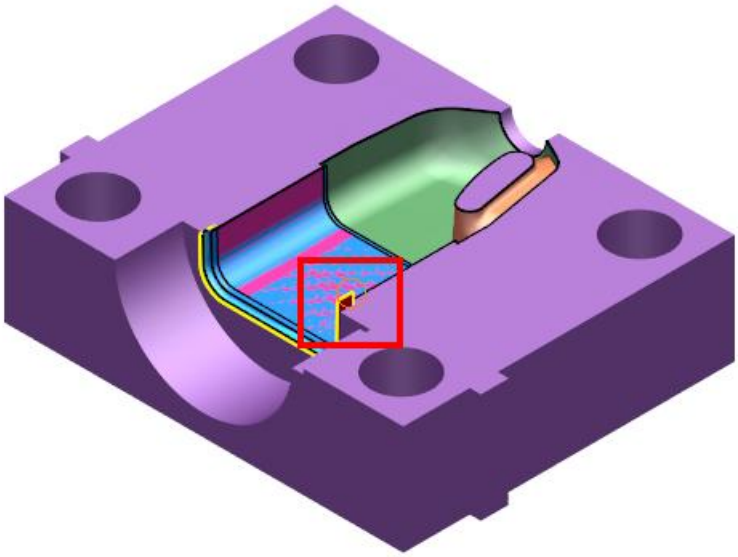

8 Click the **Edge/End point** drop down list and select **3**.

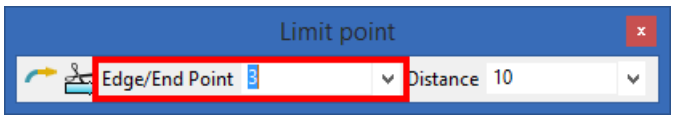

9 Enter a Distance of **10**.

10 Press **Enter**.

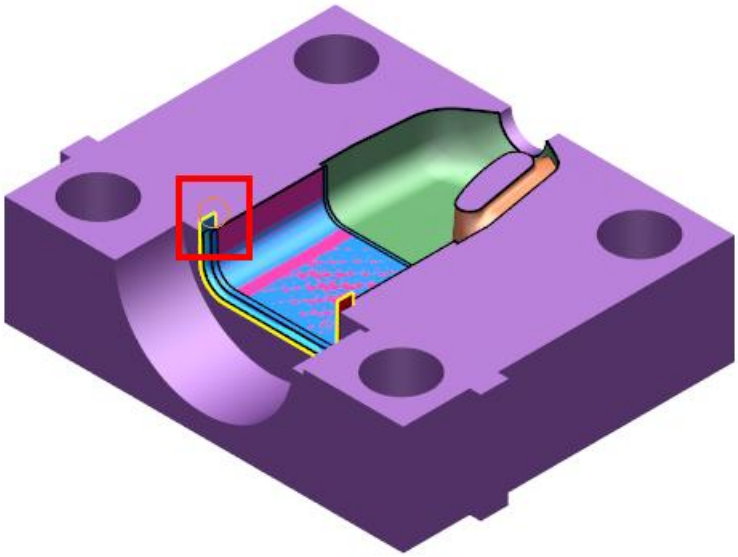

11 Click the second surface extrusion.

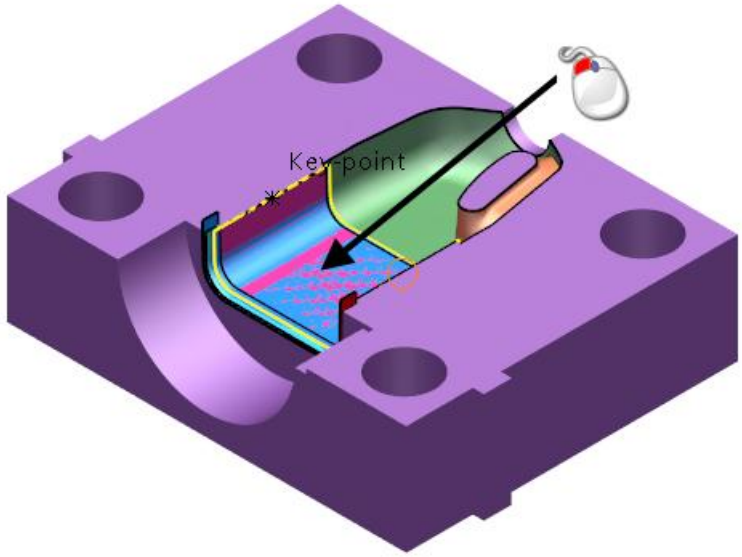

12 Click **Yes**.

13 Enter a Distance of **10**.

14 Press **Enter**.

15 Click the **Edge/End point** drop down list and select **3**.

16 Enter a Distance of **10**.

17 Press **Enter**.

18 Click **Select** .

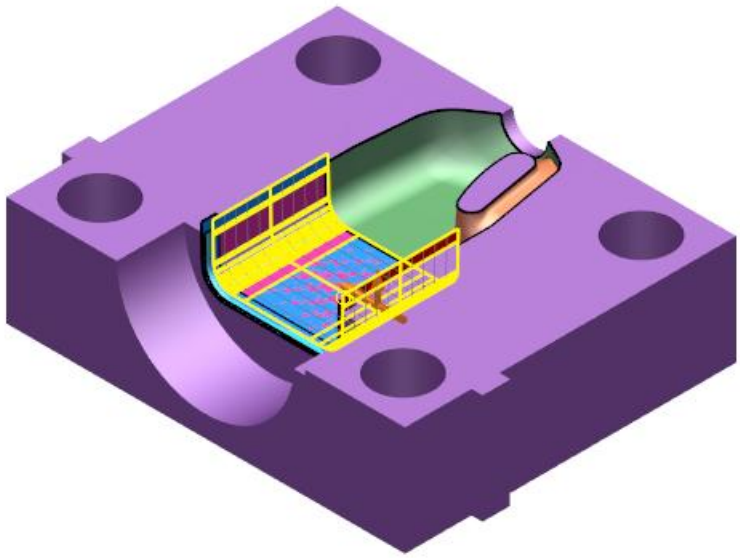

19 Click **Quick select all surfaces** .

20 Move the cursor over Level **1**.

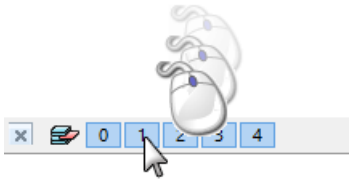

21 When the cursor is in position click the middle mouse button .

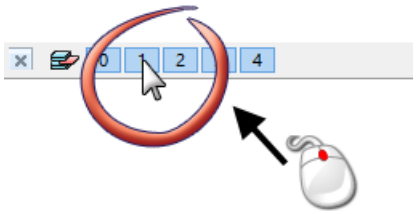

The surfaces are now moved onto Level **1**.

12. Turn the trimming off on a surface

1 Click Level **1** to turn it on.

2 Click Level **4** to turn it off.

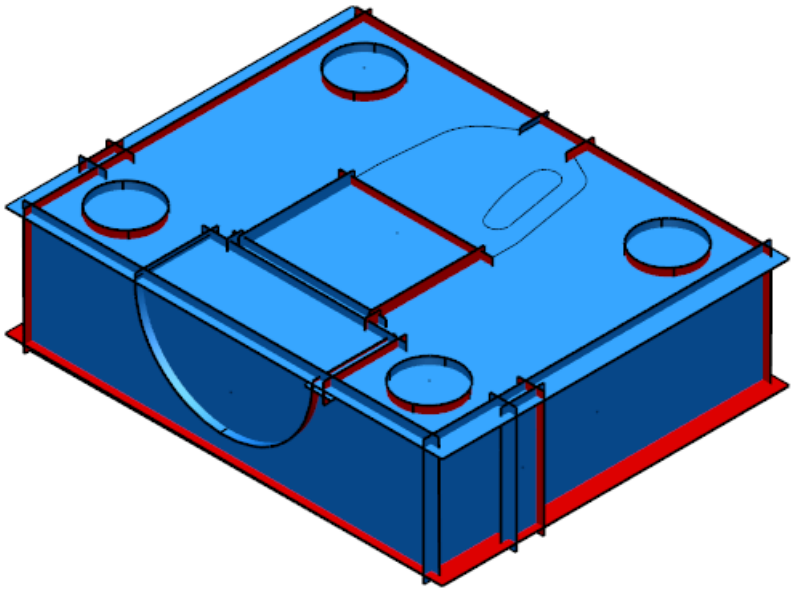

3 Click the shrink-wrap surface.

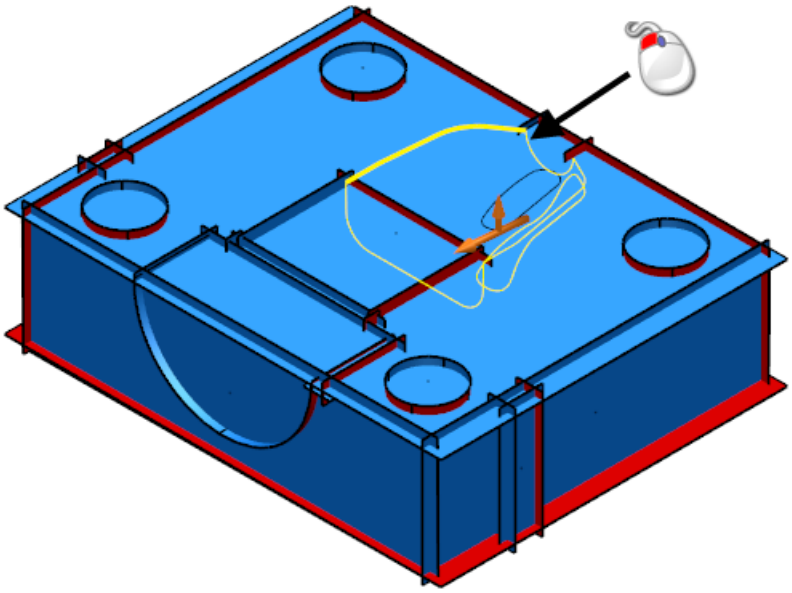

4 Click **Turn trimming OFF** .

5 Click anywhere in the graphics window to deselect the model.

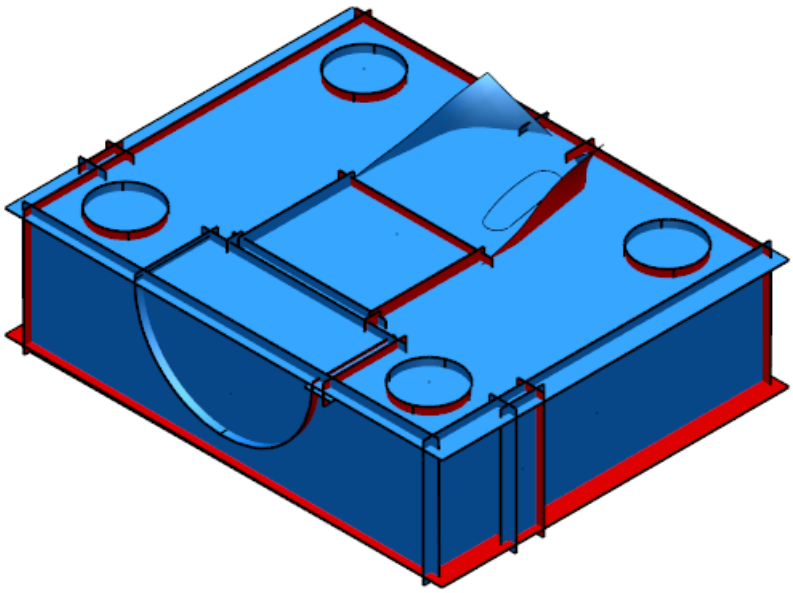

Creating a solid from the surfaces

13. Automatically trim surfaces to create a solid

1 Click **Quick select all surfaces** .

2 Click **Solid** .

3 Click **Automatically trim surfaces and create a solid** from the flyout.

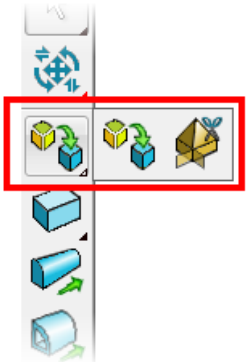

The surfaces are automatically trimmed to each other to form a solid.

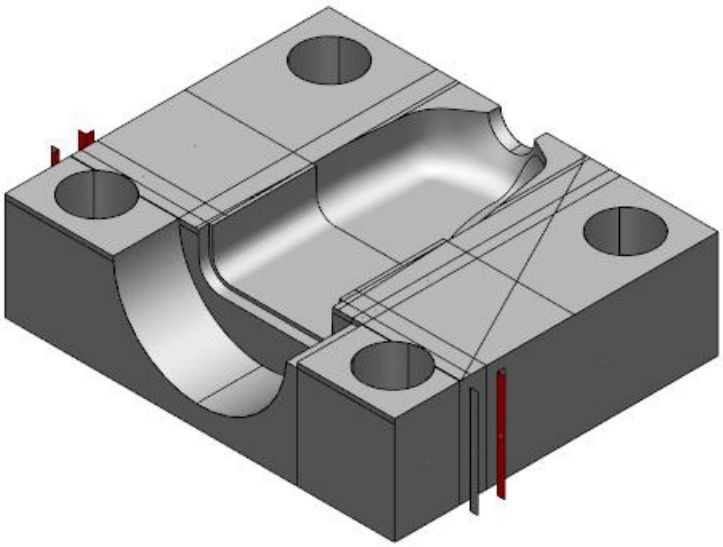

If the wrong trimming solution is chosen the user can manually decide whether to Keep or Delete faces.

4 Hold down the **Shift** key and click the faces at the side of the block.

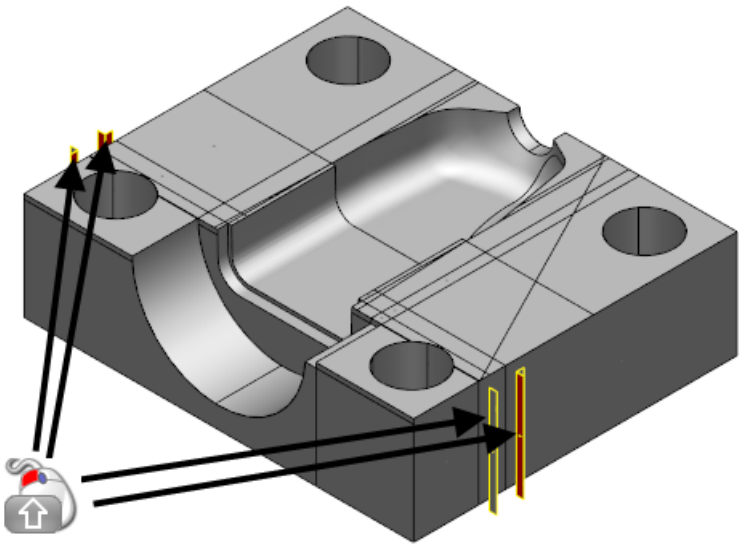

5 Click **Delete**.

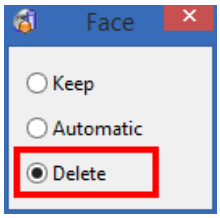

The faces are trimmed again to exclude the faces selected to delete.

6 Hold down the **Shift** key and click the two faces.

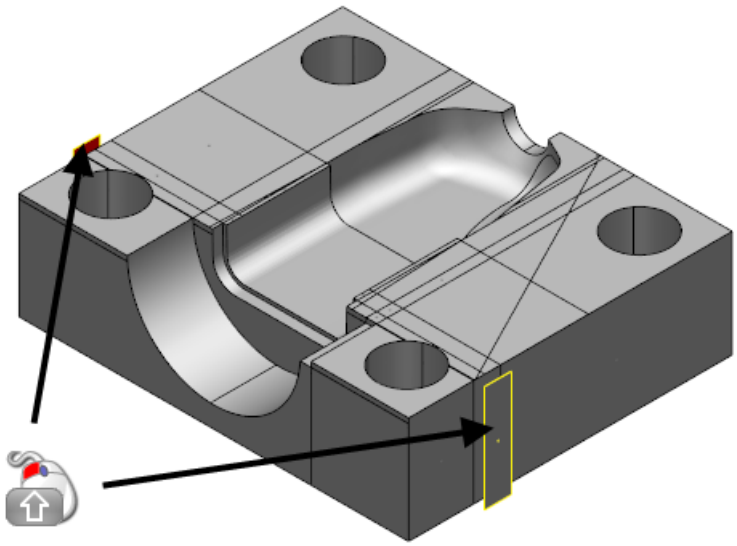

7 Click **Keep**.

Kept faces are displayed in green.

8 Click the face shown below:

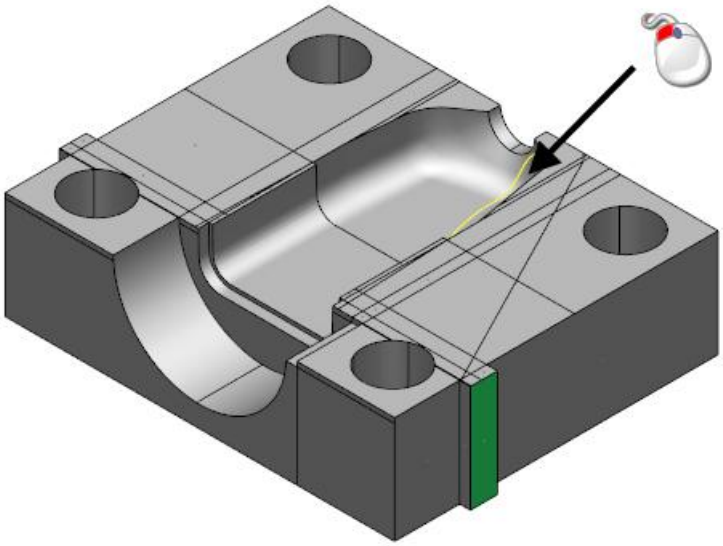

9 Click **Delete**.

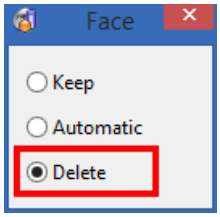

10 Click the face shown below:

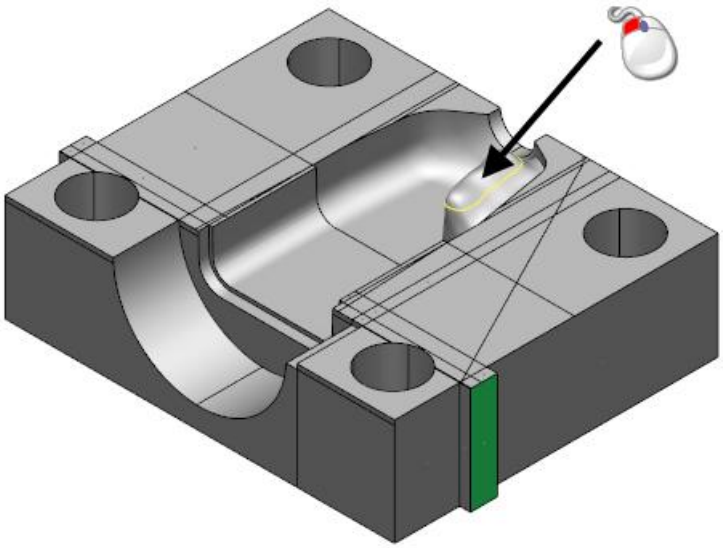

11 Click **Delete**.

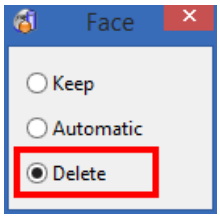

The surfaces are trimmed again and the curved surface is removed.

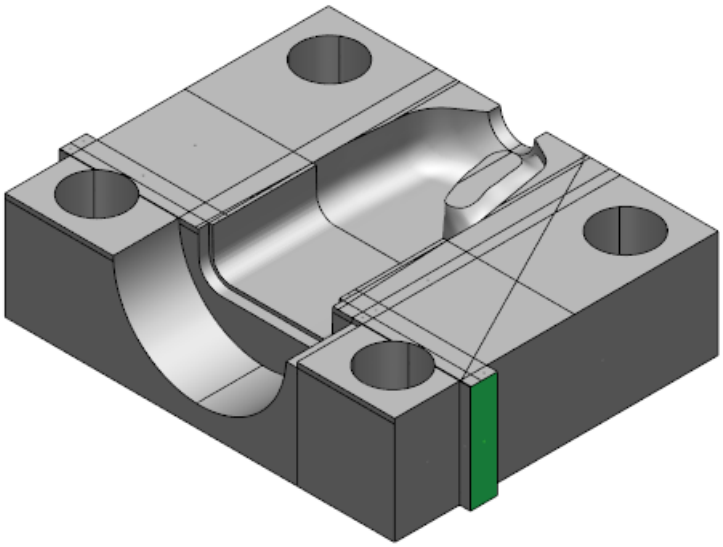

12 Click **OK**.

The surfaces are trimmed and merged together to produce a solid.

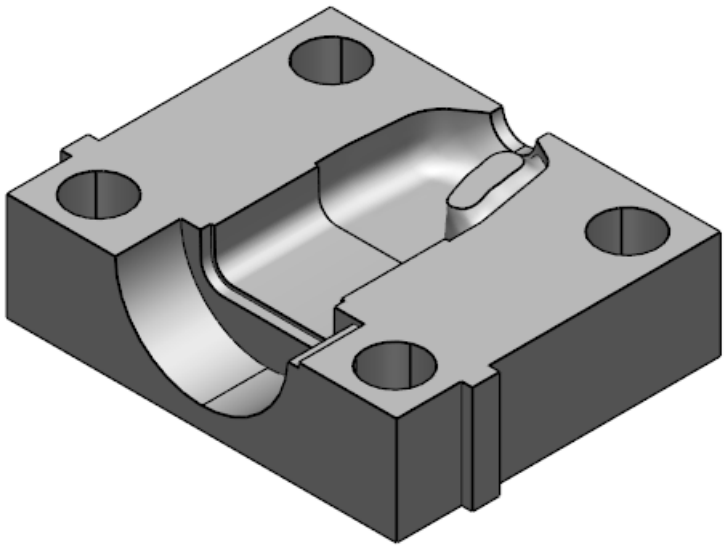

Finishing the solid model

14. Add draft to a vertical face

1 Click the solid.

The solid edit toolbar is displayed.

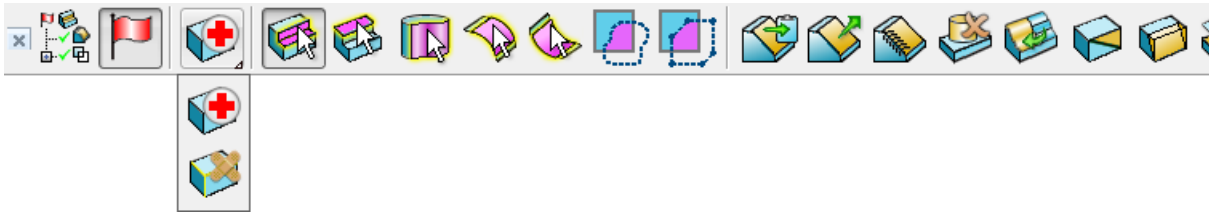

2 Click the face shown below:

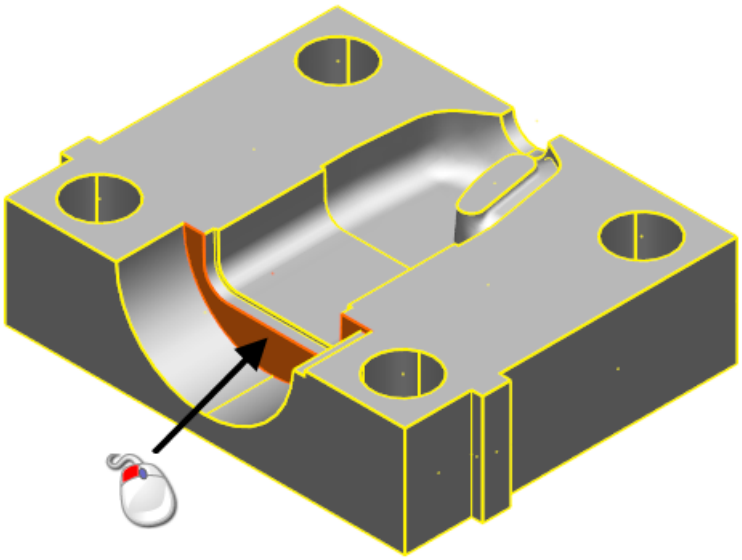

3 Click **Draft faces of the selected solid**

The Draft faces dialog is displayed.

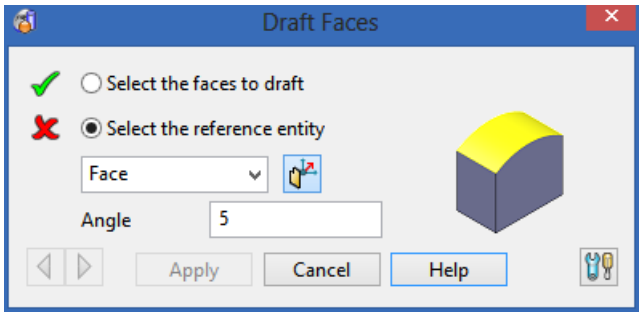

4 Click the top face of the model as the reference entity.

The preview draft graphics are drawn on the model.

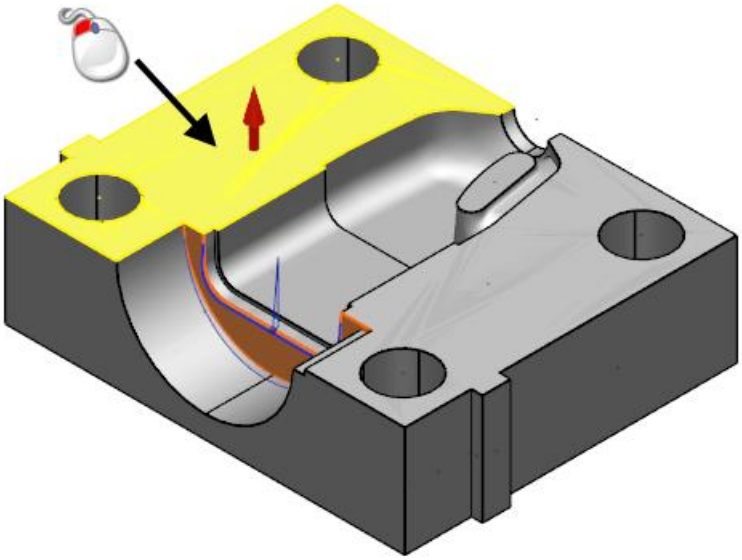

5 Enter an **Angle** of **5** degrees.

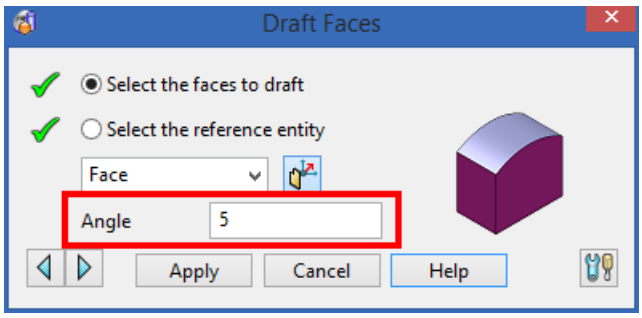

6 Click **Apply**.

7 Click **Cancel.**

8 Click anywhere in the graphics window to deselect the model.

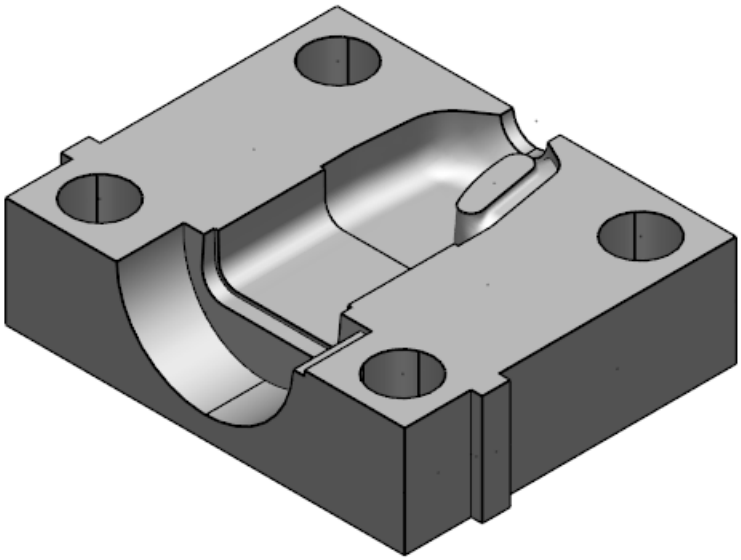

15. Add solid fillets

1 Click the solid.

2 Click on the **Solid edit** toolbar to make the solid the active solid.

The button now displays to show the solid is active.

3 Click **Feature** .

4 Click **Create solid fillet** .

The Fillet dialog is displayed.

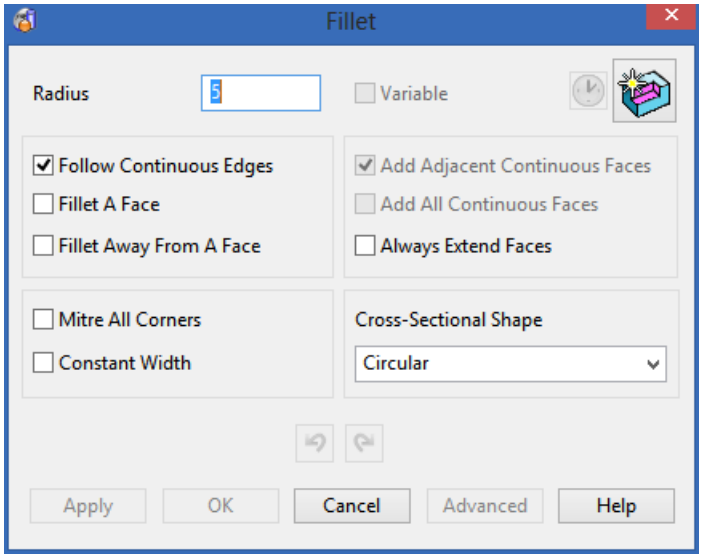

5 Enter a **Radius** of **2**.

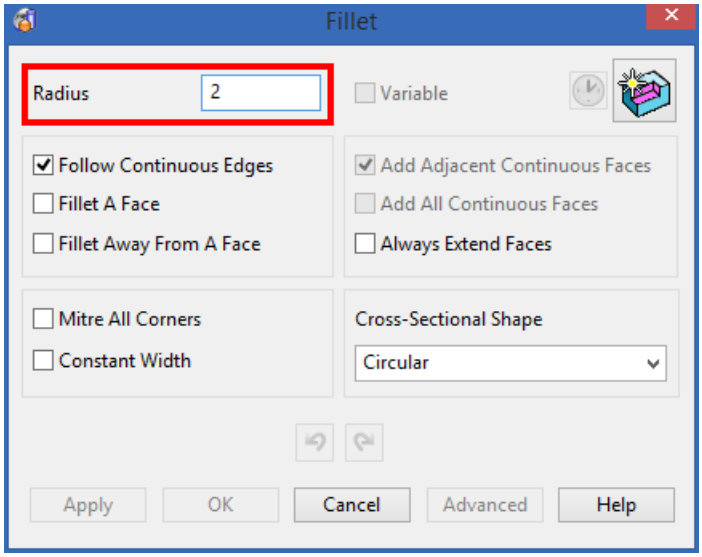

6 Click **Zoom to box Mode** .

7 Click the left mouse button and drag a box, as shown:

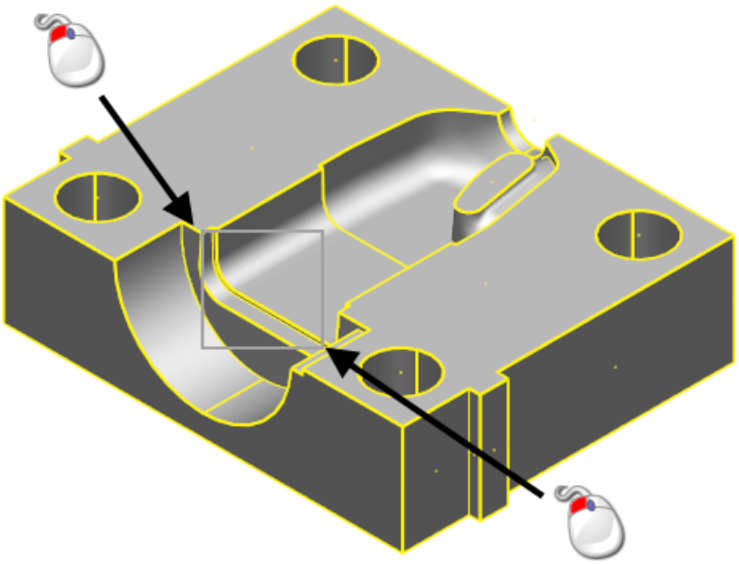

8 Click the fillet track.

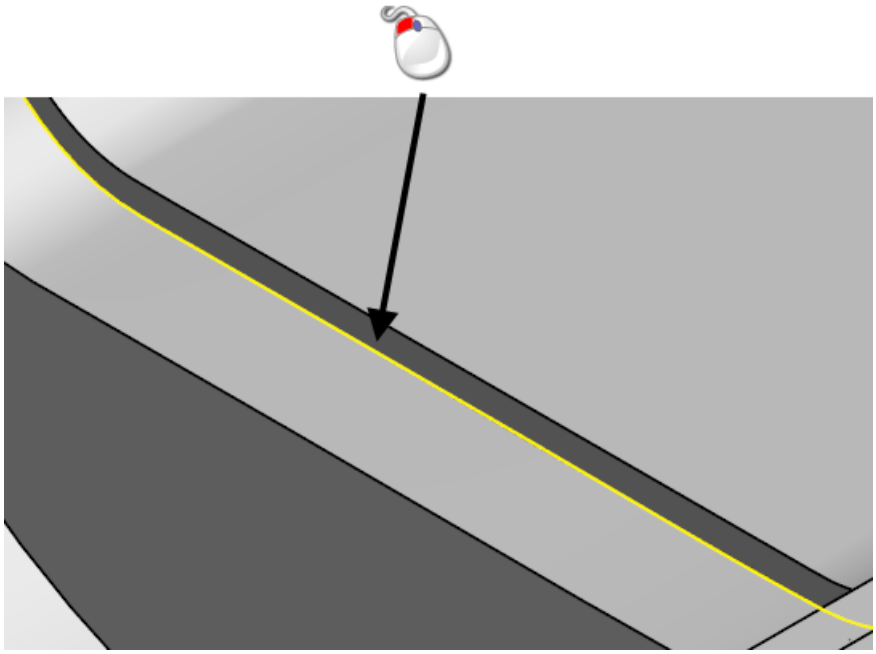

9 Click **Apply**.

10 Click the fillet track.

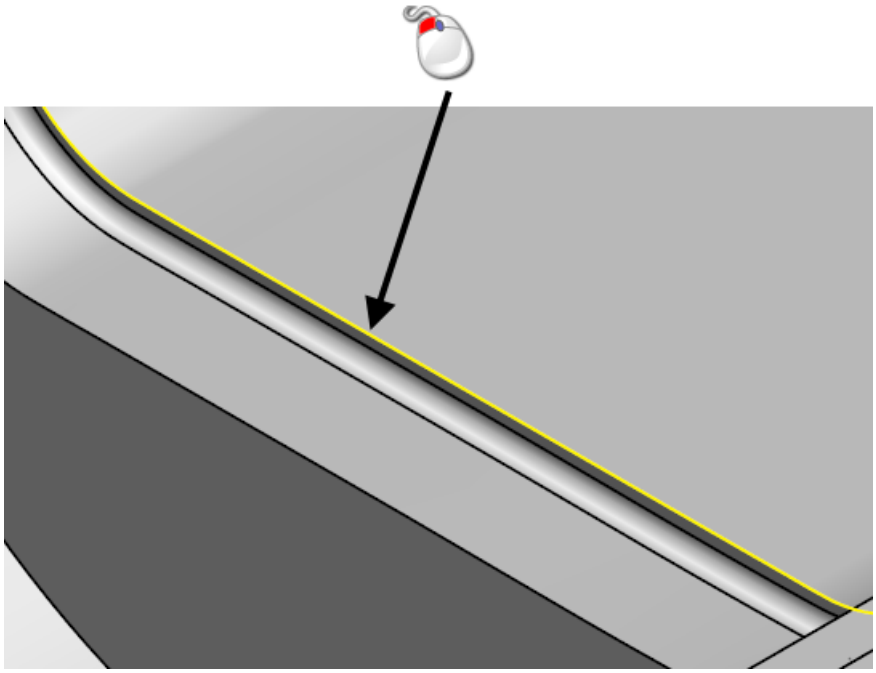

11 Click **Apply**.

12 Click **View ISO3** .

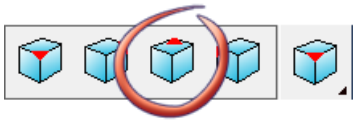

13 Click **Zoom to box Mode** .

14 Click the left mouse button and drag a box, as shown:

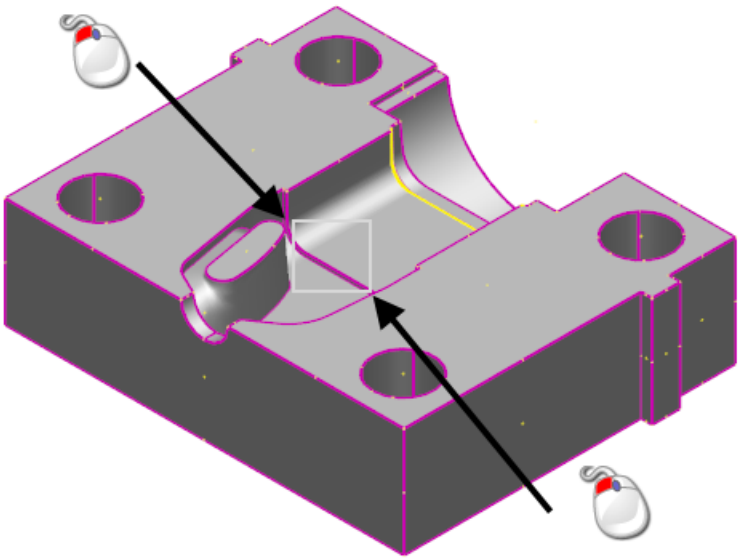

15 Click the fillet track.

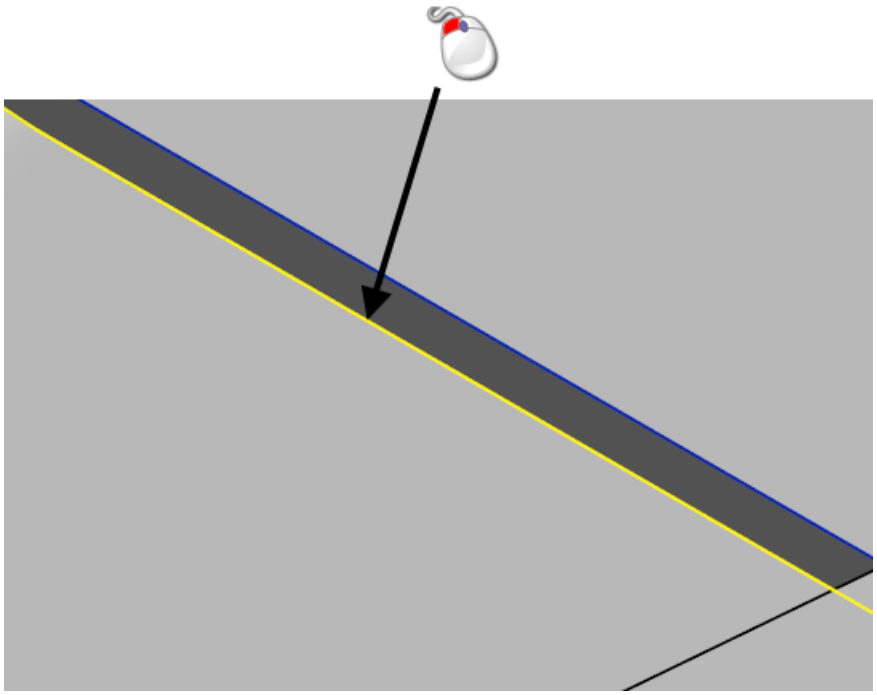

16 Click **Apply**.

17 Click the fillet track.

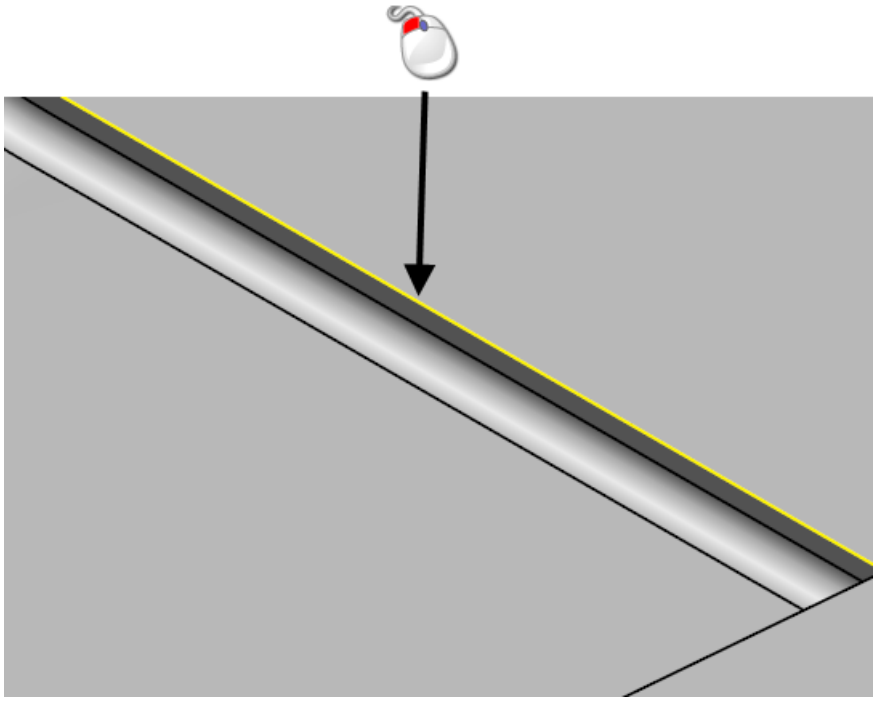

18 Click **Apply**.

19 Click **View ISO4** .

20 Enter a **Radius** of **4**.

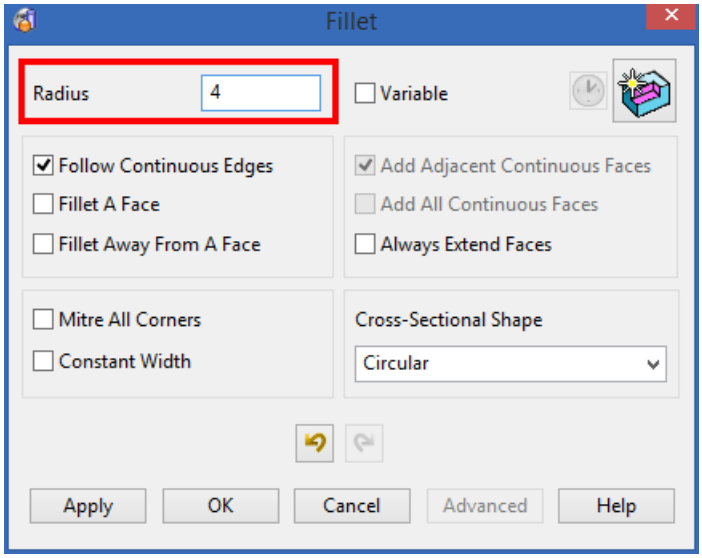

21 Click the fillet track.

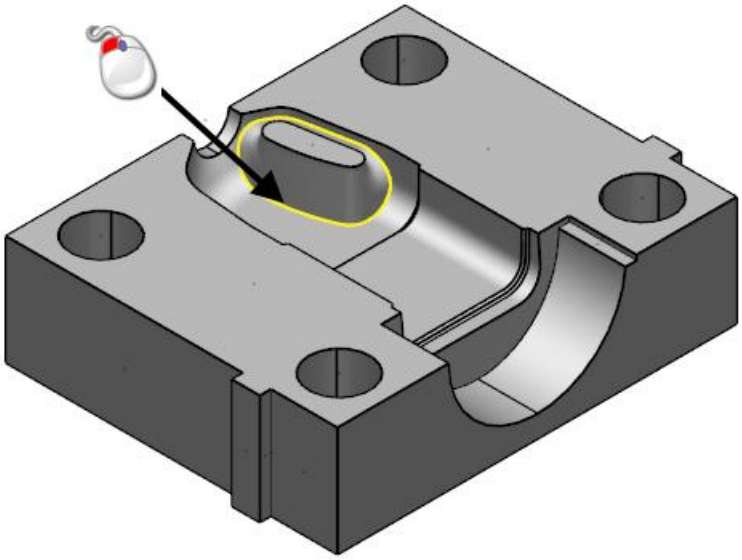

22 Click **OK**.

23 Click anywhere in the graphics window to deselect the model.

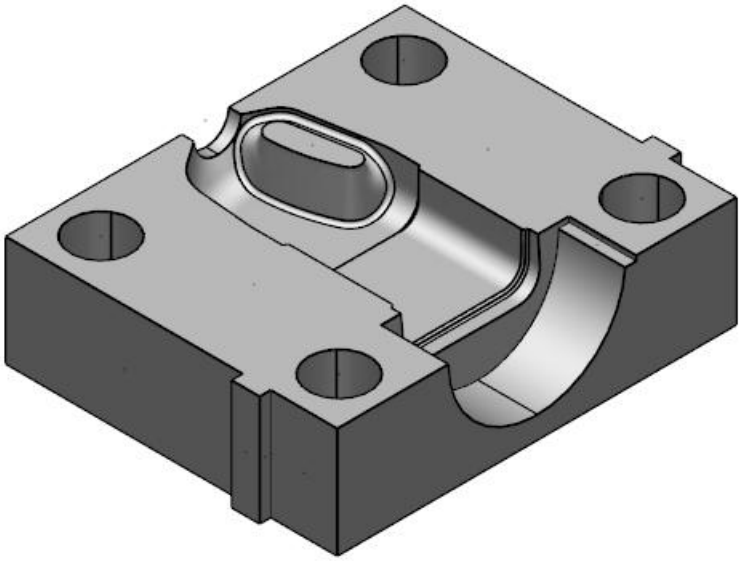

Summary

You have reverse engineered a model from a mesh.

You have done the following:

- Created surfaces from the mesh using automatic segmentation.
- Added surfaces to levels.
- Selected areas of the mesh and added colour.
- Divided the mesh using the colours.
- Created surfaces from the mesh using shrink-wrap.
- Created curves from the mesh.
- Created surface extrusions.
- Extended the surfaces so they will trim correctly.
- Turned the trimming off a surface so it will trim correctly.
- Created a solid using the auto-trim from surfaces.
- Added draft to a vertical face of the model.
- Added fillets to finish the model.